EN

ALLIED MACHINE & ENGINEERING | WOHLHAUPTER®

Holemaking Solutions for Today's Manufacturing



Wohlhaupter® MultiBore® System Tools

CATALOGUE

Drilling

Boring

Reaming

Burnishing

Threading

Specials

www.alliedmachine.com

The MVS Connection

Wohlhaupter® GmbH developed the world's first modular tooling system called MultiBore® in 1973. The modular tooling system was designed to be compatible with all machine spindles, and its connection features a triple point clamp (Figure 1). The triple point clamp (1, 2, & 3) maximizes rigidity and creates an accuracy less than 3µm when the tool is changed.

- Ensures high axial clamping forces on mating surfaces
- Provides maximum rigidity
- Threaded taper pins for precise cutter positioning

Figure 1

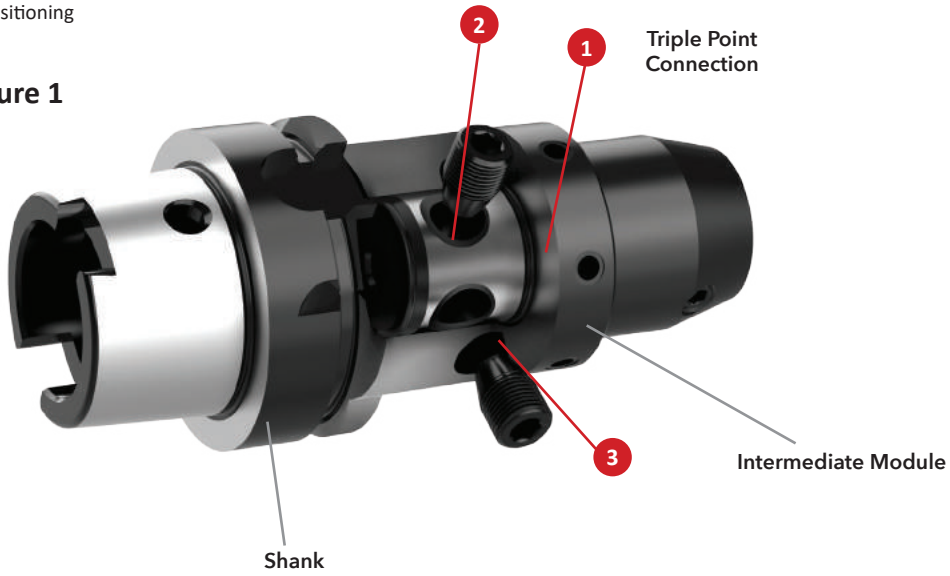

MVS Connection Color Guide

Wohlhaupter® created a unique color-coding system to find the right connections for different tool components quickly and easily. Each Wohlhaupter / MVS connection size has its own color-coding. Simply match the colors to select the correct combination of tool components (Figure 2). We've also incorporated the color-coding system into our packaging to reduce setup time even more.

Figure 2

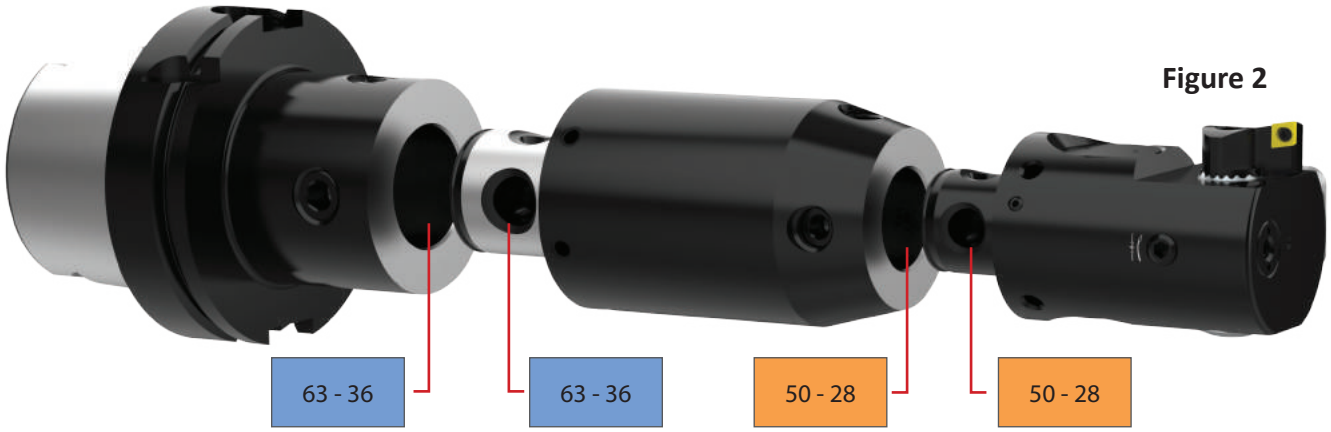

M 8	19.5 - 22	22 - 11	25 - 14	32 - 18	40 - 22	50 - 28	63 - 36	80 - 36	100 - 56	D 40	D 60

MVS Connection Example - Selecting the Correct Intermediate Module

Example Machining Parameters

Hole Diameter: 75.00mm (2.942")
Hole Depth: 200.00mm (7.874")
Machine Spindle: HSK-A 100 DIN 69893

1 Select your boring tool

- Example: 464 Balanced Boring Head

2 Select the tool that meets the required boring range

- MVS connection: 50 - 28
- *A* = 65.00mm - 83.00mm (2.559" - 3.268")
- Part No. : **464006**



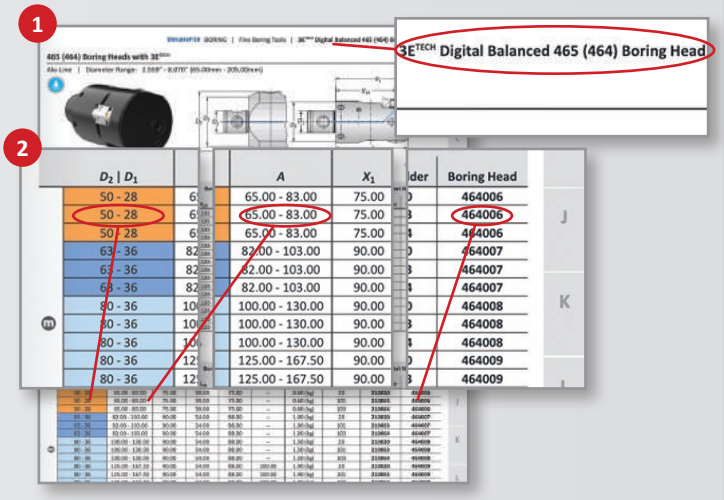

3 Select the master shank that fits your spindle

- Machine spindle: DIN 69893 HSK

4 Choose the connection that fits your application

- MVS connection: 63 - 36
- Part No. : **245015**

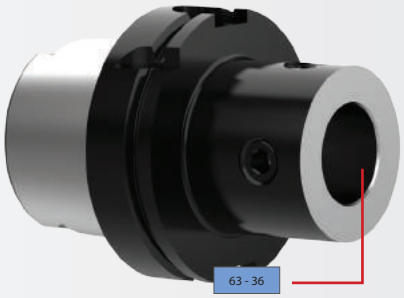

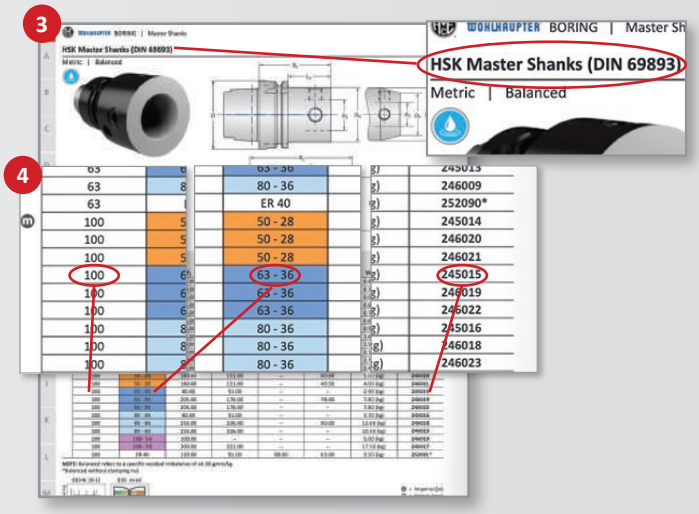

5 Select the correct intermediate module

Must meet the hole depth requirements and MVS connections for both the boring head and shank

Hole depth: 200.00mm (7.874")
Boring tool 464006 length (X_1): 75.00mm (2.953")
Master shank 245015 length (L_1): 51.00mm (2.008")
Minimum required length of adapter: 74.00mm (2.913")
Boring tool 464006 MVS connection: 50 - 28
Master shank 245015 MVS connection: 63 - 36
Adapter Part No.: **119025**

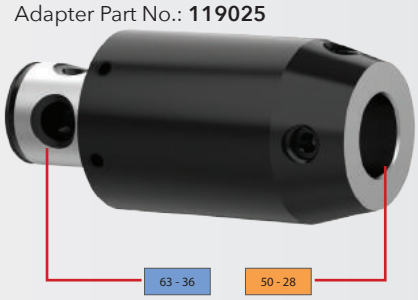

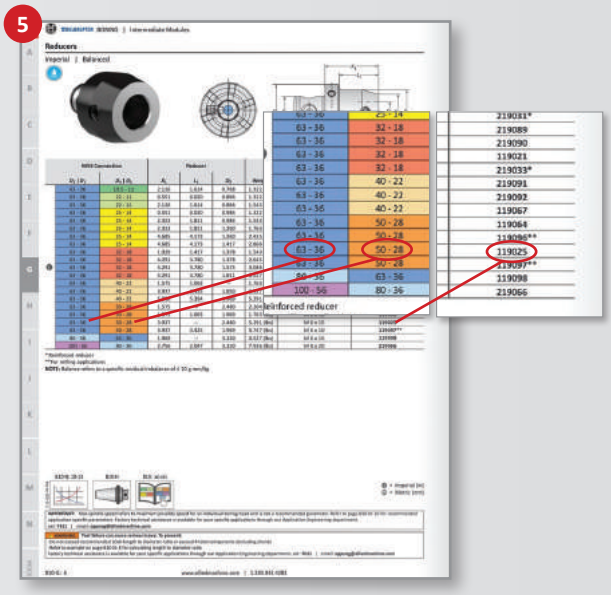

SECTION

B10-A

Versatile Fine Boring

Wohlhaupter® Versatile Fine Boring

VarioBore | 248 | PrimeBore | Digital 510 | DigiBore

Diameter Range: 0.40 mm - 208.00 mm



WOHLHAUPTER®

Precision boring at its finest.

From high precision to high production, Wohlhaupter has the right solution for your hole finishing applications. With the most reliable digital readout displays, the Wohlhaupter versatile boring product line offers the most precise and flexible modular system on the market.

Your safety and the safety of others is very important. This catalogue contains important safety messages. Always read and follow all safety precautions.



This triangle is a safety hazard symbol. It alerts you to potential safety hazards that can cause tool failure and serious injury.

When you see this symbol in the catalogue, look for a related safety message that may be near this triangle or referred to in the nearby text.

There are safety signal words also used in the catalogue. Safety messages follow these words.

⚠ WARNING

WARNING (shown above) means that failure to follow the precautions in this message could result in tool failure and serious injury.

NOTICE means that failure to follow the precautions in this message could result in damage to the tool or machine but not result in personal injury.

NOTE and **IMPORTANT** are also used. These are important that you read and follow but are not safety-related.

Visit www.alliedmachine.com for the most up-to-date information and procedures.

Applicable Industries

Aerospace | Agriculture | Automotive | Firearms | General Machining | Oil & Gas | Renewable Energy

Reference Icons
The following icons will appear throughout the catalogue to help you navigate between products.

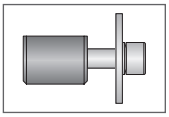

Clamping Elements
For use with insert holders and boring heads

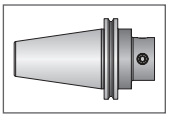

Shanks
A variety of shanks for different machines

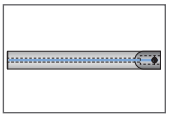

248 Shanks
A variety of shanks for different machines

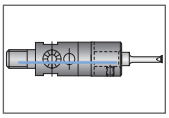

248 Boring Head
248 boring head that connects into the adapter shanks

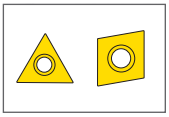

Inserts
For use with insert holder boring heads and boring bars using indexable inserts

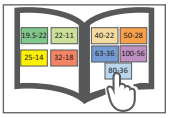

MVS Connection Colour Guide
Detailed instructions and information regarding the MVS connection(s)

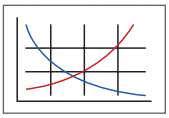

Recommended Cutting Data
Speed and feed recommendations for optimum and safe boring

Through Coolant Option
Indicates that the product is through coolant

Series	Diameter Range Metric (mm)
VarioBore 536	0.40 - 152.00
248 Boring Head	3.00 - 30.20
PrimeBore 450	3.00 - 208.00
Digital 510	0.40 - 12.00
DigiBore 501	3.00 - 208.00

Versatile Fine Boring Contents

VarioBore

Product Overview . . . . . 2 - 3
Boring Heads . . . . . 4 - 5
Boring Bars . . . . . 6 - 10
Serrated Tool Bodies | Insert Holders . . . . . 11 - 12
Serrated Slides | Insert Holders 13
Insert Holders for Boring Heads 14
Outside Turning Serrated Slides | Insert Holders . . . . . 15 - 16
Reducing Sleeves 17
Accessories . . . . . 18 - 19
VarioBore Kits 20- 27

248

Product Overview . . . . . 28 - 29
Boring Heads 30
Boring Bars . . . . . 31 - 32
Adapters 33
Shanks 34
Accessories 35

PrimeBore

Product Overview . . . . . 36 - 37
Boring Heads 38
Boring Bars . . . . . 39 - 40
Serrated Tool Bodies | Insert Holders 42
Serrated Slides | Insert Holders . . . . . 43 - 44
Outside Turning Insert Holders for Boring Heads . . . . . 45 - 46
Accessories 47
PrimeBore Kits . . . . . 48 - 49

Digital 510

Product Overview . . . . . 50 - 51
Boring Heads | Reducing Sleeves 52
Boring Bars . . . . . 53 - 56
Serrated Tool Bodies | Insert Holders 57
Accessories 58

DigiBore

Product Overview . . . . . 60 - 61
Boring Heads 62
Boring Bars . . . . . 63 - 65
Serrated Tool Bodies | Insert Holders . . . . . 66 - 67
Serrated Slides | Insert Holders 68
Outside Turning Tools . . . . . 69 - 70
Accessories . . . . . 71 - 72
DigiBore Kits . . . . . 73 - 80

VarioBore Product Overview



VarioBore with 3E^{TECH+}
VERSATILE FINE BORING

Need more versatility?

The Wohlhaupter® VarioBore head offers precision and versatility, and the 3E^{TECH+} docking port provides convenient and simple diameter adjustments.

Experience ***precision boring*** for yourself.

- Diameter range: 0.40 mm - 152.00 mm
- Offers outside turning capabilities: 2.00 mm - 66.00 mm
- Ease the stress of working on different day-to-day projects with boring kits
- 3E^{TECH+} module provides a simple digital readout
- Max spindle speed: 27,500 RPM



NOTE: 3E^{TECH+} adjustment accuracy of 0.001 mm on diameter

NOTE: Vernier adjustment accuracy of 0.002 mm on diameter

IMPORTANT: Max spindle speed refers to maximum possible speed for an individual boring head and is not a recommended parameter. Refer to page B10-M: 12 for recommended application-specific parameters. Factory technical assistance is available for your specific applications through our Application Engineering department.
email: **engineering.eu@alliedmachine.com**

VARIO BORE with 3E TECH+ Universal Digital Readout Module



3E[TECH+] Universal Digital Module



VarioBore Head

NOTE: 3E[TECH+] adjustment accuracy of 0.001 mm on diameter

NOTE: Vernier adjustment accuracy of 0.002 mm on diameter



Coolant Delivery System



Insert Holder
Ø 52.00 mm - 102.00 mm



Outside Turning
Ø 4.00 mm - 66.00 mm



Serrated Tool Body

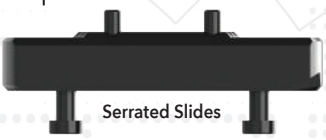

Serrated Slides



Insert Holder
Ø 29.00 mm - 53.00 mm



Serrated Tool Body



Insert Holder
Ø 20.00 mm - 32.00 mm



Carbide Boring Bar
Ø 10.00 mm - 20.00 mm



Heavy Metal Boring Bar
Ø 6.00 mm - 10.00 mm



Steel Boring Bar
Ø 6.00 mm - 27.00 mm



Adapter



Reducing Sleeve



Mini-Boring Bar
Ø 3.00 mm - 10.00 mm



Coated Carbide Mini-Boring Bar
Ø 0.40 mm - 3.00 mm



NOTE: 3E[TECH+] adjustment accuracy of 0.001 mm on diameter

NOTE: Vernier adjustment accuracy of 0.002 mm on diameter





OPERATION **VERSATILITY**

from **0.40 mm** to **152.00 mm**
plus outside turning

Digital 3E^{TECH+} Boring Head

Diameter Range: 0.40 mm - 152.00 mm

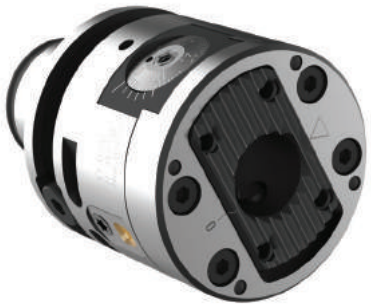

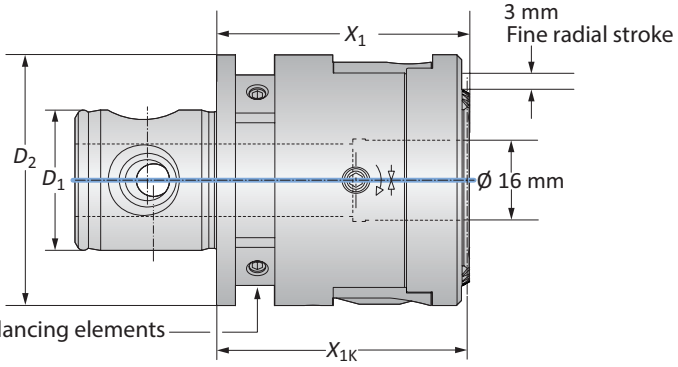

NOTE: Vernier adjustment accuracy of 0.002 mm on diameter

VarioBore Digital 3E^{TECH+} Boring Head

MVS Connection		Boring Head				
	D_2 | D_1	Boring Range	X_1	X_{1K}	Weight	Part No.
m	50 - 28	0.40 - 152.00	50.00	49.50	0.70 (kg)	**536002**

NOTE: Balancing elements, 3E^{TECH+} digital readout module, and charging unit must be ordered separately.
NOTE: VarioBore heads are compatible with Kaiser® connection

3E^{TECH+} Digital Readout Module

Part No.	Charging Unit*
536015	**536016**

NOTE: WEEE-Reg.-Nr. DE 15820388
*Charging unit sold separately



NOTE: 3E^{TECH+} adjustment accuracy of 0.001 mm on diameter

B10-M: 12-13 | B10-F | B10: VI-VII

Key on B10-A: 1

m = Metric (mm)

IMPORTANT: Max spindle speed refers to maximum possible speed for an individual boring head and is not a recommended parameter. Refer to page B10-M: 12 for recommended application-specific parameters. Factory technical assistance is available for your specific applications through our Application Engineering department.
email: **engineering.eu@alliedmachine.com**

Non-Digital Boring Head

Diameter Range: 0.40 mm - 152.00 mm



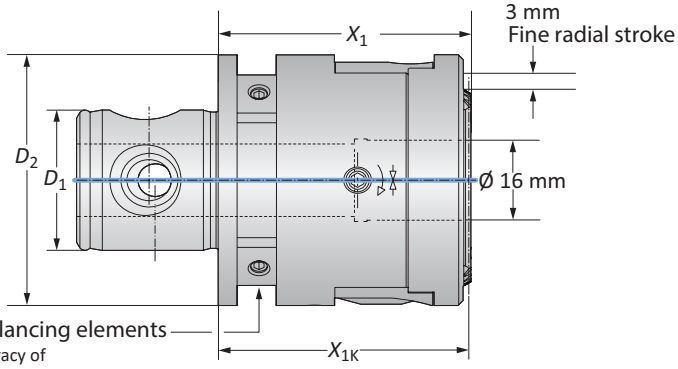

NOTE: Vernier adjustment accuracy of 0.002 mm on diameter

VarioBore Non-Digital Boring Head

MVS Connection		Boring Head				
	D_2 | D_1	Boring Range	X_1	X_{1K}	Weight	Part No.
ⓜ	50 - 28	0.40 - 152.00	50.00	49.50	0.70 (kg)	**536001**

NOTE: Balancing elements must be ordered separately.
NOTE: VarioBore heads are compatible with Kaiser® connection

B10-M: 12-13 | B10-F | B10: VI-VII

Key on B10-A: 1

ⓜ = Metric (mm)

IMPORTANT: Max spindle speed refers to maximum possible speed for an individual boring head and is not a recommended parameter. Refer to page B10-M: 12 for recommended application-specific parameters. Factory technical assistance is available for your specific applications through our Application Engineering department.
email: **engineering.eu@alliedmachine.com**

Mini Boring Bars

WHC126 Coated Carbide | Diameter Range: 0.40 mm - 3.00 mm



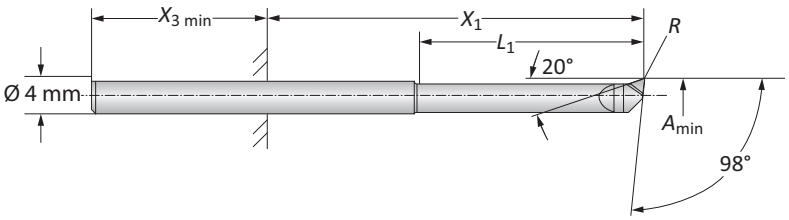

Mini Boring Bars

Boring Range	Boring Bar*				
A_{min}	X_1	$X_{3\ min}$	L_1	R	Part No.
0.40	3.00 - 17.00	25.00	2.00	0.03	**081401WHC126**
0.60	4.00 - 18.00	25.00	3.00	0.04	**081402WHC126**
0.80	5.00 - 19.00	25.00	4.00	0.04	**081403WHC126**
1.00	6.00 - 20.00	25.00	5.00	0.05	**081404WHC126**
1.50	8.50 - 22.50	25.00	7.50	0.05	**081405WHC126**
2.00	11.00 - 25.00	25.00	10.00	0.05	**081406WHC126**
2.50	13.50 - 27.50	25.00	12.50	0.05	**081407WHC126**
2.80	15.00 - 28.00	25.00	14.00	0.07	**081408WHC126**

*Fixture-through reducing sleeve (B10-A: 17)

B10-M: 12-13

Key on B10-A: 1

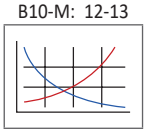

B10: VI-VII

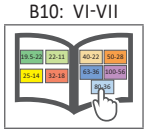

= Metric (mm)

Mini Boring Bars

WHC05 | WHW04 | WBN150 | Diameter Range: 3.00 mm - 10.00 mm



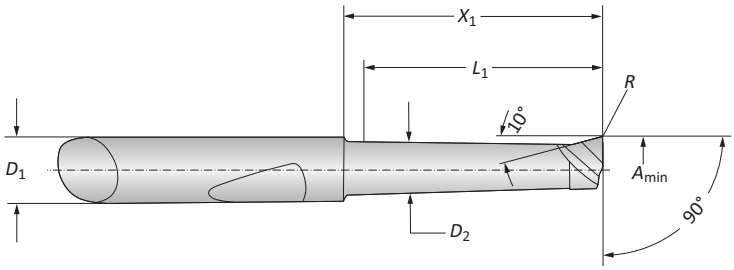

Mini Boring Bars

	Boring Range	Boring Bar					Part No.		
	A_{min}	D_1	D_2	X_1	L_1	R	Coated Carbide	Uncoated Carbide	CBN
	3.00	6.00	2.60	11.50	10.00	0.10	**081306WHC05**	–	**081322WBN150**
	3.00	6.00	2.60	16.50	15.00	0.10	**081307WHC05**	**081307WHW04**	–
	4.00	6.00	3.60	12.00	10.00	0.20	**081308WHC05**	–	**081317WBN150**
	4.00	6.00	3.60	17.00	15.00	0.20	**081309WHC05**	–	**081341WBN150**
	4.00	6.00	3.60	22.00	20.00	0.20	**081310WHC05**	**081310WHW04**	–
	5.00	6.00	4.60	12.00	10.00	0.20	**081311WHC05**	–	**081318WBN150**
ⓜ	5.00	6.00	4.60	22.00	20.00	0.20	**081312WHC05**	–	**081319WBN150**
	5.00	6.00	4.60	32.00	30.00	0.20	**081313WHC05**	**081313WHW04**	–
	6.00	6.00	5.60	22.00	20.00	0.20	**081314WHC05**	–	**081320WBN150**
	6.00	6.00	5.60	32.00	30.00	0.20	**081315WHC05**	–	**081321WBN150**
	6.00	6.00	5.60	42.00	40.00	0.20	**081316WHC05**	**081316WHW04**	–
	8.00	8.00	7.60	25.00	23.00	0.20	**081323WHC05**	–	–
	8.00	8.00	7.60	50.00	48.00	0.20	**081324WHC05**	–	–

Adapters

	Boring Range	Adapter				
	A_{min}	D_3	D_5	X_1	L_1	Part No.
ⓜ	3.00	6.00	20.00	22.50	14.00	**319010**
	8.00	8.00	22.00	22.50	14.00	**236071**

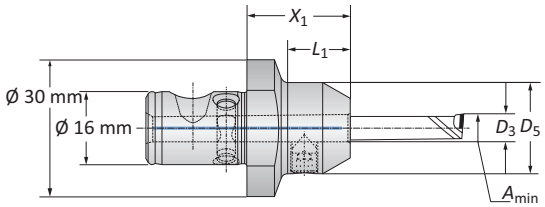

B10-M: 12-13
Key on B10-A: 1
B10: VI-VII

ⓜ = Metric (mm)

Boring Bars

Steel | Diameter Range: 6.00 mm - 27.00 mm



Form 101

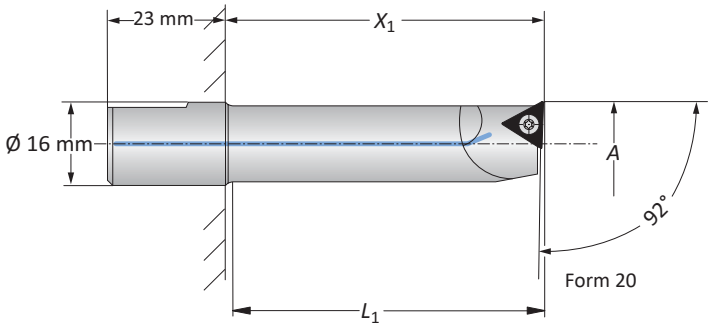

Form 20

	Boring Range	Boring Bar						
	A	X_1	L_1	Weight	Insert Form	Part No.	Insert Form	Part No.
	6.00 - 8.00	22.00	19.00	0.03 (kg)	–	–	211*	**081053**
	8.00 - 10.00	30.00	27.00	0.04 (kg)	–	–	211*	**218071**
	10.00 - 12.00	45.00	42.00	0.05 (kg)	–	–	20*	**081044**
	10.00 - 12.00	25.00	22.00	0.04 (kg)	101	**218047**	20*	**218058**
	10.00 - 12.00	35.00	32.00	0.05 (kg)	101	**218048**	20*	**218059**
	12.00 - 14.00	30.00	27.00	0.05 (kg)	101	**218012**	20*	**218014**
	12.00 - 14.00	45.00	42.00	0.06 (kg)	101	**218049**	20*	**218060**
	14.00 - 16.00	35.00	32.00	0.06 (kg)	101	**218050**	20*	**218061**
ⓜ	14.00 - 16.00	50.00	47.00	0.08 (kg)	101	**218051**	20*	**218062**
	15.00 - 17.00	37.00	34.00	0.06 (kg)	–	–	20*	**081048**
	15.00 - 17.00	60.00	57.00	0.08 (kg)	101	**081041**	20*	**081045**
	16.00 - 20.00	40.00	37.00	0.08 (kg)	101	**218052**	20*	**218063**
	16.00 - 20.00	60.00	57.00	0.09 (kg)	101	**218053**	20*	**218064**
	20.00 - 25.00	37.00	34.00	0.07 (kg)	–	–	20*	**081049**
	20.00 - 25.00	70.00	67.00	0.11 (kg)	101	**081042**	20*	**081046**
	25.00 - 27.00	37.00	34.00	0.07 (kg)	–	–	20*	**081050**
	25.00 - 27.00	70.00	67.00	0.11 (kg)	101	**081043**	20*	**081047**

*Not suitable for indexable inserts with a radius of 0.80 mm

B10-M: 12-13 | B10-H | B10: VI-VII
Key on B10-A: 1

ⓜ = Metric (mm)
Inserts sold separately

Boring Bars

Heavy Metal | Carbide Diameter Range: 6.00 mm - 20.00 mm

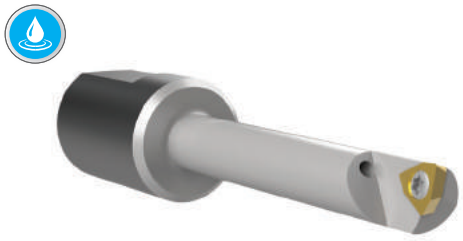

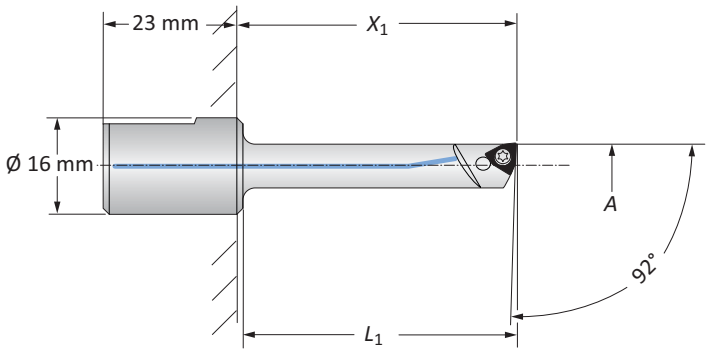

Heavy Metal Boring Bars | Diameter Range: 6.00 mm - 10.00 mm

	Boring Range	Boring Bar				
	A	X_1	L_1	Weight	Insert Form	Part No.
m	6.00 - 8.00	32.00	29.00	0.08 (kg)	211*	**081055**
	8.00 - 10.00	45.00	42.00	0.09 (kg)	211*	**218072**

*Not suitable for indexable inserts with a radius of 0.80 mm



Form 101

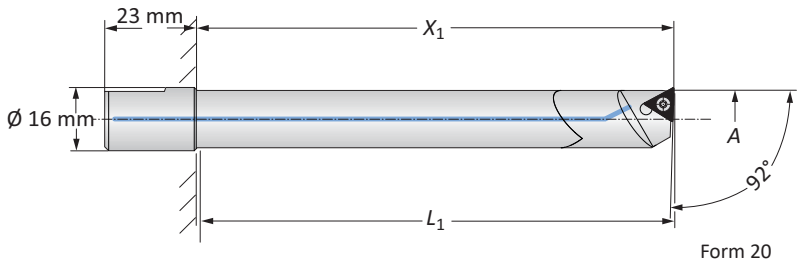

Form 20

Carbide Boring Bars | Diameter Range: 10.00 mm - 20.00 mm

	Boring Range	Boring Bar						
	A	X_1	L_1	Weight	Insert Form	Part No.	Insert Form	Part No.
m	10.00 - 12.00	55.00	52.00	0.07 (kg)	101	**218042**	20*	**218037**
	10.00 - 12.00	75.00	72.00	0.09 (kg)	101	**218032**	20*	**218029**
	12.00 - 14.00	70.00	67.00	0.10 (kg)	101	**218043**	20*	**218038**
	12.00 - 14.00	90.00	87.00	0.15 (kg)	101	**218033**	20*	**218030**
	14.00 - 16.00	75.00	72.00	0.16 (kg)	101	**218044**	20*	**218039**
	14.00 - 16.00	100.00	97.00	0.20 (kg)	101	**218045**	20*	**218040**
	16.00 - 20.00	90.00	87.00	0.26 (kg)	101	**218046**	20*	**218041**
	16.00 - 20.00	120.00	117.00	0.33 (kg)	101	**218034**	20*	**218031**

*Not suitable for indexable inserts with a radius of 0.80 mm

B10-M: 12-13
Key on B10-A: 1
B10-H
B10: VI-VII

m = Metric (mm)
Inserts sold separately

Boring Bars

Steel | Carbide | Diameter Range: 6.00 mm - 20.00 mm



Form 101

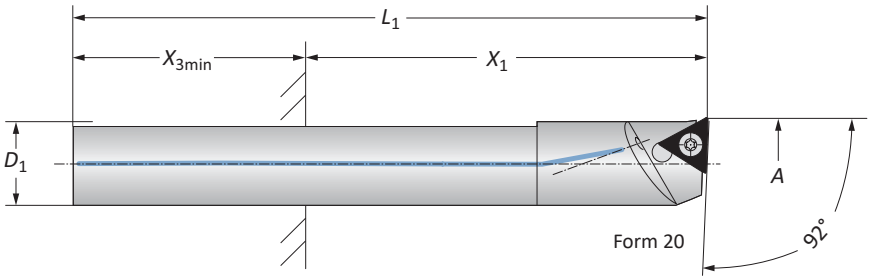

Form 20

Steel Boring Bars | Diameter Range: 6.00 mm - 20.00 mm

	Boring Range	Boring Bar					Part No.			
	A	D_1	X_1	$X_{3\ min}$	L_1	Weight	Insert Form	Boring Bar	Insert Form	Boring Bar
	6.00 - 8.00	5.00*	12.50 - 25.00	25.00	70.00	0.01 (kg)	211**	**514032**	–	–
	8.00 - 10.00	7.00*	17.50 - 35.00	25.00	81.00	0.02 (kg)	211**	**514033**	–	–
	10.00 - 12.00	8.00*	20.00 - 40.00	25.00	85.00	0.03 (kg)	101	**514003**	20**	**514004**
m	12.00 - 14.00	10.00*	25.00 - 50.00	25.00	100.00	0.05 (kg)	101	**514005**	20**	**514006**
	14.00 - 16.00	12.00*	30.00 - 60.00	30.00	114.00	0.09 (kg)	101	**514007**	20**	**514008**
	16.00 -18.00	14.00*	56.00 - 70.00	30.00	121.00	0.13 (kg)	101	**514009**	20**	**514010**
	18.00 - 20.00	14.00*	56.00 - 70.00	30.00	121.00	0.13 (kg)	101	**514011**	20**	**514012**

*Fixture-through reducing sleeve required (B10-A: 17)
**Not suitable for indexable inserts with a radius of 0.8 mm



Form 101

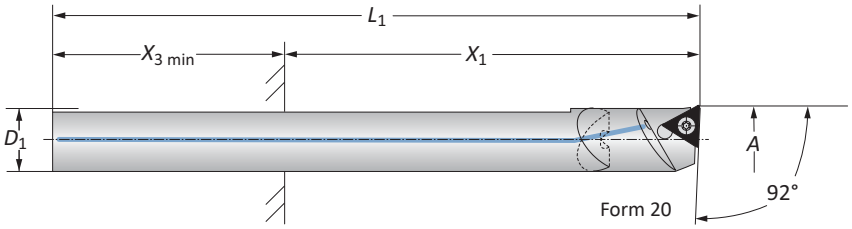

Form 20

Carbide Boring Bars | Diameter Range: 6.00 mm - 20.00 mm

	Boring Range	Boring Bar					Part No.			
	A	D_1	X_1	$X_{3\ min}$	L_1	Weight	Insert Form	Boring Bar	Insert Form	Boring Bar
	6.00 - 8.00	5.00*	12.50 - 40.00	25.00	90.00	0.02 (kg)	211**	**514034**	–	–
	8.00 - 10.00	7.00*	21.00 - 56.00	25.00	109.00	0.05 (kg)	211**	**514035**	–	–
	10.00 - 12.00	8.00*	22.00 - 64.00	25.00	117.00	0.07 (kg)	101	**514015**	20**	**514016**
	12.00 - 14.00	10.00*	51.00 - 80.00	25.00	140.00	0.13 (kg)	101	**514017**	20**	**514018**
m	14.00 - 16.00	12.00*	68.00 - 96.00	30.00	162.00	0.22 (kg)	101	**514019**	20**	**514020**
	16.00 - 18.00	14.00*	77.00 - 112.00	30.00	142.00	0.26 (kg)	101	**514021**	20**	**514022**
	16.00 - 18.00	14.00*	112.00 - 147.00	30.00	177.00	0.33 (kg)	101	**514023**	20**	**514024**
	18.00 - 20.00	14.00*	77.00 - 112.00	30.00	142.00	0.26 (kg)	101	**514025**	20**	**514026**
	18.00 - 20.00	14.00*	112.00 - 147.00	30.00	177.00	0.33 (kg)	101	**514027**	20**	**514028**

*Fixture-through reducing sleeve required (B10-A: 17)
**Not suitable for indexable inserts with a radius of 0.80 mm

B10-M: 12-13
Key on B10-A: 1
B10-H
B10: VI-VII

m = Metric (mm)
Inserts sold separately

Serrated Tool Bodies | Insert Holders

Diameter Range: 20.00 mm - 32.00 mm



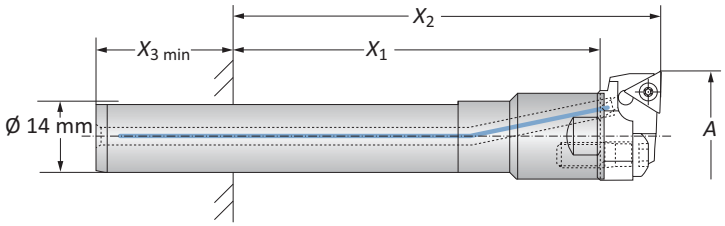

Serrated Tool Bodies

	Substrate	Boring Range A	Serrated Tool Body* X_1	X_2	$X_{3\ min}$	Weight	Part No.
ⓜ	Steel	20.00 - 32.00	37.00 - 72.00	49.00 - 84.00	30.00	0.13 (kg)	**514029**
ⓜ	Carbide	20.00 - 32.00	65.00 - 100.00	77.00 - 112.00	30.00	0.25 (kg)	**514030**
ⓜ	Carbide	20.00 - 32.00	100.00 - 135.00	112.00 - 147.00	30.00	0.33 (kg)	**514031**

*Fixture-through reducing sleeeve (B10-A: 17)

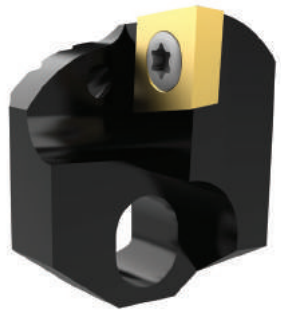

Form 101

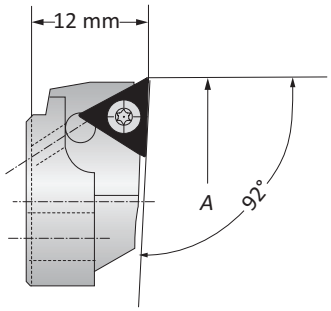

Form 20

Insert Holders

	Boring Range A	Weight	Insert Form	Part No.	Insert Form	Part No.
ⓜ	20.00 - 22.00	0.01 (kg)	101	**502052**	20*	**502046**
ⓜ	22.00 - 24.00	0.01 (kg)	101	**502053**	20*	**502047**
ⓜ	24.00 - 26.00	0.01 (kg)	101	**502054**	20*	**502048**
ⓜ	26.00 - 28.00	0.01 (kg)	101	**502055**	20*	**502049**
ⓜ	28.00 - 30.00	0.01 (kg)	101	**502056**	20*	**502050**
ⓜ	30.00 - 32.00	0.01 (kg)	101	**502057**	20*	**502051**

*Not suitable for indexable inserts with a radius of 0.80 mm

B10-M: 12-13 | B10-A: 18 | B10-H | B10: VI-VII
Key on B10-A: 1

ⓜ = Metric (mm)
Inserts sold separately

Serrated Tool Bodies | Insert Holders

Diameter Range: 29.00 mm - 53.00 mm



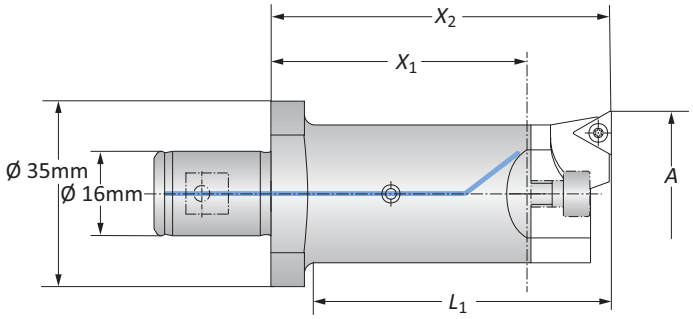

Serrated Tool Bodies

	Boring Range *A*	Serrated Tool Body X_1	X_2	L_1	Weight	Part No.
m	29.00 - 53.00	48.00	64.00	56.00	0.20 (kg)	**236021**
	29.00 - 53.00	84.00	100.00	92.00	0.30 (kg)	**236031**

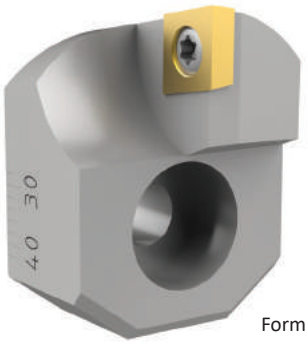

Form 101

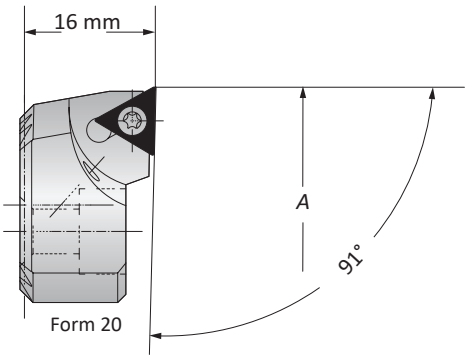

Form 20

Insert Holders

	Boring Range *A*	Weight	Insert Form	Part No.
m	29.00 - 41.00	0.04 (kg)	101	**236023**
	29.00 - 41.00	0.04 (kg)	20*	**236022**
	40.00 - 53.00	0.06 (kg)	101	**236025**
	40.00 - 53.00	0.06 (kg)	20*	**236024**

*Not suitable for indexable inserts with a radius of 0.80 mm

B10-M: 12-13 | B10-A: 18 | B10-H | B10: VI-VII
Key on B10-A:1

m = Metric (mm)
Inserts sold separately

www.alliedmachine.com | +44 (0) 1384 400 900 | enquiries.eu@alliedmachine.com

Alu-Line Serrated Slides | Insert Holders

Diameter Range: 68.00 mm - 152.00 mm



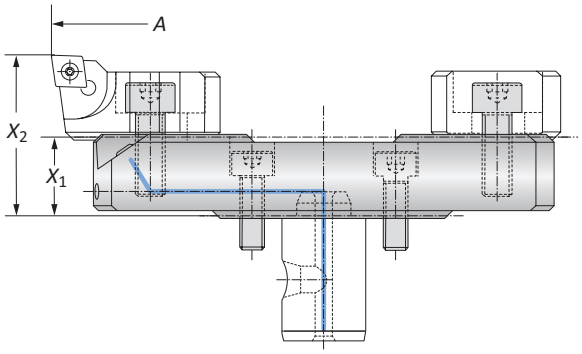

Alu-Line Serrated Slides

	Boring Range A	Serrated Slide X_1	Serrated Slide X_2	Weight	Part No.
m	68.00 - 96.00	16.00	32.50	0.10 (kg)	**501054**
m	96.00 - 124.00	16.00	32.50	0.10 (kg)	**501055**
m	124.00 - 152.00	16.00	32.50	0.20 (kg)	**501056**

Insert Holders

	Boring Range A	Weight	Insert Form	Part No.
m	68.00 - 152.00	0.05 (kg)	101	**502064**
m	68.00 - 152.00	0.05 (kg)	20	**502069**

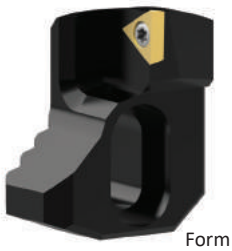

Form 20

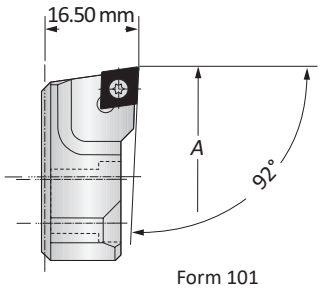

Form 101

Counterweight

	Counterweight X_1	Weight	Part No.
m	13.40	0.05 (kg)	**502165**

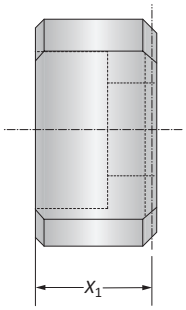

Alu-Line Coolant Delivery Section

	Coolant Delivery X_1	Weight	Part No.
m	25.50	0.01 (kg)	**450137**

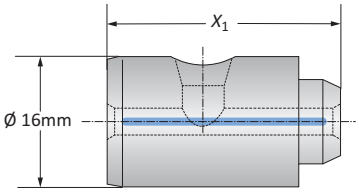

B10-M: 12-13
Key on B10-A: 1
B10-A: 18
B10-H
B10: VI-VII

m = Metric (mm)
Inserts sold separately

Insert Holders for Boring Heads

Diameter Range: 52.00 mm - 102.00 mm



Form 101

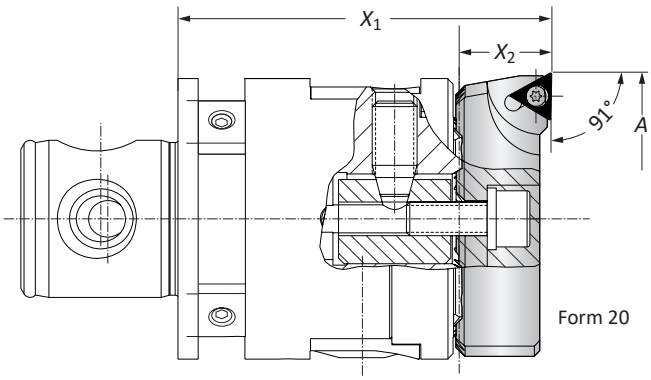

Form 20

Insert Holders for Boring Heads

	Boring Range	Insert Holder				
	A	X_1	X_2	Weight	Insert Form	Part No.
	52.00 - 77.00	66.00	16.50	0.06 (kg)	101	**236027**
m	52.00 - 77.00	66.00	16.50	0.06 (kg)	20	**236026**
	76.00 - 102.00	66.00	16.50	0.10 (kg)	101	**236029**
	76.00 - 102.00	66.00	16.50	0.10 (kg)	20	**236028**

Clamping Piece for Insert Holder for Boring Heads

	Boring Range	Service Key	Complete Part No.
m	52.00 - 102.00	s5	**236020**

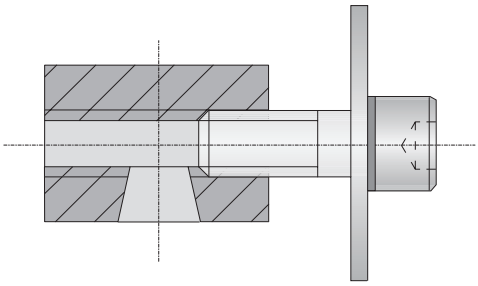

B10-M: 12-13 | B10-A: 18 | B10-H | B10: VI-VII

Key on B10-A:1

m = Metric (mm)

Inserts sold separately

www.alliedmachine.com | +44 (0) 1384 400 900 | enquiries.eu@alliedmachine.com

Outside Turning Insert Holders for Boring Heads

Outside Turning | Diameter Range: 4.00 mm - 66.00 mm



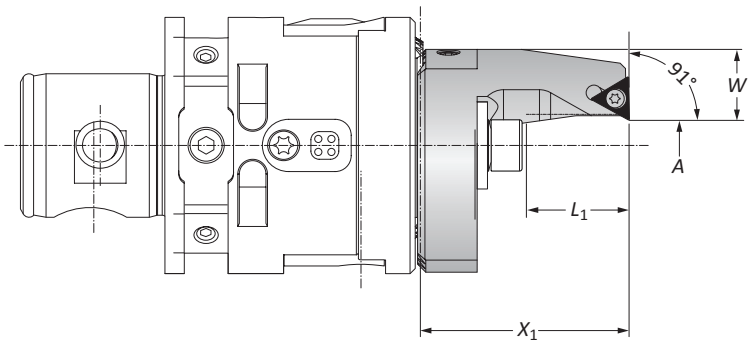

Type A Insert Holders

	Boring Range	Insert Holder						
	A	X_1	L_1	*W*	Weight	Type	Insert Form	Part No.
m	4.00 - 17.50	40.50	20.00	16.60	0.10	A	20*	**236081**
	16.50 - 30.00	50.50	30.00	11.10	0.10	A	20*	**236082**

NOTE: Clockwise and neutral execution
*Not suitable for indexable inserts with a radius of 0.80 mm



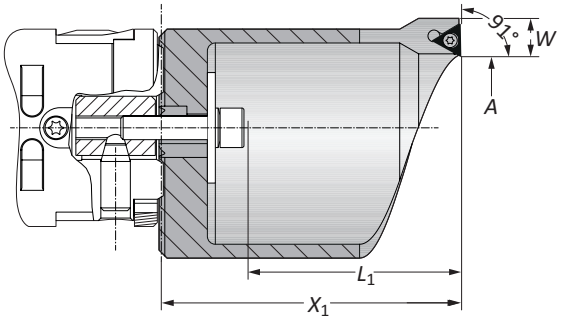

Type B Insert Holders

	Boring Range	Insert Holder						
	A	X_1	L_1	*W*	Weight	Type	Insert Form	Part No.
m	29.00 - 44.00	75.50	54.00	9.60	0.30 (kg)	B	20*	**236083**
	43.00 - 66.00	100.50	79.00	9.60	0.40 (kg)	B	20*	**236084**

NOTE: Clockwise and neutral execution
*Not suitable for indexable inserts with a radius of 0.80 mm

Clamping Pieces for Outside Turning Insert Holders

	Insert Holder Type	Boring Range	Service Key	Complete Part No.
m	A	4.00 - 30.00	**s5**	**236088**
	B	29.00 - 66.00	**s5**	**236089**

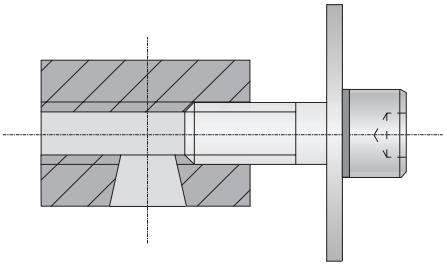

B10-M: 12-13 | B10-A: 18 | B10-H | B10: VI-VII

Key on B10-A: 1

m = Metric (mm)
Inserts sold separately

Outside Turning Serrated Slides | Insert Holders

Diameter Range: 2.00 mm - 58.00 mm



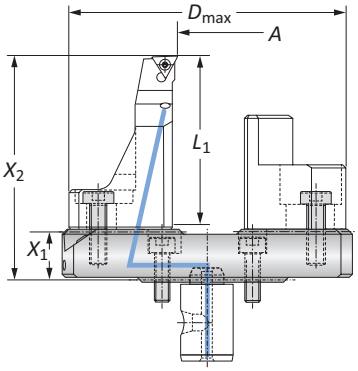

Serrated Slides

Outside Turning Range		Serrated Slide				Interfering Diameter	
	A	X_1	X_2	L_1	Weight	D_{max}	Part No.
m	2.00 - 30.00	16.00	73.00	55.00	0.35 (kg)	101.00	**501064**
	30.00 - 58.00	16.00	73.00	55.00	0.44 (kg)	129.00	**501065**

Insert Holder

Boring Range		Insert Holder		Insert	
	A	X_1	Weight	Form	Part No.
m	2.00 - 58.00	57.00	0.15 (kg)	20*	**502082**

*Clockwise and neutral execution



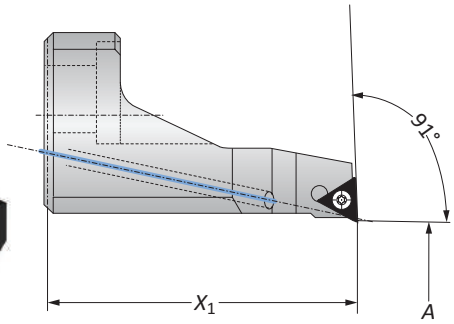

Counterweight

Counterweight			
	X_1	Weight	Part No.
m	37.75	0.16 (kg)	**502183**

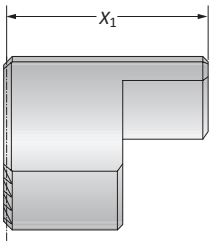

Alu-Line Coolant Delivery Section

Coolant Delivery Section			
	X_1	Weight	Part No.
m	25.50	0.01 (kg)	**450137**

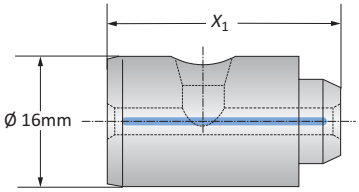

B10-M: 12-13 | B10-A: 18 | B10-H | B10: VI-VII
Key on B10-A:1

m = Metric (mm)
Inserts sold separately

Accessories

Metric Reducing Sleeves

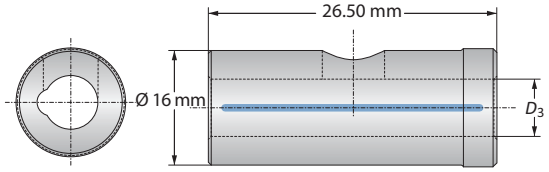

Reducing Sleeves

	Reducing Sleeve D_3	Weight	Part No.
	4.00	0.05 (kg)	**450129**
	5.00	0.04 (kg)	**450130**
	7.00	0.04 (kg)	**450132**
ⓜ	8.00	0.04 (kg)	**450133**
	10.00	0.03 (kg)	**450134**
	12.00	0.02 (kg)	**450135**
	14.00	0.01 (kg)	**450136**

ⓜ = Metric (mm)

Accessories

Clamping Elements | Thread Pin | Balancing Element | 3E^{TECH} Accessories

Clamping Elements for Insert Holders

	Boring Range	1 Cap Screw	Hex Size	2 Washer	3 Clamping Nut	4 Locking Washer	Complete Part No.
	4 - 30	**070153**	**s5**	**315155**	**236120**	**215254**	**236088**
m	29 - 66	**070153**	**s5**	**315156**	**236120**	**215254**	**236089**
	52 - 102	**115147**	**s5**	**115725**	**236120**	-	**236020**

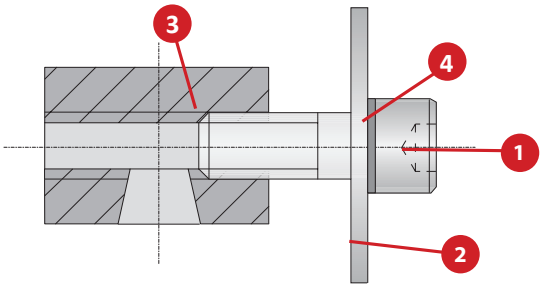

Clamping Elements for Serrated Tool Body

1 Cap Screw	Hex Size	2 Clamping Piece
027154	**s4**	**145184**

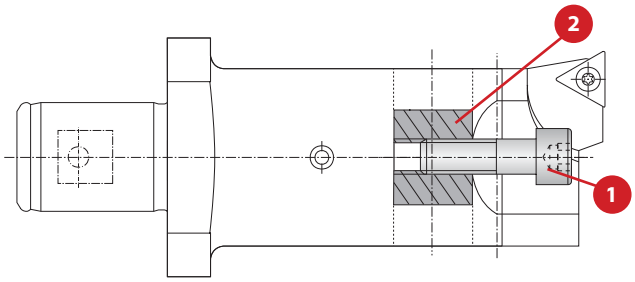

Thread Pin

Service Key	1 Part No.
S3 / A	**415244**

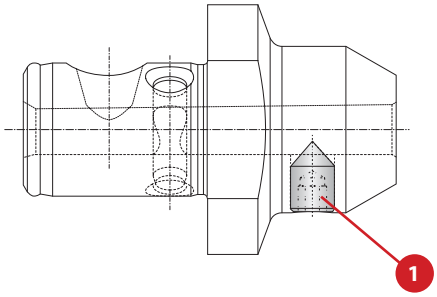

Balancing Element

Nominal Size	Key Size / Type	1 Part No.
M8 x 1.25 x 8	s2 / A	**536005**

NOTE: Balancing elements sold separately

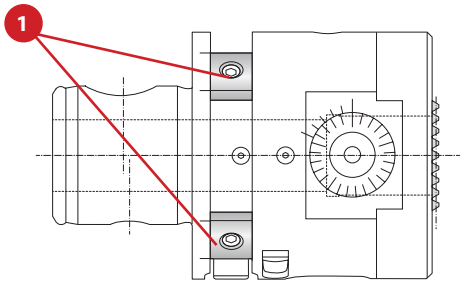

3E^{TECH+} Accessories

1 Charging Unit Part No.
536016

NOTE: Charging unit sold separately from 3E^{TECH+}



NOTE: 3E^{TECH+} adjustment accuracy of 0.001 mm on diameter

3E^{TECH} Accessories

1 Sealing Ring Part No.	2 Battery CR2032 Part No.
215483	**515491**

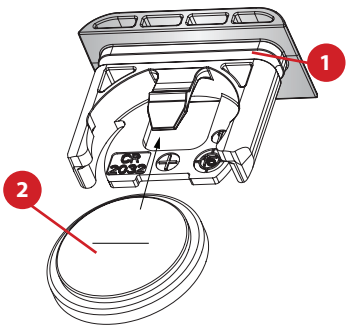

Accessories

No.	Part	Insert Form	Size	Part No.
1	Clamping screw	–	–	**070333**
2	Thread pin for tool clamping	–	–	**215674**
3	Clamping screw for balance weight	–	–	**115470**
4	Balancing screw plug	–	–	**115119**
5	Insert screws	Form 20 Form 101 Form 211	T7 T8 T6	**115535** **115676** **215377**
6	Hex wrench	–	s2.5 s2	**115575** **215473**
7	Hex wrench	–	s4	**115576**
8	Torx driver	–	T6 T7 T8	**115537** **115591** **115590**
9	Torx screwdriver	Form 211 Form 20 Form 101	T6 T7 T8	**415507** **415508** **415514**

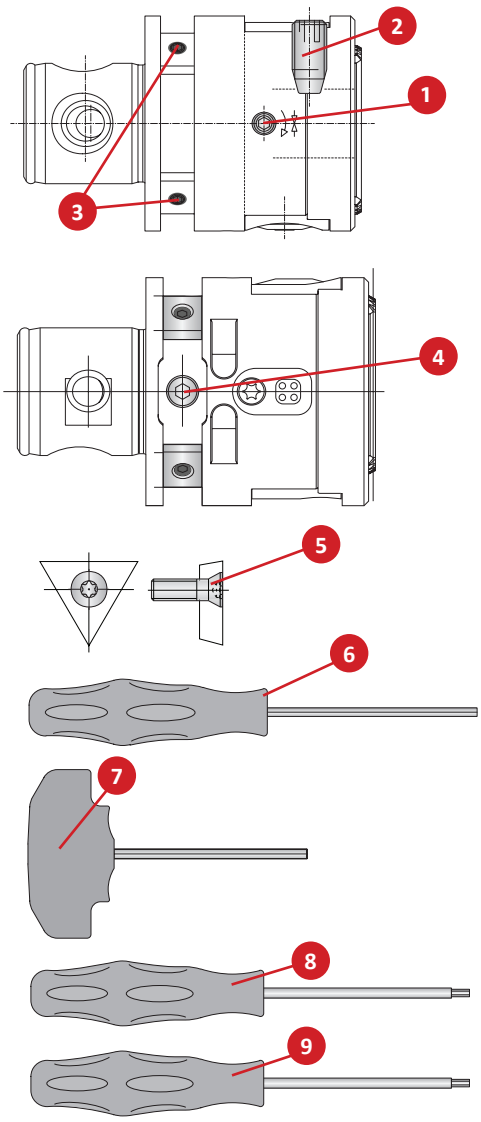

No.	Part	Size	Part No.
1	Screw for securing insert holder	T25	**415112**
2	Clamping piece	–	**145184**
3	Cap screw for securing insert holders	s4	**027154**
4	Cap screw for securing insert holder/ counterweight	s4	**315248**
5	Set screw - coolant	s1.5	**114224**
6	Cap screw for securing serrated slide	s3	**116289**
8	Sealing ring for coolant delivery	–	**415386**

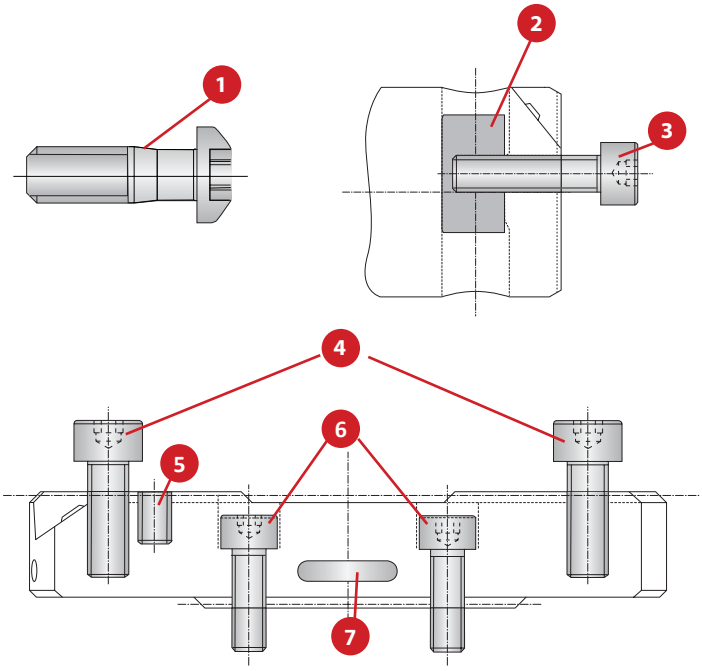

Kit Components

3E[TECH+] | Insert Form 101 | Diameter Range: 10.00 mm - 30.00 mm

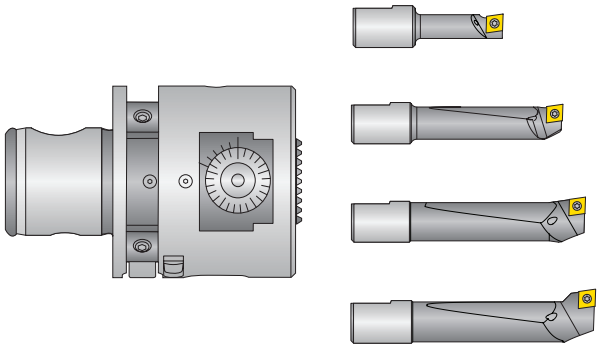

Diameter Range: 10.00 mm - 30.00 mm

Kit Components					
	Boring Head	Boring Bar Range	Boring Bars	Service Keys	Kit No.
Ⓜ	536002	10.00 - 15.00	218048	115575 (s2.5)	**103046**
		15.00 - 20.00	081041	215403 (s4)	
		20.00 - 25.00	081042	115590 (T8)	
		25.00 - 30.00	081043		

NOTE: Balancing elements and inserts sold separately
NOTE: 3E[TECH+] digital readout module and charging station sold separately



3E[TECH+] Digital Readout Module

Part No.	Charging Unit*
536015	**536016**

NOTE: WEEE-Reg.-Nr. DE 15820388
*Charging unit sold separately



NOTE: 3E[TECH+] adjustment accuracy of 0.001 mm on diameter

B10-M: 12-13 | B10-A: 18 | B10-H | B10: VI-VII
Key on B10-A: 1

Ⓜ = Metric (mm)
Inserts sold separately

IMPORTANT: Max spindle speed refers to maximum possible speed for an individual boring head and is not a recommended parameter. Refer to page B10-M: 12 for recommended application-specific parameters. Factory technical assistance is available for your specific applications through our Application Engineering department.
email: **engineering.eu@alliedmachine.com**

Kit Components

3E[TECH+] | Insert Form 20 | Diameter Range: 10.00 mm - 30.00 mm

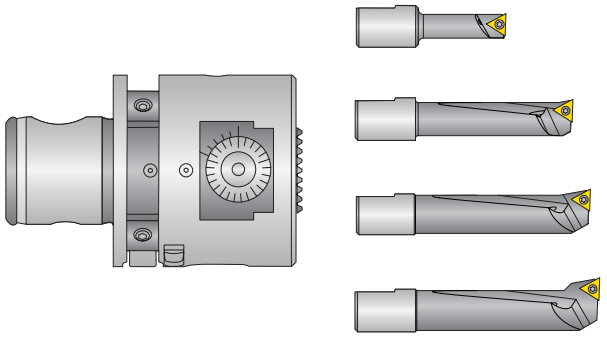

Diameter Range: 10.00 mm - 30.00 mm

Kit Components					
	Boring Head	Boring Bar Range	Boring Bars	Service Keys	Kit No.
Ⓜ	536002	10.00 - 15.00	218059	115575 (s2.5)	**103045**
		15.00 - 20.00	081045	215403 (s4)	
		20.00 - 25.00	081046	115591 (T7)	
		25.00 - 30.00	081047		

NOTE: Balancing elements and inserts sold separately
NOTE: 3E[TECH+] digital readout module and charging station sold separately



3E[TECH+] Digital Readout Module

Part No.	Charging Unit*
536015	**536016**

NOTE: WEEE-Reg.-Nr. DE 15820388
*Charging unit sold separately



NOTE: 3E[TECH+] adjustment accuracy of 0.001 mm on diameter

B10-M: 12-13 | B10-A: 18 | B10-H | B10: VI-VII

Key on B10-A: 1

Ⓜ = Metric (mm)
Inserts sold separately

IMPORTANT: Max spindle speed refers to maximum possible speed for an individual boring head and is not a recommended parameter. Refer to page B10-M: 12 for recommended application-specific parameters. Factory technical assistance is available for your specific applications through our Application Engineering department.
email: **engineering.eu@alliedmachine.com**

Kit Components

3E[TECH+] | Insert Form 101 | Diameter Range: 10.00 mm - 102.00 mm

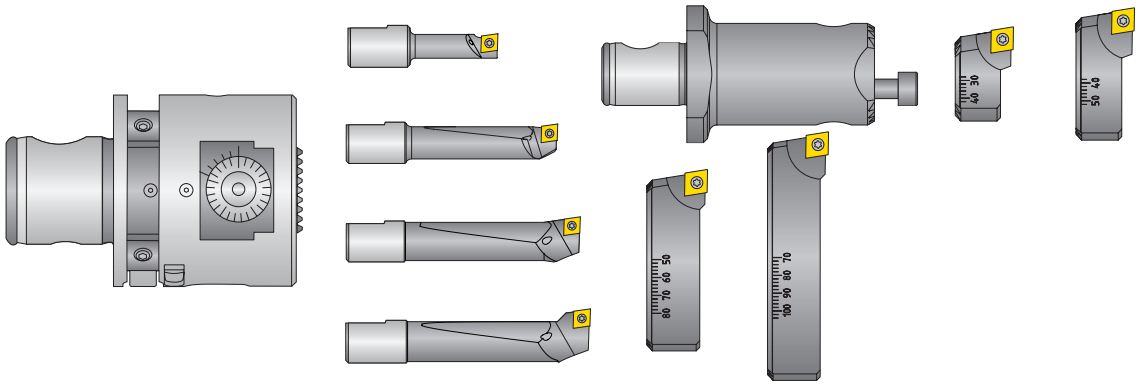

Diameter Range: 10.00 mm - 102.00 mm

Kit Components

	Boring Head	Boring Bars: Boring Bar Range	Boring Bars: Part No.	Serrated Tool Body & Insert Holders: Serrated Tool Body	Serrated Tool Body & Insert Holders: Insert Holder Range	Serrated Tool Body & Insert Holders: Part No.	Insert Holders for Boring Head: Insert Holder Range	Insert Holders for Boring Head: Part No.	Insert Holders for Boring Head: Clamping Piece	Service Keys	Kit No.
	536002	10.00 - 15.00	218048	236021	29.00 - 41.00	236023	52.00 - 77.00	236027	236020	115575 (s2.5)	**103048**
ⓜ		15.00 - 20.00	081041		40.00 - 53.00	236025	76.00 - 102.00	236029		215403 (s4)	
		20.00 - 25.00	081042							215521 (s5)	
		25.00 - 30.00	081043							115590 (T8)	

NOTE: Balancing elements and inserts sold separately
NOTE: 3E[TECH+] digital readout module and charging station sold separately



3E[TECH+] Digital Readout Module

Part No.	Charging Unit*
536015	**536016**

NOTE: WEEE-Reg.-Nr. DE 15820388
*Charging unit sold separately



NOTE: 3E[TECH+] adjustment accuracy of 0.001 mm on diameter

B10-M: 12-13 | B10-A: 18 | B10-H | B10: VI-VII

Key on B10-A: 1

ⓜ = Metric (mm)
Inserts sold separately

IMPORTANT: Max spindle speed refers to maximum possible speed for an individual boring head and is not a recommended parameter. Refer to page B10-M: 12 for recommended application-specific parameters. Factory technical assistance is available for your specific applications through our Application Engineering department.
email: **engineering.eu@alliedmachine.com**

Kit Components

3E[TECH+] | Insert Form 20 | Diameter Range: 10.00 mm - 102.00 mm

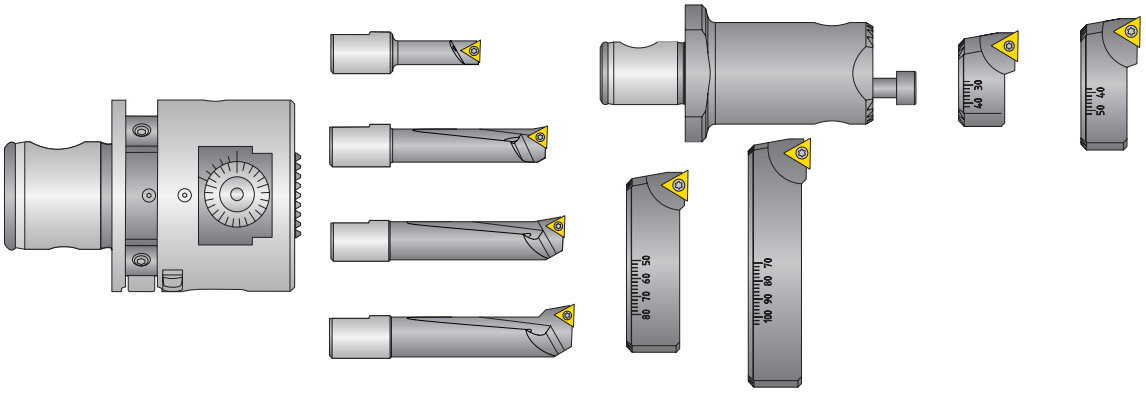

Diameter Range: 10.00 mm - 102.00 mm

Kit Components

	Boring Head	Boring Bars: Boring Bar Range	Boring Bars: Part No.	Serrated Tool Body & Insert Holders: Serrated Tool Body	Serrated Tool Body & Insert Holders: Insert Holder Range	Serrated Tool Body & Insert Holders: Part No.	Insert Holders for Boring Head: Insert Holder Range	Insert Holders for Boring Head: Part No.	Insert Holders for Boring Head: Clamping Piece	Service Keys	Kit No.
ⓜ	536002	10.00 - 15.00	218059	236021	29.00 - 41.00	236026	52.00 - 77.00	236022	236020	115575 (s2.5)	**103047**
		15.00 - 20.00	081045		40.00 - 53.00	236028	76.00 - 102.00	236024		215403 (s4)	
		20.00 - 25.00	081046							215521 (s5)	
		25.00 - 30.00	081047							115591 (T7)	

NOTE: Balancing elements and inserts sold separately
NOTE: 3E[TECH+] digital readout module and charging station sold separately



3E[TECH+] Digital Readout Module

Part No.	Charging Unit*
536015	**536016**

NOTE: WEEE-Reg.-Nr. DE 15820388
*Charging unit sold separately



NOTE: 3E[TECH+] adjustment accuracy of 0.001 mm on diameter

B10-M: 12-13 | B10-A: 18 | B10-H | B10: VI-VII

Key on B10-A: 1

ⓜ = Metric (mm)
Inserts sold separately

IMPORTANT: Max spindle speed refers to maximum possible speed for an individual boring head and is not a recommended parameter. Refer to page B10-M: 12 for recommended application-specific parameters. Factory technical assistance is available for your specific applications through our Application Engineering department.
email: **engineering.eu@alliedmachine.com**

Kit Components

Non-Digital | Insert Form 101 | Diameter Range: 10.00 mm - 30.00 mm

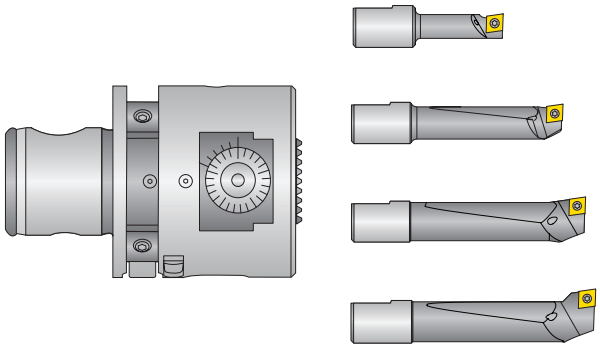

Diameter Range: 10.00 mm - 30.00 mm

	Kit Components				
	Boring Head	Boring Bar Range	Boring Bars	Service Keys	Kit No.
Ⓜ	536001	10.00 - 15.00	218048	115575 (s2.5)	**103050**
		15.00 - 20.00	081041	215403 (s4)	
		20.00 - 25.00	081042	115590 (T8)	
		25.00 - 30.00	081043		

NOTE: Balancing elements and inserts sold separately



B10-M: 12-13 | B10-A: 18 | B10-H | B10: VI-VII

Key on B10-A: 1

Ⓜ = Metric (mm)
Inserts sold separately

IMPORTANT: Max spindle speed refers to maximum possible speed for an individual boring head and is not a recommended parameter. Refer to page B10-M: 12 for recommended application-specific parameters. Factory technical assistance is available for your specific applications through our Application Engineering department.
email: **engineering.eu@alliedmachine.com**

Kit Components

Non-Digital | Insert Form 20 | Diameter Range: 10.00 mm - 30.00 mm

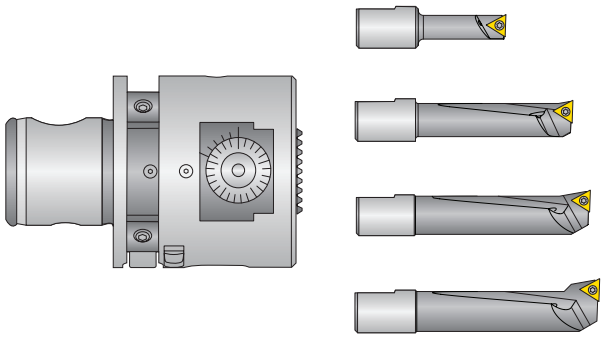

Diameter Range: 10.00 mm - 30.00 mm

Kit Components					
	Boring Head	Boring Bar Range	Boring Bars	Service Keys	Kit No.
ⓜ	536001	10.00 - 15.00	218059	115575 (s2.5)	**103049**
		15.00 - 20.00	081045	215403 (s4)	
		20.00 - 25.00	081046	115591 (T7)	
		25.00 - 30.00	081047		

NOTE: Balancing elements and inserts sold separately



B10-M: 12-13 | B10-A: 18 | B10-H | B10: VI-VII

Key on B10-A: 1

ⓜ = Metric (mm)

Inserts sold separately

IMPORTANT: Max spindle speed refers to maximum possible speed for an individual boring head and is not a recommended parameter. Refer to page B10-M: 12 for recommended application-specific parameters. Factory technical assistance is available for your specific applications through our Application Engineering department.
email: **engineering.eu@alliedmachine.com**

Kit Components

Non-Digital | Insert Form 101 | Diameter Range: 10.00 mm - 102.00 mm

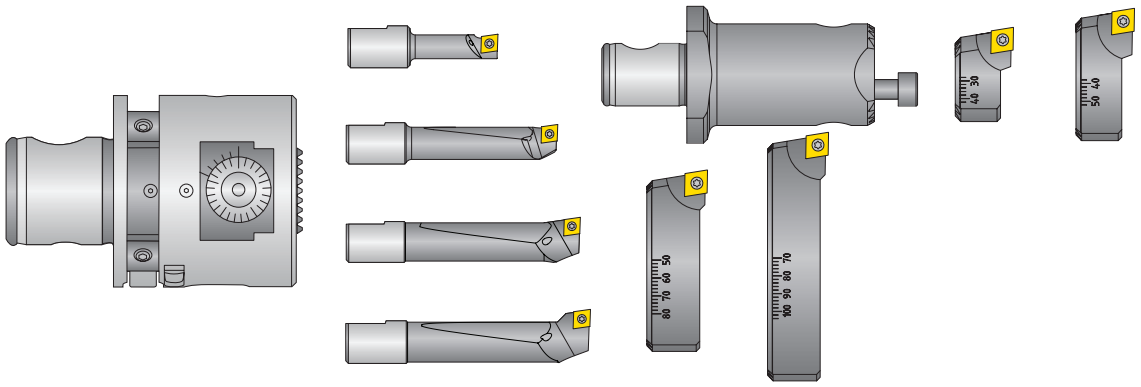

Diameter Range: 10.00 mm - 102.00 mm

	Kit Components										
		Boring Bars		Serrated Tool Body & Insert Holders			Insert Holders for Boring Head				
	Boring Head	Boring Bar Range	Part No.	Serrated Tool Body	Insert Holder Range	Part No.	Insert Holder Range	Part No.	Clamping Piece	Service Keys	Kit No.
	536001	10.00 - 15.00	218048	236021	29.00 - 41.00	236023	52.00 - 77.00	236027	236020	115575 (s2.5)	**103052**
ⓜ		15.00 - 20.00	081041		40.00 - 53.00	236025	76.00 - 102.00	236029		215403 (s4)	
		20.00 - 25.00	081042							215521 (s5)	
		25.00 - 30.00	081043							115590 (T8)	

NOTE: Balancing elements and inserts sold separately



B10-M: 12-13 | B10-A: 18 | B10-H | B10: VI-VII

Key on B10-A: 1

ⓜ = Metric (mm)
Inserts sold separately

IMPORTANT: Max spindle speed refers to maximum possible speed for an individual boring head and is not a recommended parameter. Refer to page B10-M: 12 for recommended application-specific parameters. Factory technical assistance is available for your specific applications through our Application Engineering department.
email: **engineering.eu@alliedmachine.com**

Kit Components

Non-Digital | Insert Form 20 | Diameter Range: 10.00 mm - 102.00 mm

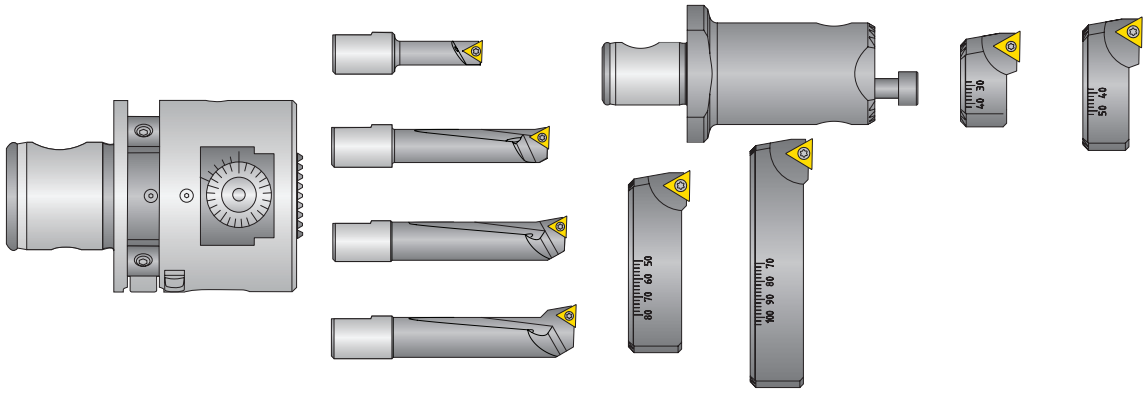

Diameter Range: 10.00 mm - 102.00 mm

Kit Components

	Boring Head	Boring Bars: Boring Bar Range	Boring Bars: Part No.	Serrated Tool Body & Insert Holders: Serrated Tool Body	Serrated Tool Body & Insert Holders: Insert Holder Range	Serrated Tool Body & Insert Holders: Part No.	Insert Holders for Boring Head: Insert Holder Range	Insert Holders for Boring Head: Part No.	Insert Holders for Boring Head: Clamping Piece	Service Keys	Kit No.
	536001	10.00 - 15.00	218059	236021	29.00 - 41.00	236022	52.00 - 77.00	236026	236020	115575 (s2.5)	**103051**
ⓜ		15.00 - 20.00	081045		40.00 - 53.00	236024	76.00 - 102.00	236028		215403 (s4)	
		20.00 - 25.00	081046							215521 (s5)	
		25.00 - 30.00	081047							115591 (T7)	

NOTE: Balancing elements and inserts sold separately



B10-M: 12-13 | B10-A: 18 | B10-H | B10: VI-VII

Key on B10-A: 1

ⓜ = Metric (mm)

Inserts sold separately

IMPORTANT: Max spindle speed refers to maximum possible speed for an individual boring head and is not a recommended parameter. Refer to page B10-M: 12 for recommended application-specific parameters. Factory technical assistance is available for your specific applications through our Application Engineering department.
email: **engineering.eu@alliedmachine.com**

248 Product Overview



248
VERSATILE FINE BORING

Compact design. Precision boring.

The Wohlhaupter® 248 compact boring head allows for higher spindle speeds and achieves long-reach boring jobs. Its cylindrical shank provides variable length adjustments up to 10xD.

Test this ***compact design*** for finish machining today.

- Diameter range: 3.00 mm - 30.20 mm
- Length adjustment up to 10xD
- Through coolant boring tool
- 0.01 mm adjust on diameter
- Max spindle speed: 20,000 RPM



IMPORTANT: Max spindle speed refers to maximum possible speed for an individual boring head and is not a recommended parameter. Refer to page B10-M: 12 for recommended application-specific parameters. Factory technical assistance is available for your specific applications through our Application Engineering department.
email: **engineering.eu@alliedmachine.com**



248 Head



Insert Holder
Ø 15.90 mm - 30.20 mm



Adapter



Boring Bar
Ø 3.70 mm - 16.00 mm



Adapter



Mini Boring Bar
Ø 3.00 mm - 6.00 mm

OPERATION **VERSATILITY**

from **3.00 mm** to **30.20 mm**

Boring Heads

Diameter Range: 15.90 mm - 30.20 mm



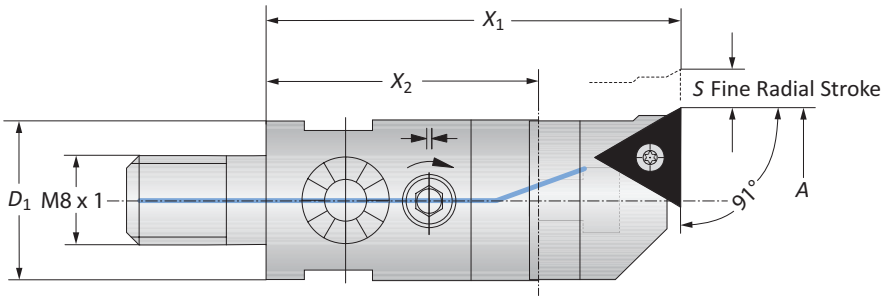

Boring Connection	Boring Range A	Boring Head X_1	X_2	D_1	S	Weight	Insert Form	Part No. Insert Holder	Boring Head
M8 x 1	15.90 - 20.10	42.00	26.00	15.00	1.40	0.06 (kg)	20*	**248051**	**248001**
M8 x 1	15.90 - 20.10	42.00	26.00	15.00	1.40	0.06 (kg)	101	**248054**	**248001**
M8 x 1	19.90 - 24.80	46.00	30.00	18.00	1.80	0.09 (kg)	20*	**248052**	**248002**
M8 x 1	19.90 - 24.80	46.00	30.00	18.00	1.80	0.09 (kg)	101	**248055**	**248002**
M8 x 1	24.50 - 30.20	46.00	30.00	23.00	2.30	0.13 (kg)	20*	**248053**	**248003**
M8 x 1	24.50 - 30.20	46.00	30.00	23.00	2.30	0.13 (kg)	101	**248056**	**248003**

*Not suitable for indexable inserts with a radius of 0.80 mm

B10-M: 12-13 | B10-A: 34 | B10: VI-VII

Key on B10-A: 1

m = Metric (mm)

IMPORTANT: Max spindle speed refers to maximum possible speed for an individual boring head and is not a recommended parameter. Refer to page B10-M: 12 for recommended application-specific parameters. Factory technical assistance is available for your specific applications through our Application Engineering department.
email: **engineering.eu@alliedmachine.com**

Mini Boring Bars

WHC05 | WHW04 | WBN150 | Diameter Range: 3.00 mm - 6.00 mm



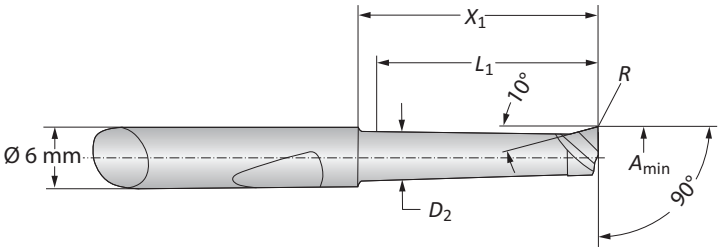

Mini Boring Bars

	Boring Range	Boring Bar					Part No.		
	A_{min}	D_1	D_2	X_1	L_1	R	Coated Carbide	Uncoated Carbide	CBN
	3.00	6.00	2.60	11.50	10.00	0.10	**081306WHC05**	–	**081322WBN150**
	3.00	6.00	2.60	16.50	15.00	0.10	**081307WHC05**	**081307WHW04**	–
	4.00	6.00	3.60	12.00	10.00	0.20	**081308WHC05**	–	**081317WBN150**
	4.00	6.00	3.60	17.00	15.00	0.20	**081309WHC05**	–	**081341WBN150**
	4.00	6.00	3.60	22.00	20.00	0.20	**081310WHC05**	**081310WHW04**	–
ⓜ	5.00	6.00	4.60	12.00	10.00	0.20	**081311WHC05**	–	**081318WBN150**
	5.00	6.00	4.60	22.00	20.00	0.20	**081312WHC05**	–	**081319WBN150**
	5.00	6.00	4.60	32.00	30.00	0.20	**081313WHC05**	**081313WHW04**	–
	6.00	6.00	5.60	22.00	20.00	0.20	**081314WHC05**	–	**081320WBN150**
	6.00	6.00	5.60	32.00	30.00	0.20	**081315WHC05**	–	**081321WBN150**
	6.00	6.00	5.60	42.00	40.00	0.20	**081316WHC05**	**081316WHW04**	–

Adapter

	Boring Head	Adapter				Part No.
		X_1	D_1	D_2	D_3	
ⓜ	248003	32.00	23.00	6.00	22.00	**248071**

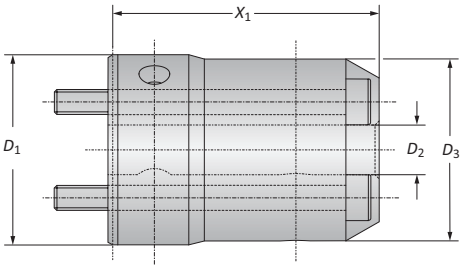

B10-M: 12-13 | B10-A: 34 | B10: VI-VII

Key on B10-A: 1

ⓜ = Metric (mm)

Boring Bars

Diameter Range: 3.70 mm - 16.00 mm

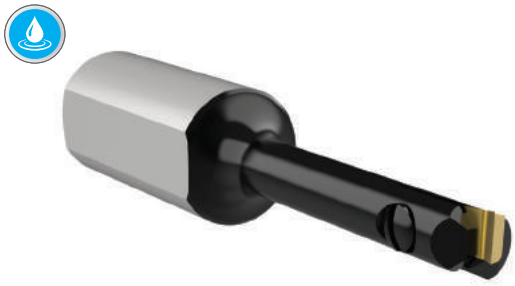

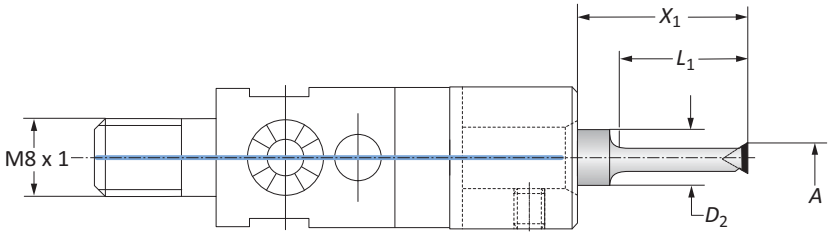

Boring Bars

	Boring Range	Boring Bar				
	A	D_2	X_1	L_1	Insert Form	Part No.
	3.70 - 5.00	8.00	20.80	18.00	325*	**218074**
	4.90 - 6.00	8.00	26.00	23.00	47*	**218075**
	5.90 - 8.00	8.00	27.00	25.00	211*	**218076**
	7.90 - 10.00	8.00	30.50	30.00	211*	**218077**
m	9.90 - 12.00	8.00	35.00	35.00	20*	**218079**
	9.90 - 12.00	8.00	35.00	35.00	101	**218082**
	11.90 - 14.00	10.00	45.00	45.00	20*	**218080**
	11.90 - 14.00	10.00	45.00	45.00	101	**218083**
	13.90 - 16.00	10.00	50.00	50.00	20*	**218081**
	13.90 - 16.00	10.00	50.00	50.00	101	**218084**

*Not suitable for indexable inserts with a radius of 0.80 mm

Adapters

	Boring Head	Adapter		Part No.
		D_1	D_2	
m	248002	18.00	8.00	**248063**
	248003	23.00	8.00	**248064**
	248003	23.00	10.00	**248065**

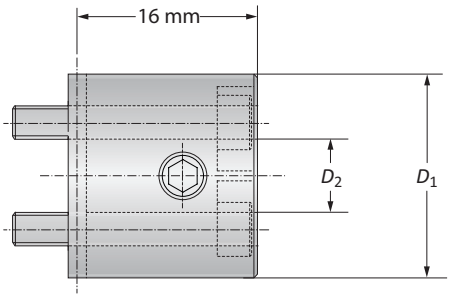

B10-M: 12-13
Key on B10-A: 1
B10-H
B10: VI-VII
B10-A: 32

m = Metric (mm)
Inserts sold separately

Adapters



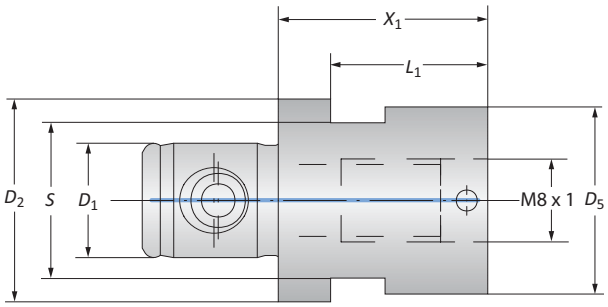

Adapters

MVS Connection $D_2 \mid D_1$	Boring Connection	Adapter X_1	L_1	S	D_5	Weight	Service Key	Part No.
19.5 - 11	M8 x 1	20.00	15.00	15/P	18.00	0.05 (kg)	15 S / P	**219168**
23 - 11	M8 x 1	20.00	–	19/P	23.00	0.07 (kg)	19 S / P	**219169**



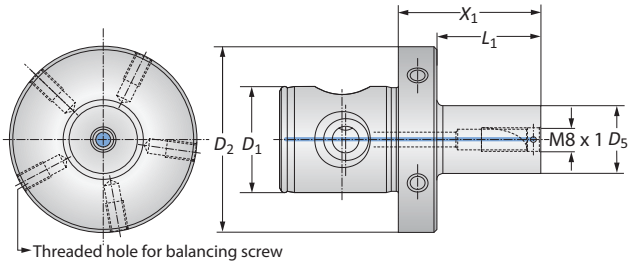

Balanced Adapters

MVS Connection $D_2 \mid D_1$	Boring Connection	Adapter X_1	L_1	D_5	Weight	Balancing Screw	Part No.
50 - 28	M8 x 1	32.00	19.00	15.00	0.35 (kg)	M6 x 1 x 10	**219185**
50 - 28	M8 x 1	48.00	35.00	18.00	0.40 (kg)	M6 x 1 x 10	**219176**
50 - 28	M8 x 1	48.00	35.00	23.00	0.45 (kg)	M6 x 1 x 10	**219177**

NOTE: Balance refers to a specific residual imbalance of ≤ 10 g mm/kg



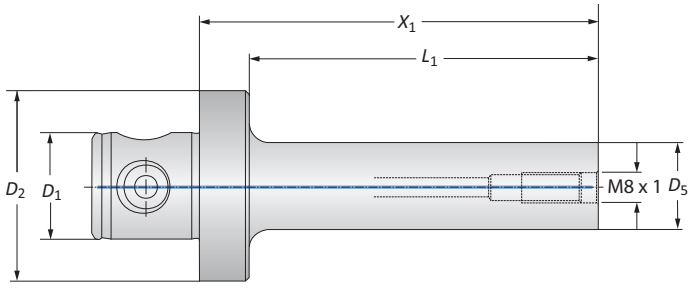

Vibration Reducing Heavy Metal Adapters

MVS Connection $D_2 \mid D_1$	Boring Connection	Adapter X_1	L_1	D_5	Weight	Part No.
50 - 28	M8 x 1	68.00	55.00	15.00	0.80 (kg)	**248147**
50 - 28	M8 x 1	84.00	71.00	19.00	1.00 (kg)	**248148**
50 - 28	M8 x 1	104.00	91.00	23.00	1.30 (kg)	**248149**

B10-M: 12-13
Key on B10-A: 1
B10-A: 30
B10-A: 34
B10: VI-VII

Ⓜ = Metric (mm)

Shanks

Steel | Carbide



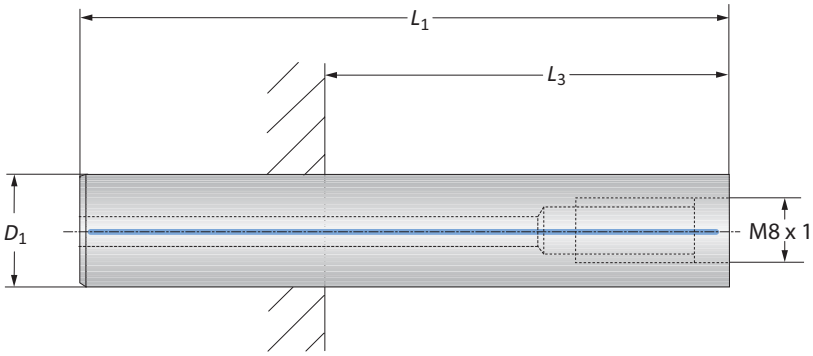

Steel Shanks

	Connection	Shank D_1	Shank L_1	Shank $L_{3\ max}$*	$L_{3\ min}$* SK 40+50	$L_{3\ min}$* HSK-A 63	$L_{3\ min}$* HSK-A 100	Weight	Part No.
ⓜ	M8 x 1	15.00	85.00	37.00	–	–	–	0.10 (kg)	**248136**
ⓜ	M8 x 1	18.00	100.00	52.00	–	5.00	12.00	0.20 (kg)	**248137**
ⓜ	M8 x 1	23.00	117.00	69.00	–	22.00	29.00	0.40 (kg)	**248138**

*L_3 dimensions apply to collet chucks



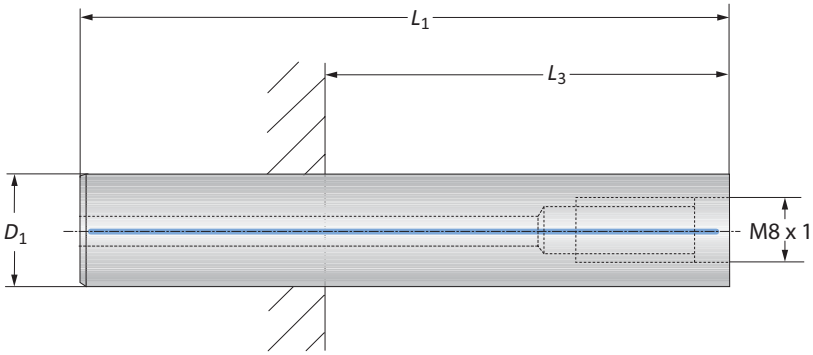

Carbide Shanks

	Connection	Shank D_1	Shank L_1	Shank $L_{3\ max}$*	$L_{3\ min}$* SK 40	$L_{3\ min}$* SK 50	$L_{3\ min}$* HSK-A 63	$L_{3\ min}$* HSK-A 100	Weight	Part No.
ⓜ	M8 x 1	15.00	130.00	82.00	20.00	20.00	35.00	42.00	0.30 (kg)	**248142**
ⓜ	M8 x 1	18.00	155.00	107.00	39.00	21.00	60.00	67.00	0.60 (kg)	**248143**
ⓜ	M8 x 1	23.00	180.00	132.00	64.00	46.00	85.00	92.00	1.10 (kg)	**248144**
ⓜ	M8 x 1	23.00	242.00	194.00	126.00	108.00	147.00	154.00	1.40 (kg)	**248145**

*L_3 dimensions apply to collet chucks

B10-M: 12-13
Key on B10-A: 1
B10-A: 30
B10: vi-vii

ⓜ = Metric (mm)

Accessories

Clamping Elements

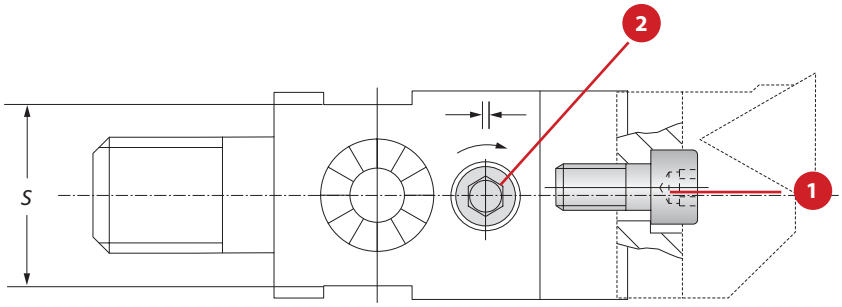

Clamping Elements for Boring Heads

	Boring Head	Service Key S / Type	1 Cap Screw Part No.	1 Cap Screw Service Key	2 Set Screw Part No.	2 Set Screw Service Key
	248001	13 S / P	**315631**	s3 / A	**315629**	s2 / A
ⓜ	248002	15 S / P	**315631**	s3 / A	**315684**	s2 / A
	248003	19 S / P	**315631**	s3 / A	**315687**	s2 / A

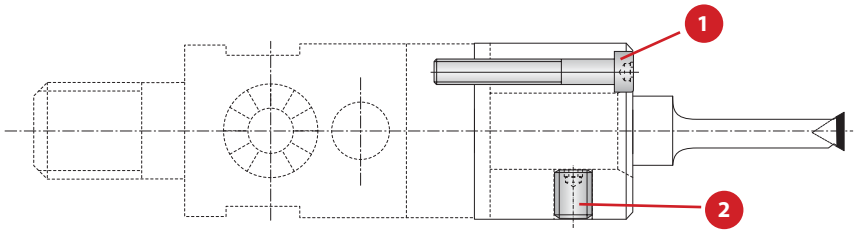

Clamping Elements for Adapters

	Adapters	1 Cap Screw Part No.	1 Cap Screw Service Key	2 Set Screw Part No.	2 Set Screw Service Key
	248063	**315801**	S 2.5 / A	**115136**	S 2.5 / A
ⓜ	248064	**315801**	S 2.5 / A	**031141**	S 2.5 / A
	248065	**315801**	S 2.5 / A	**031141**	S 2.5 / A

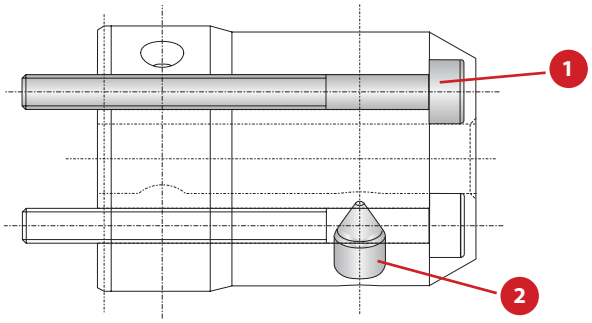

Screws for Adapter

	Adapters	1 Cap Screw Part No.	1 Cap Screw Service Key	2 Set Screw Part No.	2 Set Screw Service Key
ⓜ	248071	**515166**	S 2.5 / A	**415244**	S 3 / A

ⓜ = Metric (mm)

PrimeBore Product Overview

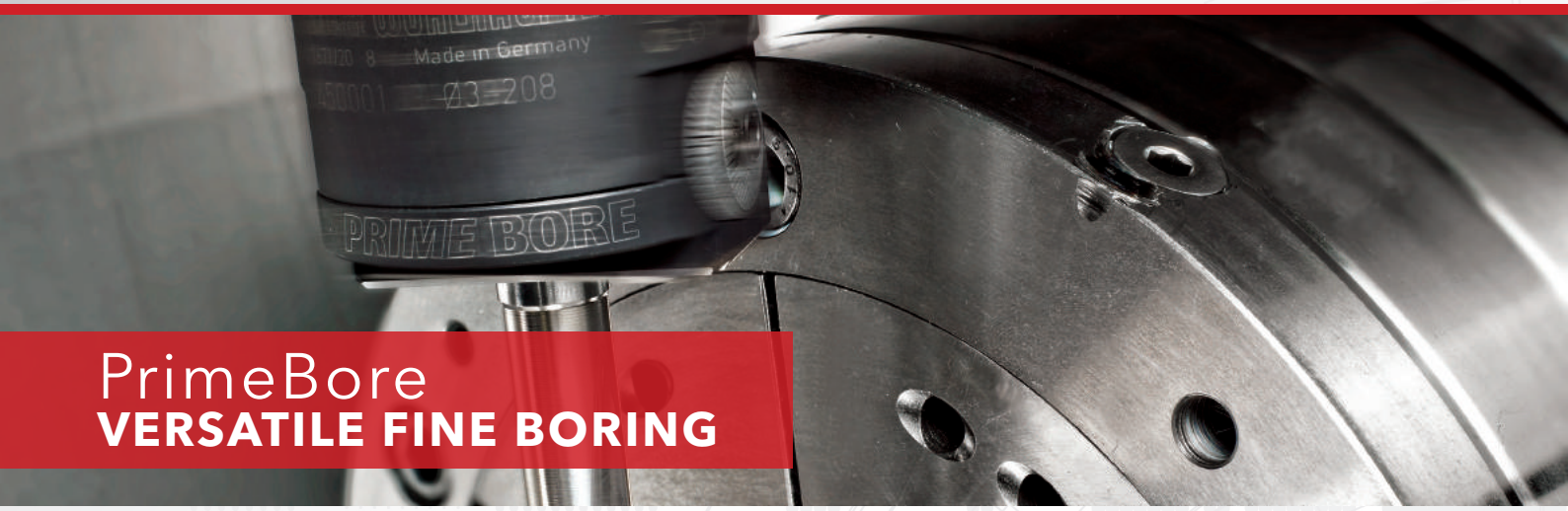

PrimeBore
VERSATILE FINE BORING

Advancing versatile technology.

With over 30 years of development, the Wohlhaupter® PrimeBore boring head offers versatility and precision. The PrimeBore head can bore multiple hole sizes ranging from 3.00 mm - 208.00 mm with our broad range of compatible boring bars.

Complete your boring job with ***technology that continues to advance***.

- Diameter range: 3.00 mm - 208.00 mm
- Ease the stress of working on different day-to-day projects with boring kits
- 0.002 mm adjust on diameter
- Economical precision and versatility
- Max spindle speed: 12,000 RPM
- Through coolant



IMPORTANT: Max spindle speed refers to maximum possible speed for an individual boring head and is not a recommended parameter. Refer to page B10-M: 12 for recommended application-specific parameters. Factory technical assistance is available for your specific applications through our Application Engineering department.
email: **engineering.eu@alliedmachine.com**

PRIME BORE



PrimeBore Head

Coolant Delivery System

Outside Turning
Ø 4.00 mm - 66.00 mm

Coolant Delivery System

Serrated Slide

Serrated Tool Body

Carbide Boring Bar
Ø 10.00 mm - 20.00 mm

Heavy Metal Boring Bar
Ø 6.00 mm - 10.00 mm

Steel Boring Bar
Ø 6.00 mm - 24.00 mm

Adapter

Mini-Boring Bar
Ø 3.00 mm - 10.00 mm

Serrated Slide

Counterweight

Insert Holder
Ø 24.00 mm - 128.00 mm

Insert Holder
Ø 68.00 mm - 208.00 mm

Outside Turning
Ø 4.00 mm - 66.00 mm



OPERATION **VERSATILITY**

from **3.00 mm** to **208.00 mm**
plus outside turning

Boring Heads

Diameter Range: 3.00 mm - 208.00 mm



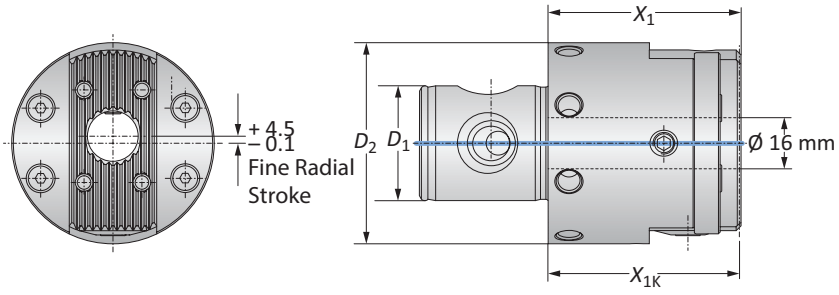

MVS Connection D_2 | D_1	Boring Range	Boring Head X_1	Boring Head X_{1K}	Weight	Part No.
63 - 36	3.00 - 208.00	60.00	59.50	1.30 (kg)	**450001**

B10-M: 12-13 | B10-F | B10: VI-VII

Key on B10-A: 1

Ⓜ = Metric (mm)

IMPORTANT: Max spindle speed refers to maximum possible speed for an individual boring head and is not a recommended parameter. Refer to page B10-M: 12 for recommended application-specific parameters. Factory technical assistance is available for your specific applications through our Application Engineering department.
email: **engineering.eu@alliedmachine.com**

Mini Boring Bars

WHC05 | WHW04 | WBN150 | Diameter Range: 3.00 mm - 10.00 mm



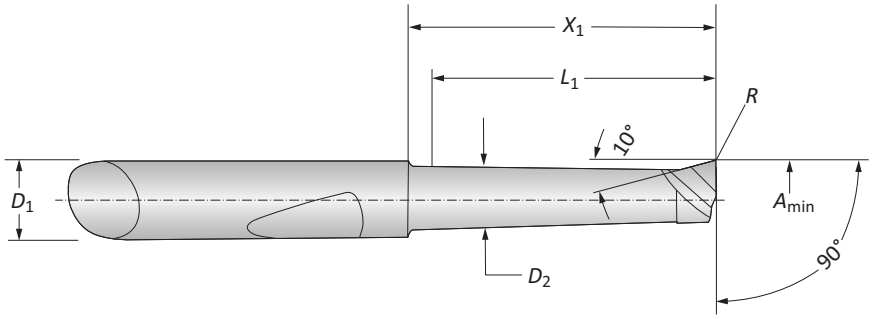

Mini Boring Bars

	Boring Range	Boring Bar					Part No.		
	A_{min}	D_1	D_2	X_1	L_1	R	Coated Carbide	Uncoated Carbide	CBN
	3.00	6.00	2.60	11.50	10.00	0.10	**081306WHC05**	–	**081322WBN150**
	3.00	6.00	2.60	16.50	15.00	0.10	**081307WHC05**	**081307WHW04**	–
	4.00	6.00	3.60	12.00	10.00	0.20	**081308WHC05**	–	**081317WBN150**
	4.00	6.00	3.60	17.00	15.00	0.20	**081309WHC05**	–	**081341WBN150**
	4.00	6.00	3.60	22.00	20.00	0.20	**081310WHC05**	**081310WHW04**	–
	5.00	6.00	4.60	12.00	10.00	0.20	**081311WHC05**	–	**081318WBN150**
ⓜ	5.00	6.00	4.60	22.00	20.00	0.20	**081312WHC05**	–	**081319WBN150**
	5.00	6.00	4.60	32.00	30.00	0.20	**081313WHC05**	**081313WHW04**	–
	6.00	6.00	5.60	22.00	20.00	0.20	**081314WHC05**	–	**081320WBN150**
	6.00	6.00	5.60	32.00	30.00	0.20	**081315WHC05**	–	**081321WBN150**
	6.00	6.00	5.60	42.00	40.00	0.20	**081316WHC05**	**081316WHW04**	–
	8.00	8.00	7.60	25.00	23.00	0.20	**081323WHC05**	–	–
	8.00	8.00	7.60	50.00	48.00	0.20	**081324WHC05**	–	–

Adapters

	Adapter				
	D_3	D_5	X_1	L_1	Part No.
ⓜ	6.00	20.00	22.50	14.00	**319010**
	8.00	22.00	22.50	14.00	**236071**

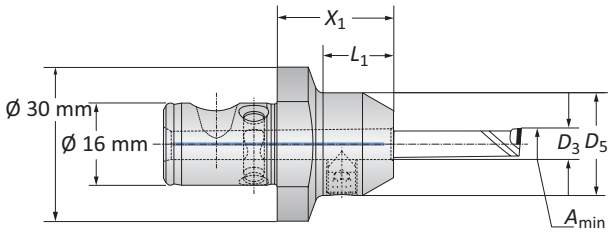

B10-M: 12-13

Key on B10-A: 1

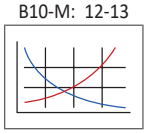

B10: VI-VII

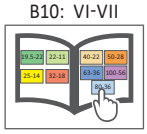

ⓜ = Metric (mm)

Boring Bars

Steel | Heavy Metal

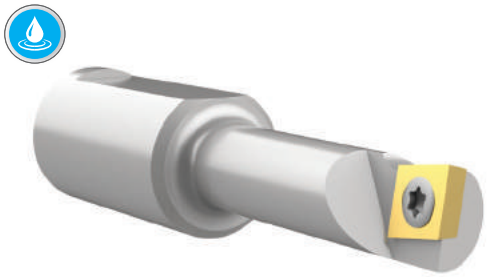

Form 101

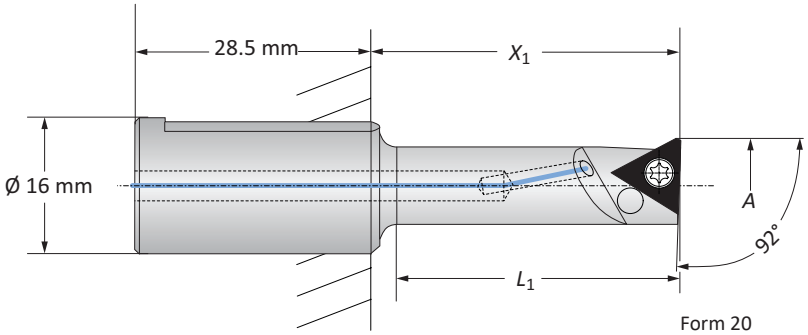

Form 20

Steel Boring Bars | Diameter Range: 6.00 mm - 24.00 mm

	Boring Range	Boring Bar				
	A	X_1	L_1	Weight	Insert Form	Part No.
	6.00 - 10.00	22.00 - 32.00	20.00	0.04 (kg)	211*	**450026**
	10.00 - 16.00	35.00 - 45.00	33.00	0.06 (kg)	101	**450027**
m	10.00 - 16.00	35.00 - 45.00	33.00	0.06 (kg)	20*	**450038**
	16.00 - 24.00	60.00 - 70.00	58.00	0.10 (kg)	101	**450028**
	16.00 - 24.00	60.00 - 70.00	58.00	0.10 (kg)	20*	**450039**

*Not suitable for indexable inserts with a radius of 0.80 mm



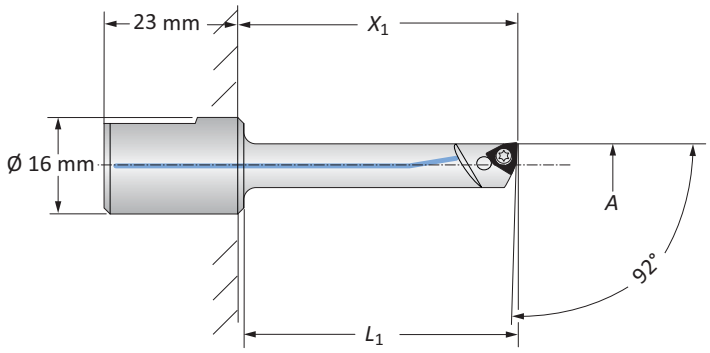

Heavy Metal Boring Bars | Diameter Range: 6.00 mm - 10.00 mm

	Boring Range	Boring Bar				
	A	X_1	L_1	Weight	Insert Form	Part No.
m	6.00 - 8.00	32.00	29.00	0.08 (kg)	211*	**081055**
	8.00 - 10.00	45.00	42.00	0.09 (kg)	211*	**218072**

*Not suitable for indexable inserts with a radius of 0.80 mm

B10-M: 12-13 | B10-H | B10: VI-VII

Key on B10-A: 1

m = Metric (mm)
Inserts sold separately

Boring Bars

Carbide | Diameter Range: 10.00 mm - 20.00 mm



Form 101

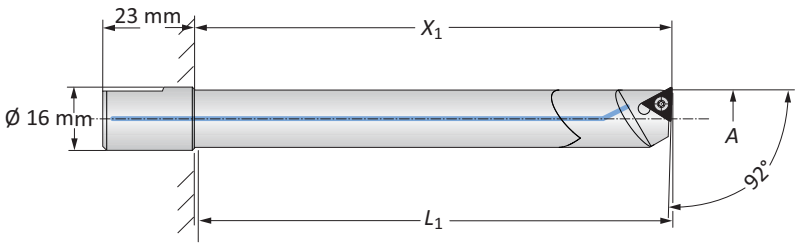

Form 20

Carbide Boring Bars

	Boring Range	Boring Bar						
	A	X_1	L_1	Weight	Insert Form	Part No.	Insert Form	Part No.
	10.00 - 12.00	55.00	52.00	0.07 (kg)	101	**218042**	20*	**218037**
	10.00 - 12.00	75.00	72.00	0.09 (kg)	101	**218032**	20*	**218029**
	12.00 - 14.00	70.00	67.00	0.10 (kg)	101	**218043**	20*	**218038**
ⓜ	12.00 - 14.00	90.00	87.00	0.15 (kg)	101	**218033**	20*	**218030**
	14.00 - 16.00	75.00	72.00	0.16 (kg)	101	**218044**	20*	**218039**
	14.00 - 16.00	100.00	97.00	0.20 (kg)	101	**218045**	20*	**218040**
	16.00 - 20.00	90.00	87.00	0.26 (kg)	101	**218046**	20*	**218041**
	16.00 - 20.00	120.00	117.00	0.33 (kg)	101	**218034**	20*	**218031**

*Not suitable for indexable inserts with a radius of 0.80 mm

B10-M: 12-13
Key on B10-A: 1
B10-H
B10: VI-VII

ⓜ = Metric (mm)
Inserts sold separately

Serrated Tool Bodies | Insert Holders

Diameter Range: 24.00 mm - 65.00 mm



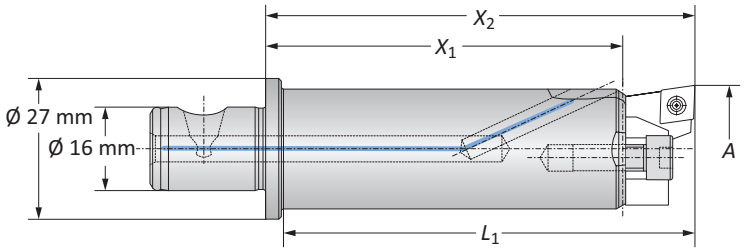

Serrated Tool Body

Boring Range	Serrated Tool Body					
	A	X_1	X_2	L_1	Weight	Part No.
m	24.00 - 65.00	68.00	82.00	79.00	0.20 (kg)	**450021**

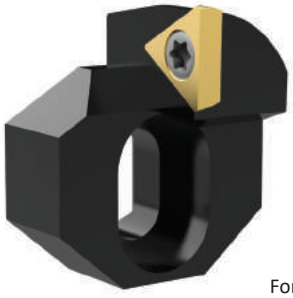

Form 20

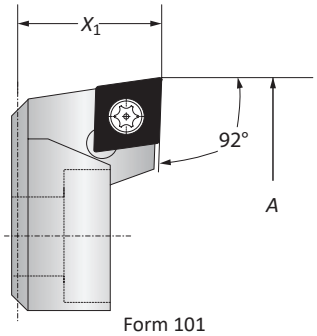

Form 101

Insert Holders

Boring Range	Insert Holder				
	A	X_1	Weight	Insert Form	Part No.
m	24.00 - 40.00	14.00	0.02 (kg)	101	**450022**
m	24.00 - 40.00	14.00	0.02 (kg)	20*	**450040**
m	40.00 - 65.00	14.00	0.03 (kg)	101	**450023**
m	40.00 - 65.00	14.00	0.03 (kg)	20*	**450041**

*Not suitable for indexable inserts with a radius of 0.80 mm

B10-M: 12-13 | B10-A: 47 | B10-H | B10: VI-VII
Key on B10-A:1

m = Metric (mm)
Inserts sold separately

www.alliedmachine.com | +44 (0) 1384 400 900 | enquiries.eu@alliedmachine.com

Serrated Slides | Insert Holders

Diameter Range: 65.00 mm - 128.00 mm

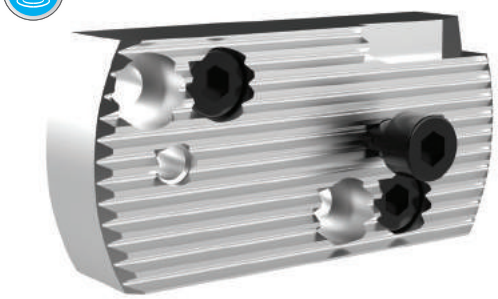

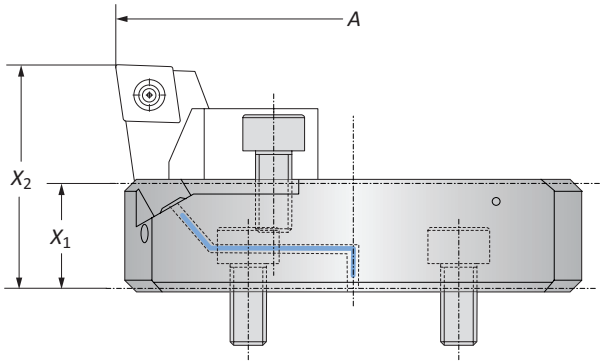

Serrated Slides

	Boring Range	Serrated Slide			
	A	X_1	X_2	Weight	Part No.
m	65.00 - 128.00	14.50	29.50	0.08 (kg)	**450024**

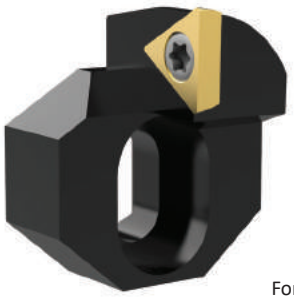

Form 20

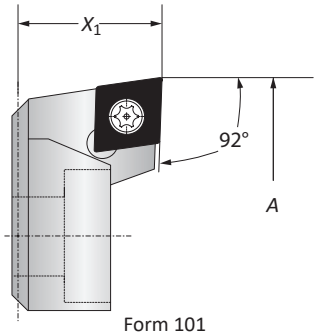

Form 101

Insert Holders

	Boring Range	Insert Holder			
	A	X_1	Weight	Insert Form	Part No.
m	65.00 - 128.00	14.00	0.03 (kg)	101	**450023**
	65.00 - 128.00	14.00	0.03 (kg)	20*	**450041**

*Not suitable for indexable inserts with a radius of 0.80 mm

Alu-Line Coolant Delivery Section

	Coolant Delivery Section		
	X_1	Weight	Part No.
m	26.75	0.01 (kg)	**450125**

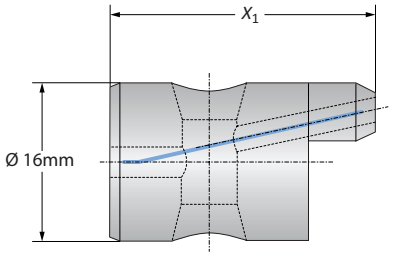

B10-M: 12-13
Key on B10-A: 1
B10-A: 47
B10-H
B10: VI-VII

m = Metric (mm)
Inserts sold separately

Alu-Line Serrated Slides | Insert Holders

Diameter Range: 68.00 mm - 208.00 mm



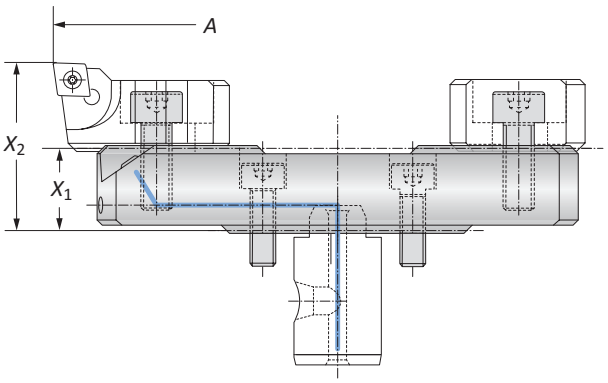

Alu-Line Serrated Slides

	Boring Range A	Serrated Slide X_1	Serrated Slide X_2	Weight	Part No.
	68.00 - 96.00	16.00	32.50	0.10 (kg)	**501054**
	96.00 - 124.00	16.00	32.50	0.10 (kg)	**501055**
m	124.00 - 152.00	16.00	32.50	0.20 (kg)	**501056**
	152.00 - 180.00	22.00	38.50	0.25 (kg)	**501058**
	180.00 - 208.00	22.00	38.50	0.30 (kg)	**501059**

Insert Holders

	Boring Range A	Weight	Insert Form	Part No.
m	68.00 - 208.00	0.05 (kg)	101	**502064**
m	68.00 - 208.00	0.05 (kg)	20	**502069**

NOTE: Other insert holders available upon request



Form 20

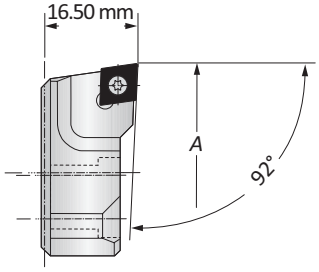

Form 101

Counterweight

	Counterweight X_1	Weight	Part No.
m	13.40	0.05 (kg)	**502165**

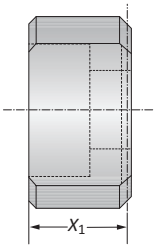

Alu-Line Coolant Delivery Section

	Coolant Delivery Section X_1	Weight	Part No.
m	25.50	0.01 (kg)	**450137**

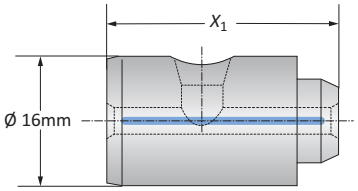

B10-M: 12-13 | B10-A: 47 | B10-H | B10: VI-VII

Key on B10-A:1

m = Metric (mm)

Inserts sold separately

www.alliedmachine.com | +44 (0) 1384 400 900 | enquiries.eu@alliedmachine.com

Outside Turning Insert Holders for Boring Heads

Diameter Range: 4.00 mm - 66.00 mm



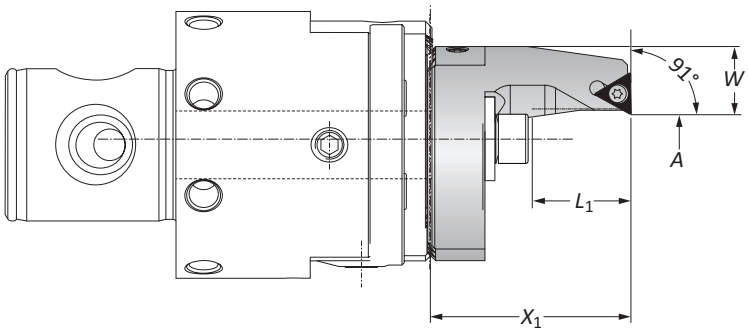

Type A Insert Holders | Diameter Range: 4.00 mm - 30.00 mm

	Boring Range A	Insert Holder X_1	Insert Holder L_1	Insert Holder W	Weight	Type	Insert Form	Part No.
m	4.00 - 17.50	40.50	20.00	16.60	0.10 (kg)	A	20*	**236081**
	16.50 - 30.00	50.50	30.00	11.10	0.10 (kg)	A	20*	**236082**

NOTE: Clockwise and neutral execution
*Not suitable for indexable inserts with a radius of 0.80 mm



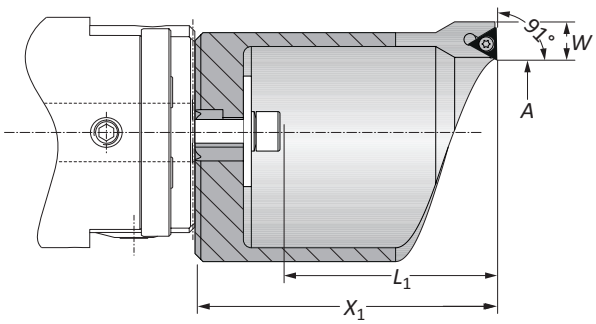

Type B Insert Holders | Diameter Range: 29.00 mm - 66.00 mm

	Boring Range A	Insert Holder X_1	Insert Holder L_1	Insert Holder W	Weight	Type	Insert Form	Part No.
m	29.00 - 44.00	75.50	54.00	9.60	0.30 (kg)	B	20*	**236083**
	43.00 - 66.00	100.50	79.00	9.60	0.40 (kg)	B	20*	**236084**

NOTE: Clockwise and neutral execution
*Not suitable for indexable inserts with a radius of 0.80 mm

Clamping Pieces for Outside Turning Insert Holders

	Insert Holder Type	Boring Range	Service Key	Complete Part No.
m	A	4.00 - 30.00	**s5**	**236088**
	B	29.00 - 66.00	**s5**	**236089**

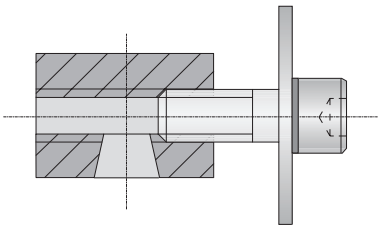

B10-M: 12-13 | B10-A: 47 | B10-H | B10: VI-VII

Key on B10-A: 1

m = Metric (mm)
Inserts sold separately

Outside Turning Serrated Slides | Insert Holders

Diameter Range: 2.00 mm - 114.00 mm



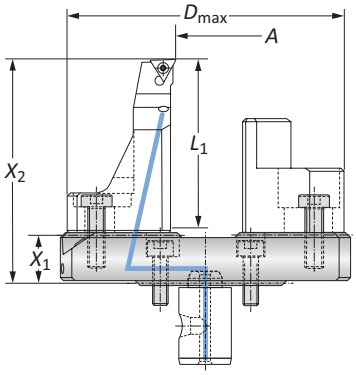

Outside Turning Serrated Slides

	Boring Range	Serrated Slide					
	A	X_1	X_2	L_1	D_{max}	Weight	Part No.
m	2.00 - 30.00	16.00	73.00	55.00	101.00	0.35 (kg)	**501064**
m	30.00 - 58.00	16.00	73.00	55.00	129.00	0.44 (kg)	**501065**
m	58.00 - 86.00	22.00	79.00	55.00	157.00	0.60 (kg)	**501066**
m	86.00 - 114.00	22.00	79.00	55.00	185.00	0.73 (kg)	**501067**



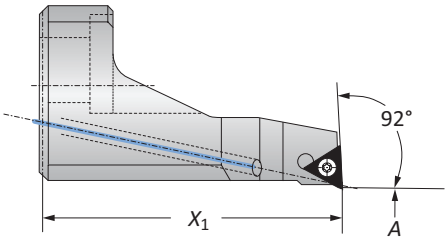

Insert Holder

	Outside Turning Range	Insert Holder			
	A	X_1	Weight	Insert Form	Part No.
m	2.00 - 114.00	57.00	0.15 (kg)	20	**502082**

NOTE: clockwise and neutral execution

Counterweight

	Counterweight		
	X_1	Weight	Part No.
m	37.75	0.16 (kg)	**502183**

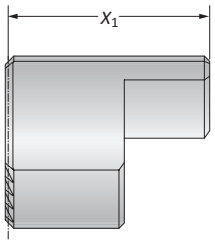

Coolant Delivery Section

	Coolant Delivery Section		
	X_1	Weight	Part No.
m	25.50	0.01 (kg)	**450137**

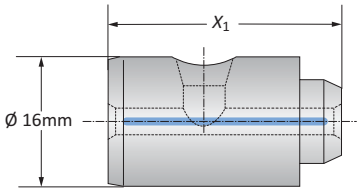

B10-M: 12-13 | B10-A: 47 | B10-H | B10: VI-VII

Key on B10-A:1

m = Metric (mm)
Inserts sold separately

Accessories

Clamping Elements

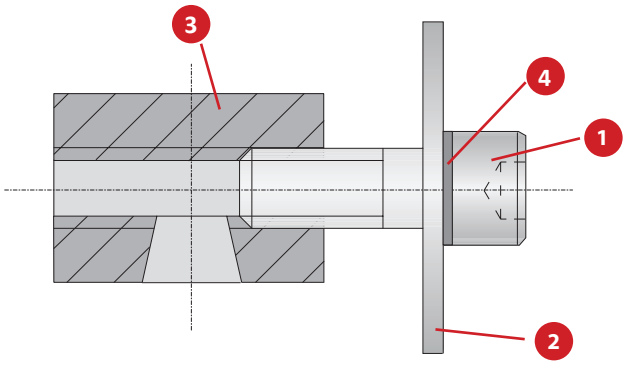

Clamping Elements for Insert Holders

	Boring Range	1 Cap Screw	Hex Size	2 Washer	3 Clamping Nut	4 Locking Washer	Complete Part No.
ⓜ	4.00 - 30.00	**070153**	**s5**	**315155**	**236120**	**215254**	**236088**
	29.00 - 66.00	**070153**	**s5**	**315156**	**236120**	**215254**	**236089**

Clamping Elements for Serrated Tool Body

1 Cap Screw	Hex Size	2 Clamping Piece
027154	**s4**	**145184**

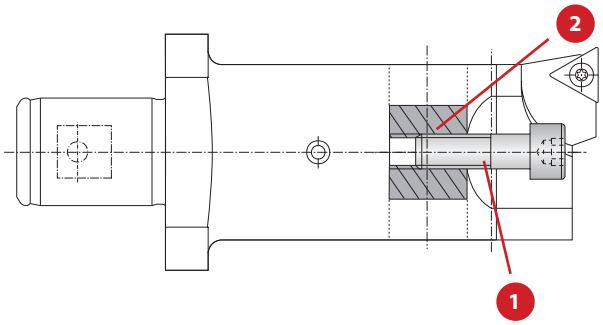

Thread Pin

Service Key	1 Part No.
S3 / A	**415244**

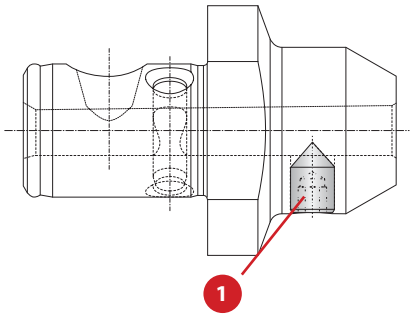

ⓜ = Metric (mm)

Kit Components

Form 101 | Diameter Range: 6.00 mm - 128.00 mm

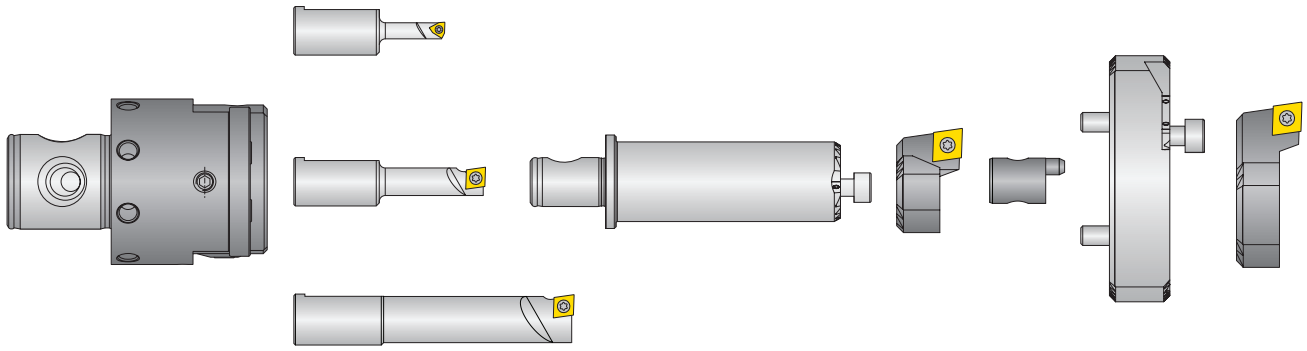

Diameter Range: 6.00 mm - 128.00 mm

	Kit Components										
	Boring Head	Boring Bars		Insert Holders		Serrated Tool Body	Serrated Slide	Coolant Delivery Section	Service Keys	Kit No.
		Boring Range	Part No.	Boring Range	Part No.					
Ⓜ	450001	6.00 - 10.00 10.00 - 16.00 16.00 - 24.00	450026 (Form 211) 450027 (Form 101) 450028 (Form 101)	24.00 - 40.00 40.00 - 65.00	450022 450023	450021	450024	450125	003195 (s4) 515451 (T6) 515452 (T8)	**103088**

NOTE: Inserts sold separately



B10-M: 12-13

Key on B10-A: 1

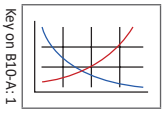

B10-H

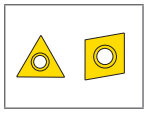

B10: VI-VII

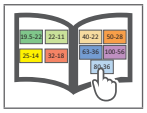

Ⓜ = Metric (mm)

Inserts sold separately

IMPORTANT: Max spindle speed refers to maximum possible speed for an individual boring head and is not a recommended parameter. Refer to page B10-M: 12 for recommended application-specific parameters. Factory technical assistance is available for your specific applications through our Application Engineering department.
email: **engineering.eu@alliedmachine.com**

Kit Components

Form 20 | Diameter Range: 6.00 mm - 128.00 mm

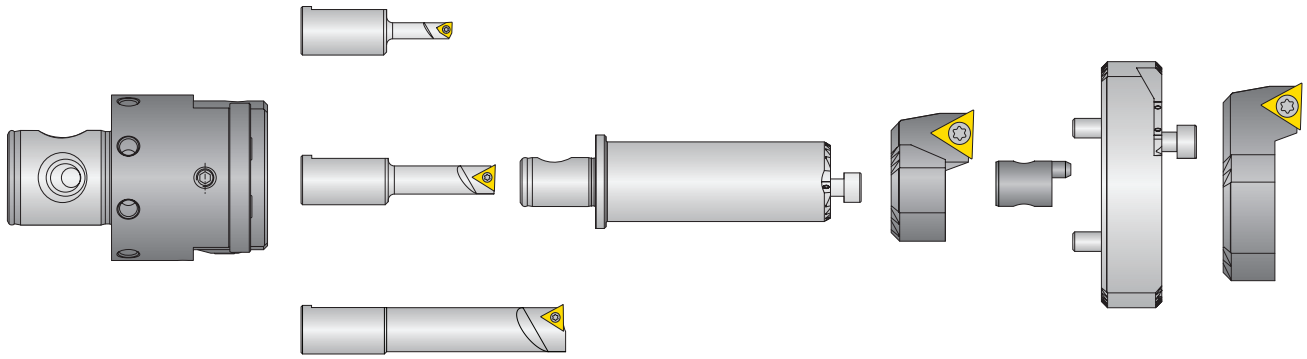

Diameter Range: 6.00 mm - 128.00 mm

	Kit Components										
		Boring Bars		Insert Holders						
	Boring Head	Boring Range	Part No.	Boring Range	Part No.	Serrated Tool Body	Serrated Slide	Coolant Delivery Section	Service Keys	Kit No.
ⓜ	450001	6.00 - 10.00 10.00 - 16.00 16.00 - 24.00	450026 (Form 211) 450038 (Form 20) 450039 (Form 20)	24.00 - 40.00 40.00 - 65.00	450040 450041	450021	450024	450125	003195 (s4) 515451 (T6) 515453 (T7)	**103089**

NOTE: Inserts sold separately



B10-M: 12-13 | B10-H | B10: VI-VII

Key on B10-A: 1

ⓜ = Metric (mm)
Inserts sold separately

IMPORTANT: Max spindle speed refers to maximum possible speed for an individual boring head and is not a recommended parameter. Refer to page B10-M: 12 for recommended application-specific parameters. Factory technical assistance is available for your specific applications through our Application Engineering department.
email: **engineering.eu@alliedmachine.com**

Digital 510 Product Overview



Digital *510*
VERSATILE FINE BORING

Improve your boring job with the Digital 510 boring head.

The Wohlhaupter® Digital 510 boring head offers precision, quality, and efficiency. Our integrated digital display makes the 510 the smallest precision boring tool available and allows for easy optoelectronic adjusting.

Experience ***precision boring*** for yourself.

- Diameter range: 0.40 mm - 12.00 mm
- Easy-to-read digital display
- Through coolant
- External counterweight for balancing
- Protected against coolant and dust according to IP65
- Fine adjustments of 0.002 mm
- Ideal for CAT40, BT30, HSK40
- Max spindle speed: 35,000 RPM



NOTE: Adjustment accuracy of 0.002 mm on diameter

IMPORTANT: Max spindle speed refers to maximum possible speed for an individual boring head and is not a recommended parameter. Refer to page B10-M: 12 for recommended application-specific parameters. Factory technical assistance is available for your specific applications through our Application Engineering department.
email: **engineering.eu@alliedmachine.com**

DIGITAL



NOTE: Adjustment accuracy of 0.002 mm on diameter

Digital 510001 Boring Head
0.40 mm - 12.00 mm

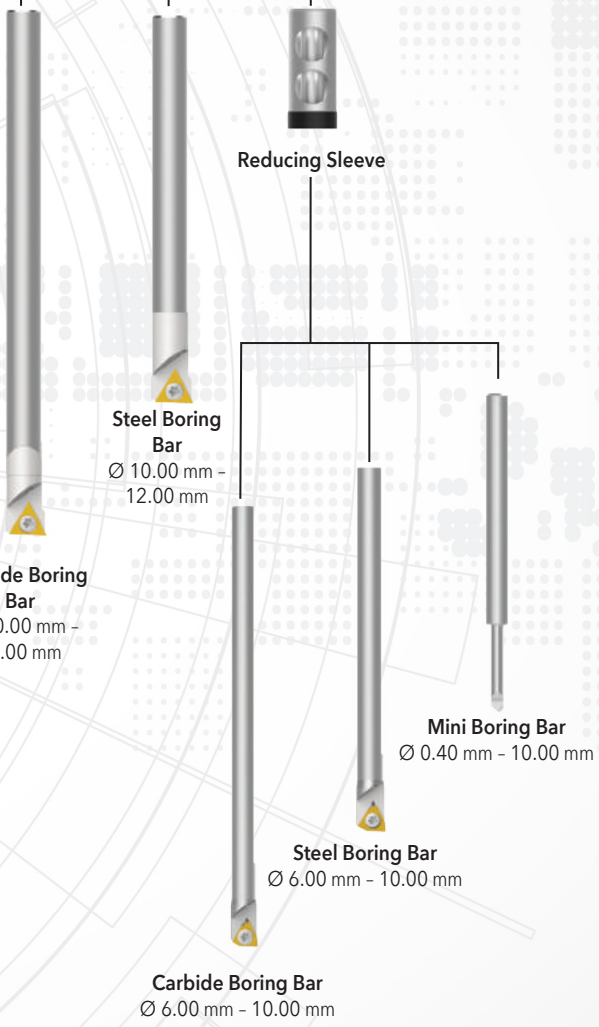

Carbide Boring Bar
Ø 10.00 mm - 12.00 mm

Steel Boring Bar
Ø 10.00 mm - 12.00 mm

Reducing Sleeve

Mini Boring Bar
Ø 0.40 mm - 10.00 mm

Steel Boring Bar
Ø 6.00 mm - 10.00 mm

Carbide Boring Bar
Ø 6.00 mm - 10.00 mm

OPERATION **VERSATILITY**

from **0.40 mm** to **12.00 mm**

Boring Heads

Diameter Range: 0.40 mm - 12.00 mm



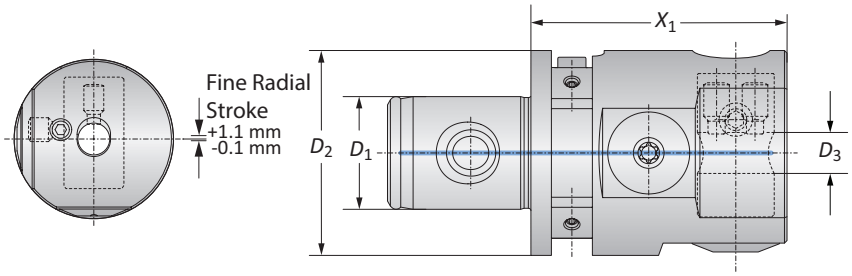

NOTE: Adjustment accuracy of 0.002 mm on diameter

Boring Heads

MVS Connection D_2 | D_1	Boring Range	Boring Head D_3	Boring Head X_1	Weight	Part No.
40 - 22	0.40 - 12.00	8.00	50.00	0.42 (kg)	**510001**

B10-M: 12-13 | B10-F | B10: VI-VII

Key on B10-A: 1

Ⓜ = Metric (mm)

IMPORTANT: Max spindle speed refers to maximum possible speed for an individual boring head and is not a recommended parameter. Refer to page B10-M: 12 for recommended application-specific parameters. Factory technical assistance is available for your specific applications through our Application Engineering department.
email: **engineering.eu@alliedmachine.com**

Mini Boring Bars

Diameter Range: 0.40 mm - 5.00 mm



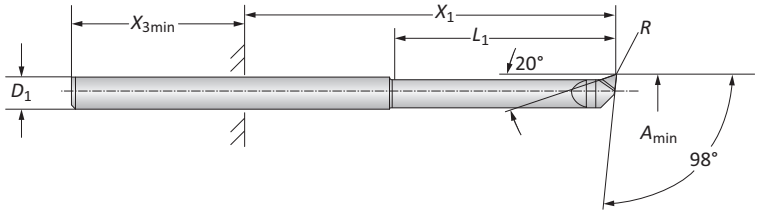

Mini Boring Bars

	Boring Range	Boring Bar					
	A_{min}	D_1	X_1	$X_{3\,min}$	L_1	R	Part No.
	0.40	4.00*	3.00 - 26.00	16.00	2.00	0.03	**081401WHC126**
	0.60	4.00*	4.00 - 27.00	16.00	3.00	0.04	**081402WHC126**
	0.80	4.00*	5.00 - 28.00	16.00	4.00	0.04	**081403WHC126**
ⓜ	1.00	4.00*	6.00 - 29.00	16.00	5.00	0.05	**081404WHC126**
	1.50	4.00*	8.50 - 31.50	16.00	7.50	0.05	**081405WHC126**
	2.00	4.00*	11.00 - 34.00	16.00	10.00	0.05	**081406WHC126**
	2.50	4.00*	13.50 - 36.50	16.00	12.50	0.05	**081407WHC126**
	2.80	4.00*	15.00 - 38.00	16.00	14.00	0.07	**081408WHC126**

*Fixture-through reducing sleeve required (B10-A: 58)

B10-M: 12-13
Key on B10-A: 1
B10: VI-VII

ⓜ = Metric (mm)

Mini Boring Bars

WHC05 | WHW04 | WBN150 | Diameter Range: 3.00 mm - 10.00 mm



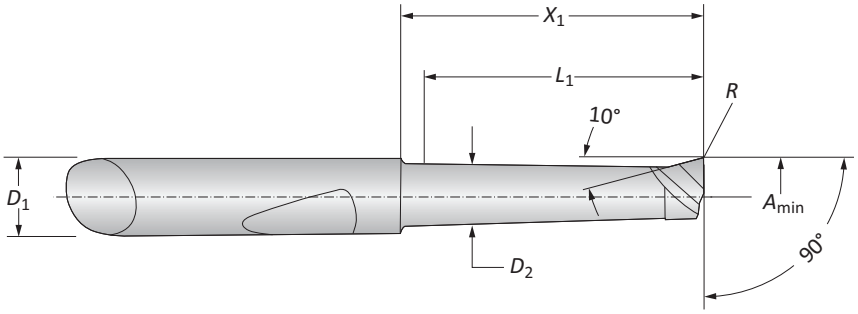

	Boring Range	Boring Bar					Part No.		
	A_{min}	D_1	D_2	X_1	L_1	R	Coated Carbide	Uncoated Carbide	CBN
	3.00	6.00*	2.60	11.50	10.00	0.10	**081306WHC05**	–	**081322WBN150**
	3.00	6.00*	2.60	16.50	15.00	0.10	**081307WHC05**	**081307WHW04**	–
	4.00	6.00*	3.60	12.00	10.00	0.20	**081308WHC05**	–	**081317WBN150**
	4.00	6.00*	3.60	17.00	15.00	0.20	**081309WHC05**	–	**081341WBN150**
	4.00	6.00*	3.60	22.00	20.00	0.20	**081310WHC05**	**081310WHW04**	–
	5.00	6.00*	4.60	12.00	10.00	0.20	**081311WHC05**	–	**081318WBN150**
ⓜ	5.00	6.00*	4.60	22.00	20.00	0.20	**081312WHC05**	–	**081319WBN150**
	5.00	6.00*	4.60	32.00	30.00	0.20	**081313WHC05**	**081313WHW04**	–
	6.00	6.00*	5.60	22.00	20.00	0.20	**081314WHC05**	–	**081320WBN150**
	6.00	6.00*	5.60	32.00	30.00	0.20	**081315WHC05**	–	**081321WBN150**
	6.00	6.00*	5.60	42.00	40.00	0.20	**081316WHC05**	**081316WHW04**	–
	8.00	8.00*	7.60	25.00	23.00	0.20	**081323WHC05**	–	–
	8.00	8.00*	7.60	50.00	48.00	0.20	**081324WHC05**	–	–

*Fixture-through reducing sleeve required (B10-A: 58)

B10-M: 12-13

Key on B10-A: 1

B10: VI-VII

ⓜ = Metric (mm)

www.alliedmachine.com | +44 (0) 1384 400 900 | enquiries.eu@alliedmachine.com

Boring Bars

Steel | Diameter Range: 6.00 mm - 12.00 mm



Form 101

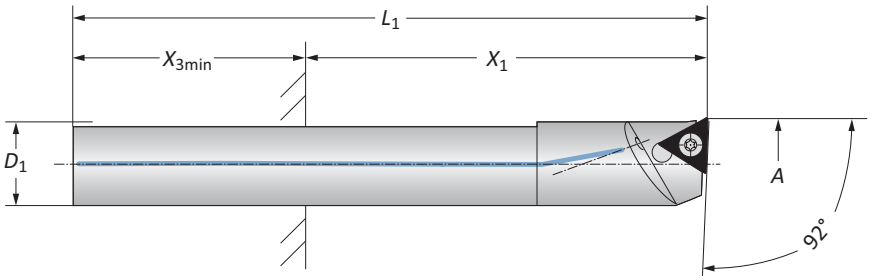

Form 20

	Boring Range	Boring Bar					Part No.			
	A	D_1	X_1	$X_{3\,min}$	L_1	Weight	Insert Form	Boring Bar	Insert Form	Boring Bar
ⓜ	6.00 - 8.00	5.00*	12.50 - 25.00	16.00	70.00	0.01 (kg)	211**	**514032**	–	–
ⓜ	8.00 - 10.00	7.00*	17.50 - 35.00	16.00	81.00	0.02 (kg)	211**	**514033**	–	–
ⓜ	10.00 - 12.00	8.00	20.00 - 40.00	19.00	85.00	0.03 (kg)	101	**514003**	20**	**514004**

*Fixture-through reducing sleeve required (B10-A: 58)
**Not suitable for indexable inserts with a radius of 0.8 mm

B10-M: 12-13 | B10-A: 58 | B10-H | B10: VI-VII
Key on B10-A: 1

ⓜ = Metric (mm)
Inserts sold separately

Boring Bars

Carbide | Diameter Range: 6.00 mm - 12.00 mm



Form 101

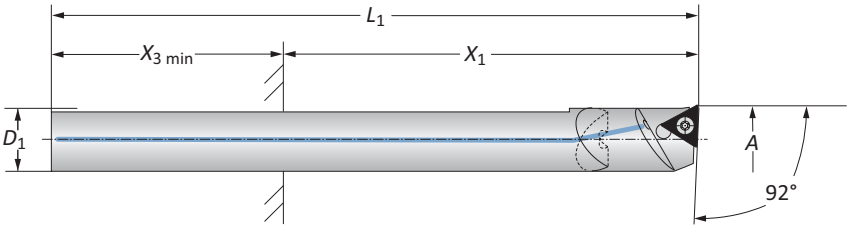

Form 20

	Boring Range	Boring Bar					Part No.			
	A	D_1	X_1	$X_{3\ min}$	L_1	Weight	Insert Form	Boring Bar	Insert Form	Boring Bar
ⓜ	6.00 - 8.00	5.00*	12.50 - 40.00	16.00	90.00	0.02 (kg)	211**	**514034**	–	–
ⓜ	8.00 - 10.00	7.00*	21.00 - 56.00	16.00	109.00	0.05 (kg)	211**	**514035**	–	–
ⓜ	10.00 - 12.00	8.00	22.00 - 64.00	19.00	117.00	0.07 (kg)	101	**514015**	20**	**514016**

*Fixture-through reducing sleeve required (B10-A: 58)
**Not suitable for indexable inserts with a radius of 0.80 mm

B10-M: 12-13 | B10-A: 58 | B10-H | B10: VI-VII
Key on B10-A: 1

ⓜ = Metric (mm)
Inserts sold separately

www.alliedmachine.com | +44 (0) 1384 400 900 | enquiries.eu@alliedmachine.com

Reducing Sleeves

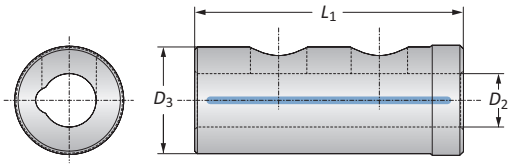

	Reducing Sleeve			
	D_3	D_2	L_1	Part No.
	8.00	4.00	20.00	**514201**
ⓜ	8.00	5.00	20.00	**514202**
	8.00	6.00	20.00	**514210**
	8.00	7.00	20.00	**514203**

B10-M: 12-13 | B10-A: 58 | B10-H | B10: VI-VII
Key on B10-A: 1

ⓜ = Metric (mm)
Inserts sold separately

Boring Head Accessories

No.	Part	Insert Form	Size	Part No. 510001
1	Clamping screw	–	–	**115985**
2	Thread pin for tool clamping	–	–	**070333**
3	Sealing ring for battery cover	–	–	**415895**
4	Battery*	–	–	**415896**
5	Battery cover with sealing ring	–	–	**501016**
6	Thread pin	–	–	**510114**
7	Insert screws	Form 20 Form 101 Form 211	T7 T8 T6	**115535** **115676** **515286**
8	Clamping Screw	-	T25	**415112**
9	Hex wrench	–	s2	**215473**
10	Hex wrench	–	s2.5 s3.0 s4.0	**415577** **415578** **115576**
11	Torx driver	–	T6 T7 T8 T20	**115537** **115591** **115590** **215150**
12	Torx screw-driver	Form 211 Form 20 Form 101	T6 T7 T8	**415507** **415508** **415514**

*Always change two batteries
NOTE: Please use VARTA batteries

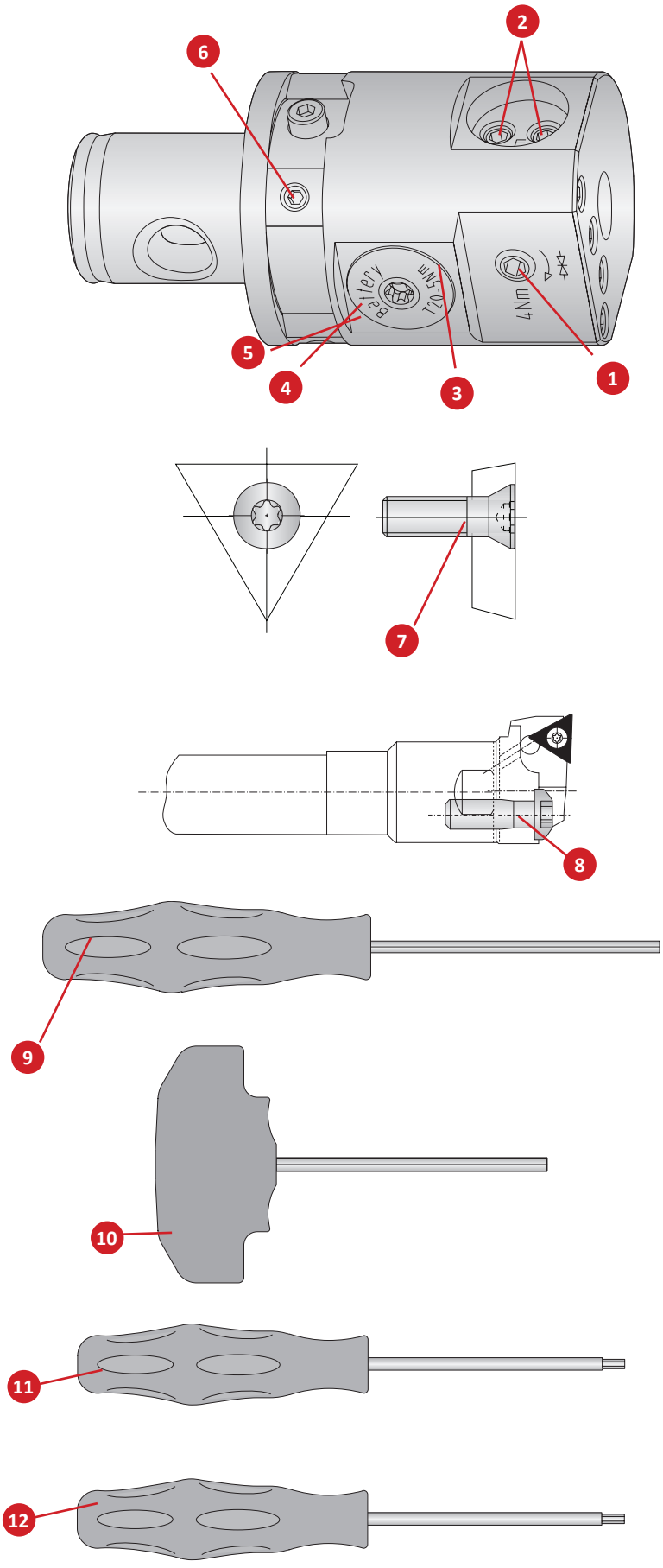

Notes

DigiBore Product Overview



DigiBore
VERSATILE FINE BORING

Advanced versatile technology.

The Wohlhaupter® DigiBore boring head provides internal balancing, which makes this tool the stress-free choice to meet your required surface finish. Its digital display allows for quick and accurate diameter corrections at the machine.

Engineered with the ***future in mind***.

- Diameter range: 3.00 mm - 208.00 mm
- Offers outside turning capabilities: 4.00 mm - 114.00 mm
- Digital readout for simple 0.002 mm diameter adjustments
- Ease the stress of working on different day-to-day projects with boring kits
- Automatic internal balancing improves surface finish, tool life, and accuracy
- Max spindle speed: 16,000 RPM
- Max coolant pressure: 40 bar



NOTE: Adjustment accuracy of 0.002 mm on diameter

IMPORTANT: Max spindle speed refers to maximum possible speed for an individual boring head and is not a recommended parameter. Refer to page B10-M: 12 for recommended application-specific parameters. Factory technical assistance is available for your specific applications through our Application Engineering department.
email: **engineering.eu@alliedmachine.com**

DIGIBORE



DigiBore Head

NOTE: Adjustment accuracy of 0.002 mm on diameter

Coolant Delivery System

Serrated Slide

Counterweight

Outside Turning
Ø 2.00 mm - 114.00 mm

Insert Holder
Ø 68.00 mm - 208.00 mm

Outside Turning
Ø 4.00 mm - 66.00 mm

Serrated Tool Body

Insert Holder
Ø 32.00 mm - 68.00 mm

Carbide Serrated Tool Body

Insert Holder
Ø 20.00 mm - 32.00 mm

Serrated Tool Body

Carbide Boring Bar
Ø 10.00 mm - 20.00 mm

Steel Boring Bar
Ø 6.00 mm - 20.00 mm

Adapter

Mini-Boring Bar
Ø 3.00 mm - 10.00 mm

OPERATION **VERSATILITY**

from **3.00 mm** to **208.00 mm**

plus outside turning



NOTE: Adjustment accuracy of 0.002 mm on diameter

Boring Heads

Diameter Range: 3.00 mm - 208.00 mm



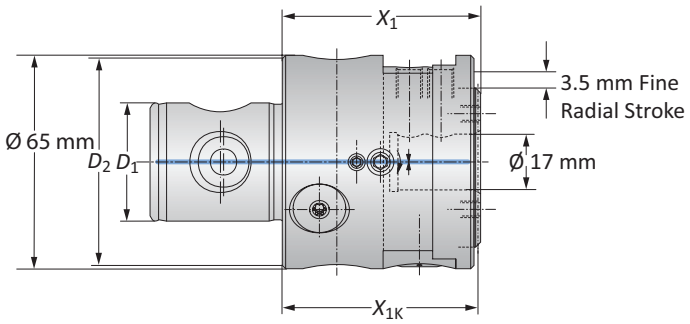

NOTE: Adjustment accuracy of 0.002 mm on diameter

DigiBore Boring Heads

MVS Connection D_2 | D_1	Boring Range	Boring Head X_1	Boring Head X_{1K}	Weight	Part No.
50 - 28	3.00 - 208.00	60.00	59.50	1.30 (kg)	**501005**
63 - 36	3.00 - 208.00	60.00	59.50	1.50 (kg)	**501001**



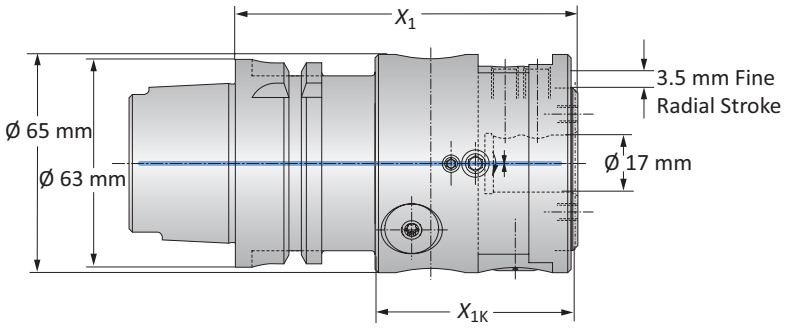

NOTE: Adjustment accuracy of 0.002 mm on diameter

DigiBore Boring Heads

Connection	Boring Range	Boring Head X_1	Boring Head X_{1K}	Weight	Part No.
HSK-A 63	3.00 - 208.00	102.00	59.50	2.10 (kg)	**501004**
PSC 63 (Polygon Shank)	3.00 - 208.00	102.00	59.50	2.10 (kg)	**501019**

B10-M: 12-13 | B10-F | B10: VI-VII

Key on B10-A: 1

Ⓜ = Metric (mm)

IMPORTANT: Max spindle speed refers to maximum possible speed for an individual boring head and is not a recommended parameter. Refer to page B10-M: 12 for recommended application-specific parameters. Factory technical assistance is available for your specific applications through our Application Engineering department.
email: **engineering.eu@alliedmachine.com**

Mini Boring Bars

WHC05 | WHW04 | WBN150 | Diameter Range: 3.00 mm - 10.00 mm



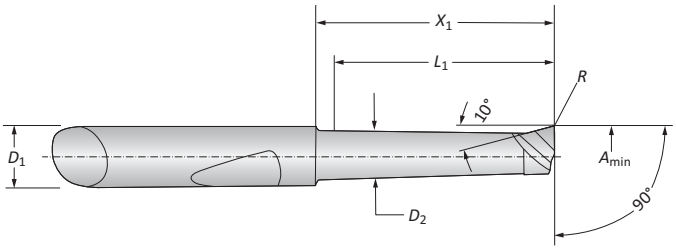

Mini Boring Bars

	Boring Range	Boring Bar					Part No.		
	A_{min}	D_1	D_2	X_1	L_1	R	Coated Carbide	Uncoated Carbide	CBN
	3.00	6.00	2.60	11.50	10.00	0.10	**081306WHC05**	–	**081322WBN150**
	3.00	6.00	2.60	16.50	15.00	0.10	**081307WHC05**	**081307WHW04**	–
	4.00	6.00	3.60	12.00	10.00	0.20	**081308WHC05**	–	**081317WBN150**
	4.00	6.00	3.60	17.00	15.00	0.20	**081309WHC05**	–	**081341WBN150**
	4.00	6.00	3.60	22.00	20.00	0.20	**081310WHC05**	**081310WHW04**	–
	5.00	6.00	4.60	12.00	10.00	0.20	**081311WHC05**	–	**081318WBN150**
m	5.00	6.00	4.60	22.00	20.00	0.20	**081312WHC05**	–	**081319WBN150**
	5.00	6.00	4.60	32.00	30.00	0.20	**081313WHC05**	**081313WHW04**	–
	6.00	6.00	5.60	22.00	20.00	0.20	**081314WHC05**	–	**081320WBN150**
	6.00	6.00	5.60	32.00	30.00	0.20	**081315WHC05**	–	**081321WBN150**
	6.00	6.00	5.60	42.00	40.00	0.20	**081316WHC05**	**081316WHW04**	–
	8.00	8.00	7.60	25.00	23.00	0.20	**081323WHC05**	–	–
	8.00	8.00	7.60	50.00	48.00	0.20	**081324WHC05**	–	–

Adapters

	Boring Range	Adapter					
	A_{min}	X_1	L_1	D_3	D_5	Weight	Part No.
m	3.00 - 8.00	22.50	14.00	6.00	20.00	0.04 (kg)	**501050**
	8.00 - 10.00	22.50	14.00	8.00	22.00	0.04 (kg)	**501051**

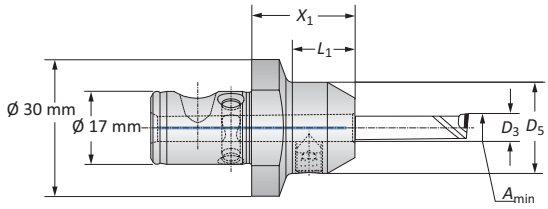

B10-M: 12-13

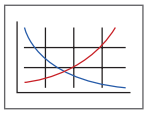

Key on B10-A: 1

B10: VI-VII

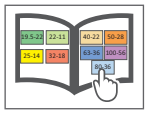

m = Metric (mm)

Boring Bars

Steel | Diameter Range: 6.00 mm - 20.00 mm



Form 101

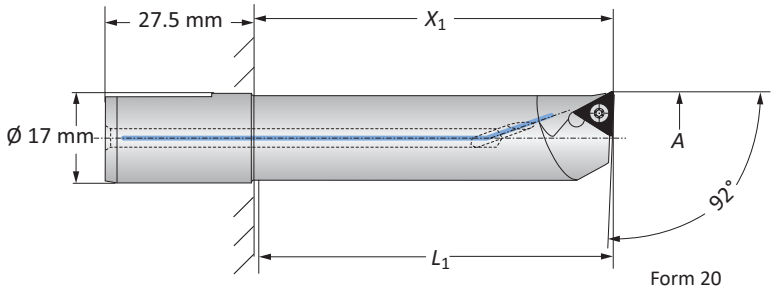

Form 20

	Boring Range	Boring Bar						
	A	X_1	L_1	Weight	Insert Form	Part No.	Insert Form	Part No.
ⓜ	6.00 - 8.00	22.00	19.00	0.05 (kg)	211*	**502068**	–	–
	8.00 - 10.00	30.00	27.00	0.05 (kg)	211*	**502066**	–	–
	10.00 - 11.00	30.00	27.00	0.06 (kg)	101	**502012**	20*	**502001**
	11.00 - 12.00	30.00	27.00	0.06 (kg)	101	**502075**	20*	**502070**
	12.00 - 13.00	45.00	42.00	0.07 (kg)	101	**502013**	20*	**502002**
	13.00 - 14.00	45.00	42.00	0.08 (kg)	101	**502076**	20*	**502071**
	14.00 - 15.00	50.00	47.00	0.08 (kg)	101	**502014**	20*	**502003**
	15.00 - 16.00	50.00	47.00	0.09 (kg)	101	**502077**	20*	**502072**
	16.00 - 17.00	60.00	57.00	0.10 (kg)	101	**502015**	20*	**502004**
	17.00 - 18.00	60.00	57.00	0.12 (kg)	101	**502078**	20*	**502073**
	18.00 - 19.00	68.00	65.00	0.13 (kg)	101	**502016**	20*	**502005**
	19.00 - 20.00	68.00	65.00	0.14 (kg)	101	**502079**	20*	**502074**

*Not suitable for indexable inserts with a radius of 0.80 mm

B10-M: 12-13 | B10-H | B10: VI-VII
Key on B10-A: 1

ⓜ = Metric (mm)
Inserts sold separately

www.alliedmachine.com | +44 (0) 1384 400 900 | enquiries.eu@alliedmachine.com

Boring Bars

Carbide | Diameter Range: 10.00 mm - 20.00 mm



Form 101

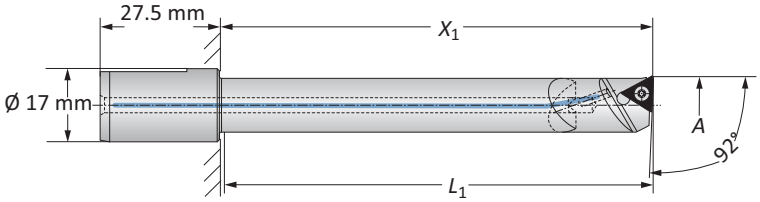

Form 20

	Boring Range	Boring Bar						
	A	X_1	L_1	Weight	Insert Form	Part No.	Insert Form	Part No.
	10.00 - 12.00	55.00	52.00	0.12 (kg)	101	**502093**	20*	**502088**
	10.00 - 12.00	70.00	67.00	0.14 (kg)	101	**502034**	20*	**502023**
	12.00 - 14.00	65.00	62.00	0.13 (kg)	101	**502094**	20*	**502089**
	12.00 - 14.00	85.00	82.00	0.18 (kg)	101	**502035**	20*	**502024**
ⓜ	14.00 - 16.00	75.00	72.00	0.17 (kg)	101	**502095**	20*	**502090**
	14.00 - 16.00	90.00	87.00	0.22 (kg)	101	**502036**	20*	**502025**
	16.00 - 18.00	85.00	82.00	0.26 (kg)	101	**502096**	20*	**502091**
	16.00 - 18.00	110.00	107.00	0.32 (kg)	101	**502037**	20*	**502026**
	18.00 - 20.00	95.00	92.00	0.28 (kg)	101	**502097**	20*	**502092**
	18.00 - 20.00	120.00	117.00	0.40 (kg)	101	**502038**	20*	**502027**

*Not suitable for indexable inserts with a radius of 0.80 mm

B10-M: 12-13
Key on B10-A: 1
B10-H
B10: VI-VII

ⓜ = Metric (mm)
Inserts sold separately

Serrated Tool Bodies | Insert Holders

Steel | Carbide | Diameter Range: 20.00 mm - 32.00 mm



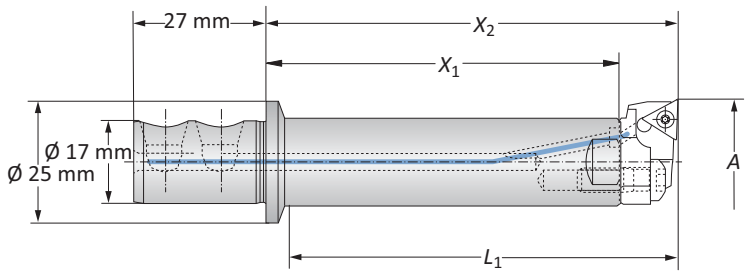

Steel Serrated Tool Body

	Boring Range	Serrated Tool Body					
	A	X_1	X_2	L_1	Weight	Part No.
m	20.00 - 32.00	72.00	84.00	77.00	0.20 (kg)	**502045**



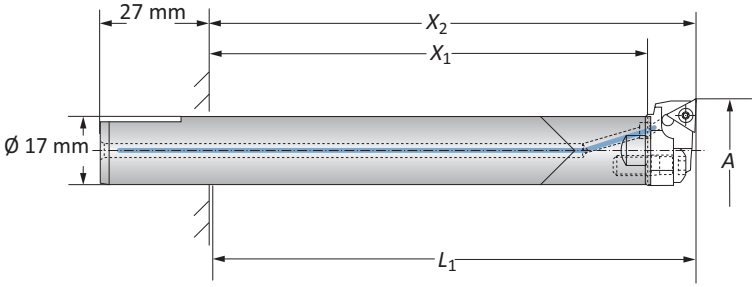

Carbide Serrated Tool Body

	Boring Range	Serrated Tool Body					
	A	X_1	X_2	L_1	Weight	Part No.
m	20.00 - 32.00	108.00	120.00	117.00	0.40 (kg)	**502062**

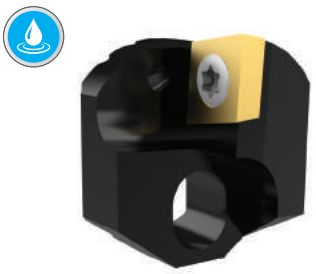

Form 101

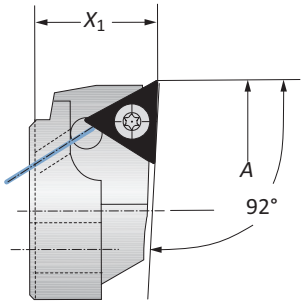

Form 20

Insert Holders

	Boring Range	Insert Holder					
	A	X_1	Weight	Insert Form	Part No.	Insert Form	Part No.
m	20.00 - 22.00	12.00	0.01 (kg)	101	**502052**	20*	**502046**
	22.00 - 24.00	12.00	0.01 (kg)	101	**502053**	20*	**502047**
	24.00 - 26.00	12.00	0.01 (kg)	101	**502054**	20*	**502048**
	26.00 - 28.00	12.00	0.01 (kg)	101	**502055**	20*	**502049**
	28.00 - 30.00	12.00	0.01 (kg)	101	**502056**	20*	**502050**
	30.00 - 32.00	12.00	0.01 (kg)	101	**502057**	20*	**502051**

*Not suitable for indexable inserts with a radius of 0.80 mm

B10-M: 12-13 | B10-A: 71 | B10-H | B10: VI-VII

Key on B10-A: 1

m = Metric (mm)

Inserts sold separately

Alu-Line Serrated Tool Bodies | Insert Holders

Diameter Range: 32.00 mm - 68.00 mm



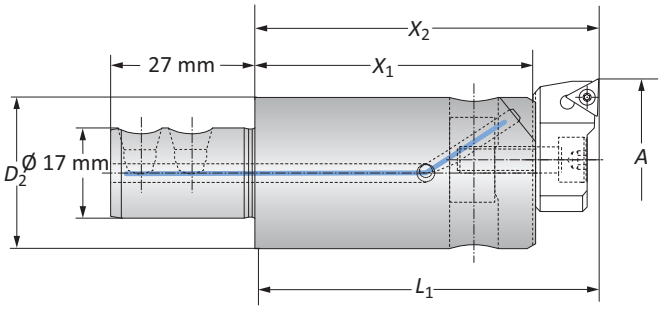

Alu-Line Serrated Tool Bodies

	Boring Range	Serrated Tool Body					
	A	D_2	X_1	X_2	L_1	Weight	Part No.
ⓜ	32.00 - 50.00	28.50	52.00	66.00	63.00	0.10 (kg)	**501052**
ⓜ	32.00 - 50.00	28.50	88.00	102.00	99.00	0.20 (kg)	**501060**
ⓜ	50.00 - 68.00	46.00	61.00	75.00	72.00	0.20 (kg)	**501053**
ⓜ	50.00 - 68.00	46.00	106.00	120.00	117.00	0.30 (kg)	**501061**

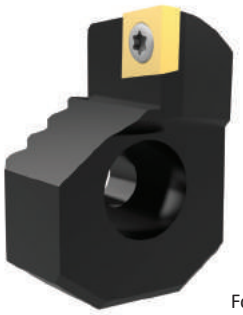

Form 101

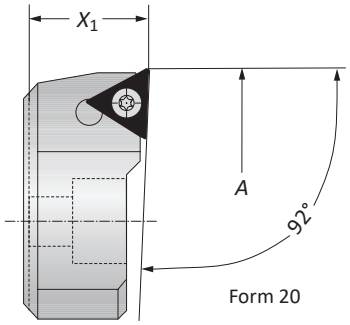

Form 20

Insert Holders

	Serrated Tool Body	Boring Range	Insert Holder			
		A	X_1	Weight	Insert Form	Part No.
ⓜ	**501052 / 501060**	32.00 - 41.00	14.00	0.03 (kg)	20*	**502060**
ⓜ		41.00 - 50.00	14.00	0.04 (kg)	20*	**502061**
ⓜ		32.00 - 41.00	14.00	0.03 (kg)	101	**502058**
ⓜ		41.00 - 50.00	14.00	0.04 (kg)	101	**502059**
ⓜ	**501053 / 501061**	50.00 - 59.00	14.00	0.03 (kg)	20*	**502060**
ⓜ		59.00 - 68.00	14.00	0.04 (kg)	20*	**502061**
ⓜ		50.00 - 59.00	14.00	0.03 (kg)	101	**502058**
ⓜ		59.00 - 68.00	14.00	0.04 (kg)	101	**502059**

*Not suitable for indexable inserts with a radius of 0.80 mm

B10-M: 12-13
Key on B10-A: 1
B10-A: 71
B10-H
B10: VI-VII

ⓜ = Metric (mm)
Inserts sold separately

Alu-Line Serrated Slides | Insert Holders

Diameter Range: 68.00 mm - 208.00 mm



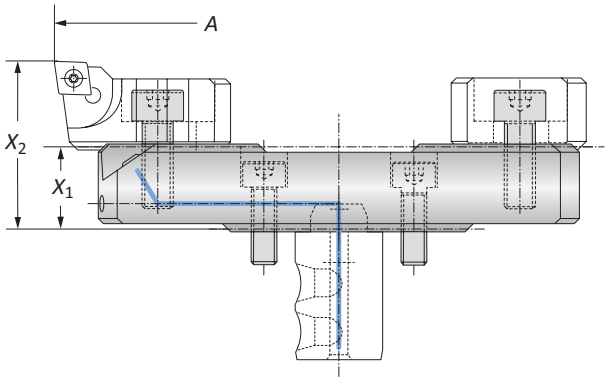

Alu-Line Serrated Slides

	Boring Range *A*	Serrated Slide X_1	Serrated Slide X_2	Weight	Part No.
	68.00 - 96.00	16.00	32.50	0.10 (kg)	**501054**
	96.00 - 124.00	16.00	32.50	0.10 (kg)	**501055**
m	124.00 - 152.00	16.00	32.50	0.20 (kg)	**501056**
	152.00 - 180.00	22.00	38.50	0.25 (kg)	**501058**
	180.00 - 208.00	22.00	38.50	0.30 (kg)	**501059**

Insert Holders

	Boring Range *A*	Weight	Insert Form	Part No.
m	68.00 - 208.00	0.05 (kg)	101	**502064**
	68.00 - 208.00	0.05 (kg)	20	**502069**

NOTE: Other insert holders available upon request

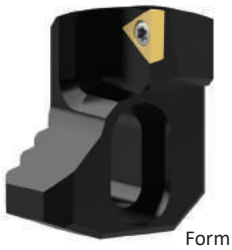

Form 20

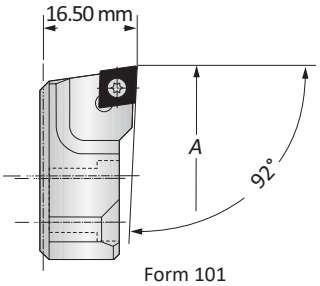

Form 101

Counterweight

	Counterweight X_1	Weight	Part No.
m	13.40	0.05 (kg)	**502165**

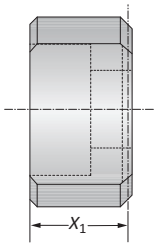

Coolant Delivery System

	Coolant Delivery System Weight	Part No.
m	0.02 (kg)	**501157**

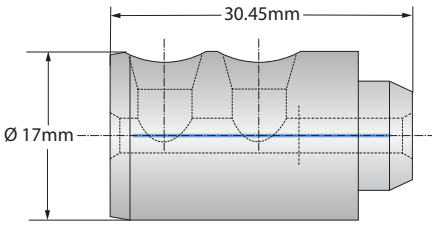

B10-M: 12-13 | B10-A: 71 | B10-H | B10: VI-VII

Key on B10-A: 1

m = Metric (mm)
Inserts sold separately

Outside Turning Insert Holders for Boring Heads

Diameter Range: 4.00 mm - 66.00 mm



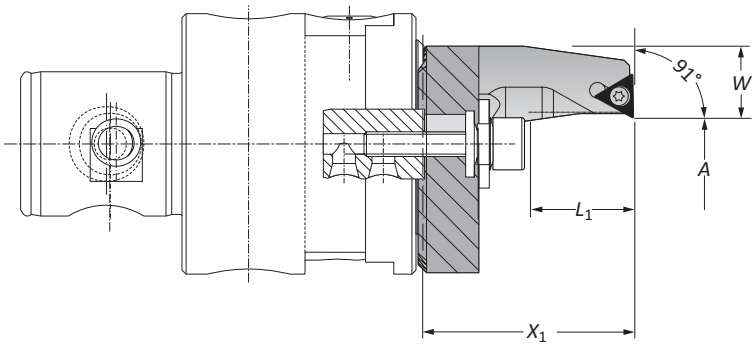

Type A Insert Holders | Diameter Range: 4.00 mm - 30.00 mm

	Boring Range *A*	Insert Holder X_1	Insert Holder L_1	Insert Holder *W*	Weight	Insert Form	Part No.
ⓜ	4.00 - 17.50	40.50	20.00	16.60	0.10 (kg)	20*	**236081**
	16.50 - 30.00	50.50	30.00	11.10	0.10 (kg)	20*	**236082**

NOTE: Clockwise and neutral execution
*Not suitable for indexable inserts with a radius of 0.80 mm



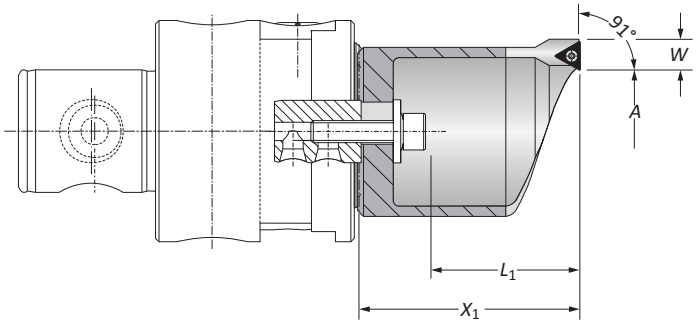

Type B Insert Holders | Diameter Range: 29.00 mm - 66.00 mm

	Boring Range *A*	Insert Holder X_1	Insert Holder L_1	Insert Holder *W*	Weight	Insert Form	Part No.
ⓜ	29.00 - 44.00	75.50	54.00	9.60	0.30 (kg)	20*	**236083**
	43.00 - 66.00	100.50	79.00	9.60	0.40 (kg)	20*	**236084**

NOTE: Clockwise and neutral execution
*Not suitable for indexable inserts with a radius of 0.80 mm

Clamping Pieces for Outside Turning Insert Holders

	Insert Holder Type	Boring Range	Service Key	Complete Part No.
ⓜ	A	4.00 - 30.00	**s5**	**502080**
	B	29.00 - 66.00	**s5**	**502081**

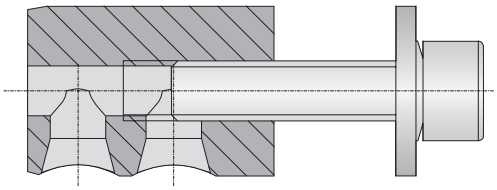

B10-M: 12-13
Key on B10-A: 1
B10-A: 71
B10-H
B10: VI-VII

ⓜ = Metric (mm)
Inserts sold separately

Outside Turning Serrated Slides | Insert Holders

Diameter Range: 2.00 mm - 114.00 mm

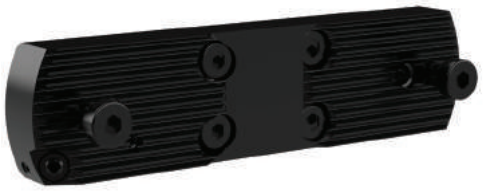

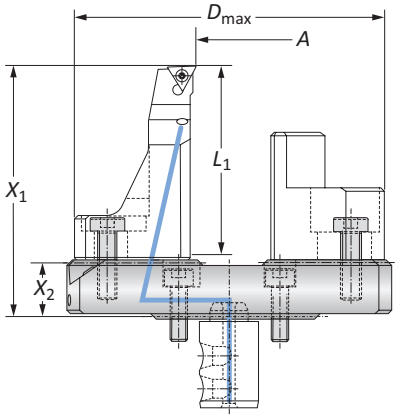

Outside Turning Serrated Slides

	Boring Range	Serrated Slide						
	A	X_1	X_2	L_1	D_{max}	Weight	Part No.
m	2.00 - 30.00	73.00	16.00	55.00	101.00	0.35 (kg)	**501064**
m	30.00 - 58.00	73.00	16.00	55.00	129.00	0.44 (kg)	**501065**
m	58.00 - 86.00	79.00	22.00	55.00	157.00	0.60 (kg)	**501066**
m	86.00 - 114.00	79.00	22.00	55.00	185.00	0.73 (kg)	**501067**

Outside Turning Insert Holder

	Outside Turning Range	Insert Holder			
	A	X_1	Weight	Insert Form	Part No.
m	2.00 - 114.00	57.00	0.15 (kg)	20	**502082**

NOTE: Clockwise and neutral execution



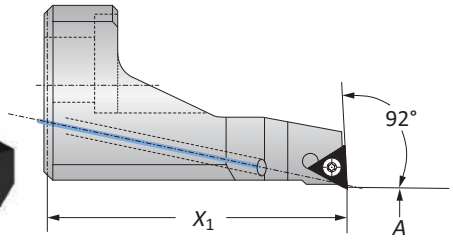

Counterweight

	Counterweight		
	X_1	Weight	Part No.
m	37.75	0.16 (kg)	**502183**

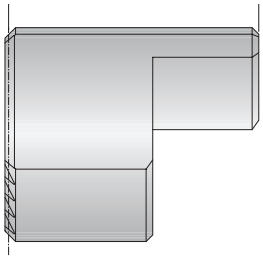

Coolant Delivery System

	Weight	Part No.
m	0.02 (kg)	**501157**

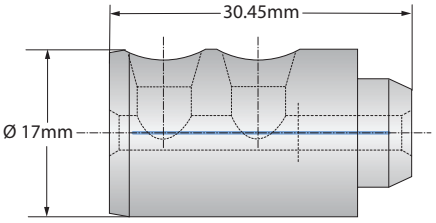

B10-M: 12-13 (Key on B10-A: 1) | B10-A: 71 | B10-H | B10: VI-VII

m = Metric (mm)
Inserts sold separately

Accessories

No.	Part		Size	Part No.
1	Set screw		s3	**415244**
2	Screw for securing insert holder		T25	**415112**
3	Clamping piece		–	**145184**
4	Cap screw for securing insert holders		s4	**027154**
5	Cap screw for securing insert holder/ counterweight		s4	**315248**
6	Set screw - coolant	501054, 501055, 501056	s1.5	**114224**
		501058, 501059	s1.5	**115303**
7	Cap screw for securing serrated slide		s4	**115166**
8	Sealing ring for coolant delivery		–	**415386**

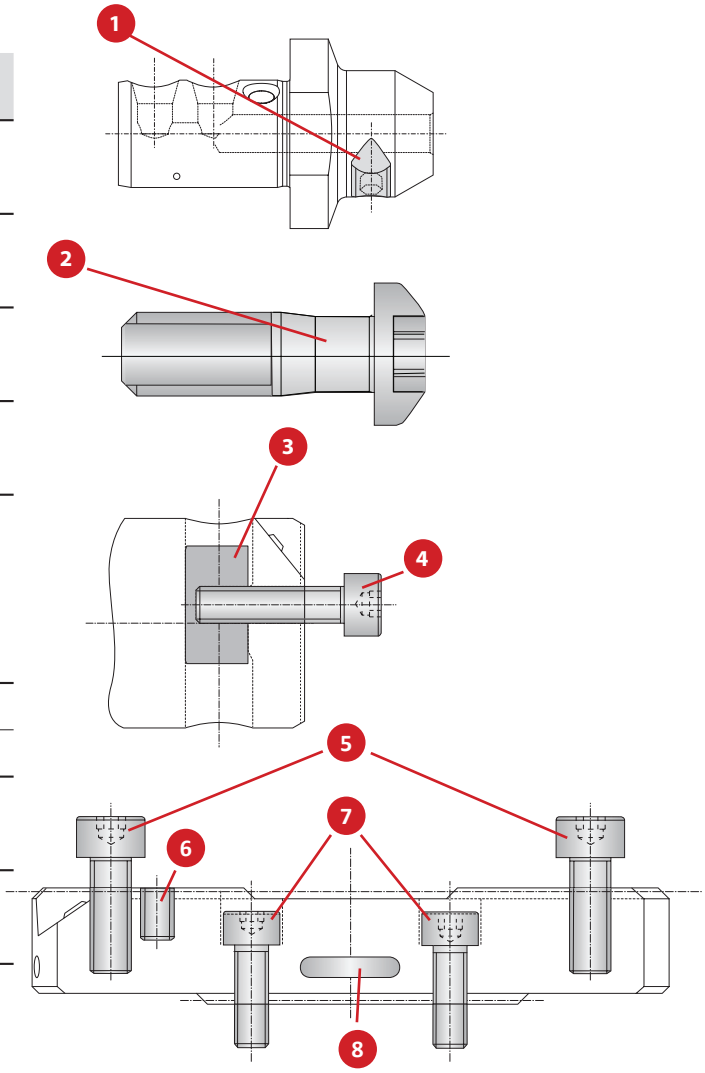

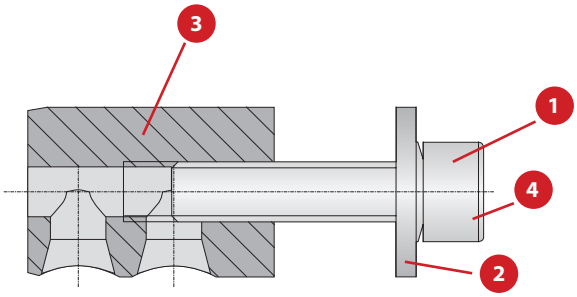

	Boring Range	Type	Hex Size	Clamping Screw Parts 1 Cap Screw	2 Washer	3 Clamping Piece	4 Locking Washer	Complete Part No.
ⓜ	4.00 - 30.00	A	s5	070153	315155	502180	215254	**502080**
	29.00 - 66.00	B	s5	070153	315156	502180	215254	**502081**

Accessories

No.	Part	Insert Form	Size	Part No.
1	Clamping screw	–	–	**415353**
2	Set screw for clamping tool	–	–	**215674**
3	Battery cover	–	–	**415895**
4	Battery*	–	–	**415896**
5	Battery access cover with sealing ring	–	–	**501016**
6	Insert screws	Form 211 Form 20 Form 101	T6 T7 T8	**215377** **115535** **115676**
7	Hex driver	–	s1.5 s3	**215472** **115630**
8	Hex driver	–	s4	**115576**
9	Torx® driver	–	T6 T7 T8 T20	**115537** **115591** **115590** **215150**
10	Torque screwdriver, Torx	(0.6 Nm) Form 211 (0.9 Nm) Form 20 (1.2 Nm) Form 101	T6 T7 T8	**415507** **415508** **415514**

*Always change two batteries
NOTE: Please use VARTA batteries (V392 SR41)

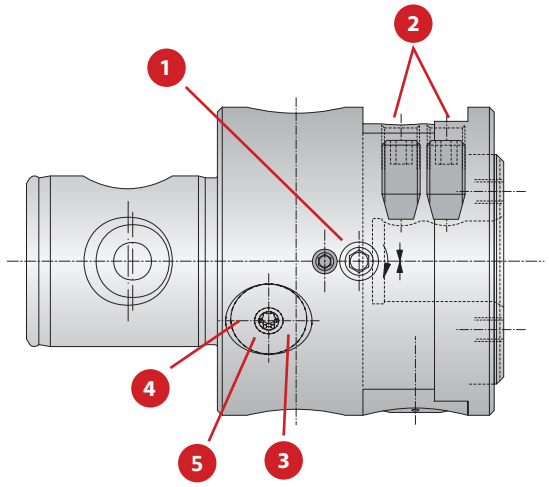

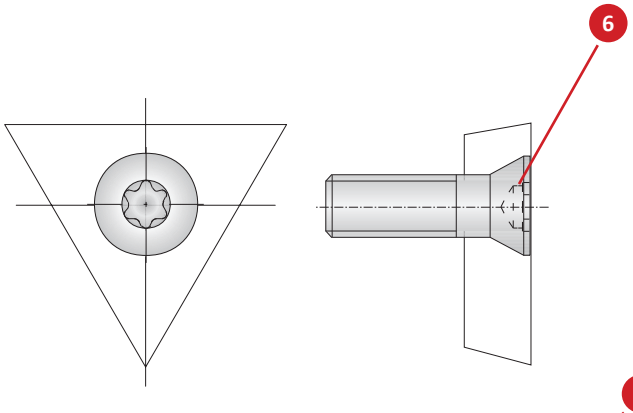

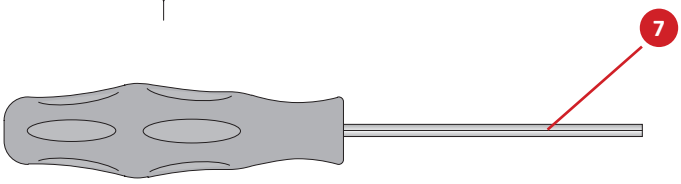

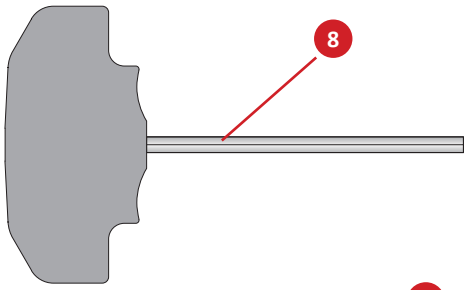

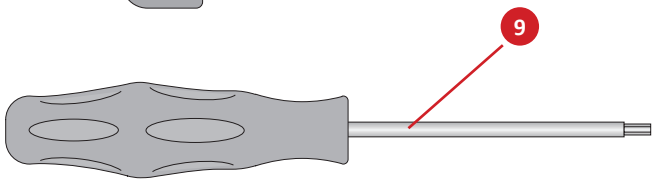

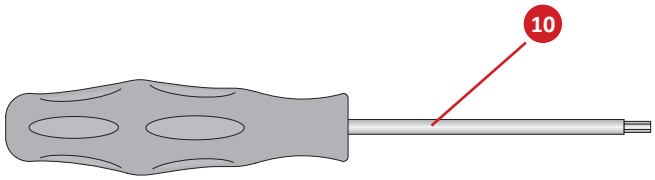

Kit Components

Insert Form 101 | Diameter Range: 10.00 mm - 32.00 mm

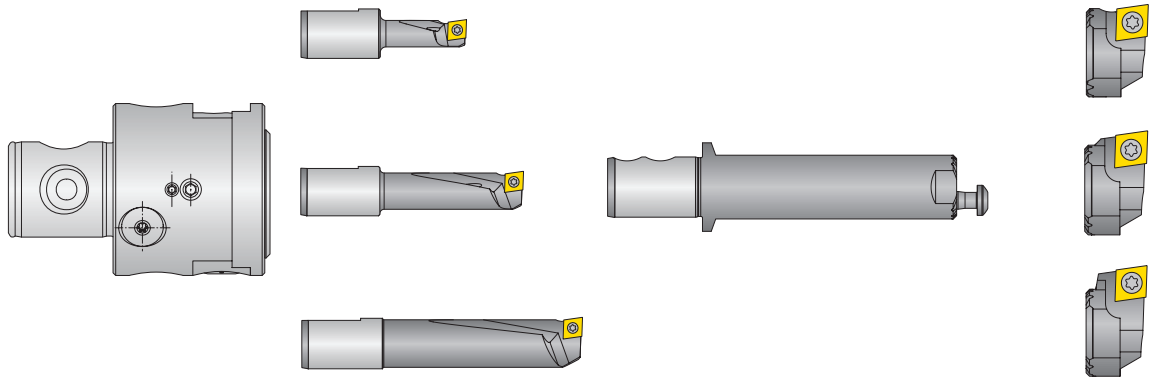

Diameter Range: 10.00 mm - 32.00 mm

	Kit Components							
	Boring Head	Boring Range	Boring Bars	Boring Range	Serrated Tool Body	Insert Holders	Service Keys	Kit No.
Ⓜ	501001	10.00 - 11.00	502012	20.00 - 32.00	502045	502052	115576 (s4)	**103061**
		14.00 - 15.00	502014			502054	415121 (T25)	
		18.00 - 19.00	502016			502056	115590 (T8)	

NOTE: Inserts sold separately



B10-M: 12-13 | B10-H | B10: VI-VII

Key on B10-A: 1

Ⓜ = Metric (mm)
Inserts sold separately

IMPORTANT: Max spindle speed refers to maximum possible speed for an individual boring head and is not a recommended parameter. Refer to page B10-M: 12 for recommended application-specific parameters. Factory technical assistance is available for your specific applications through our Application Engineering department.
email: **engineering.eu@alliedmachine.com**

Kit Components

Insert Form 20 | Diameter Range: 10.00 mm - 32.00 mm

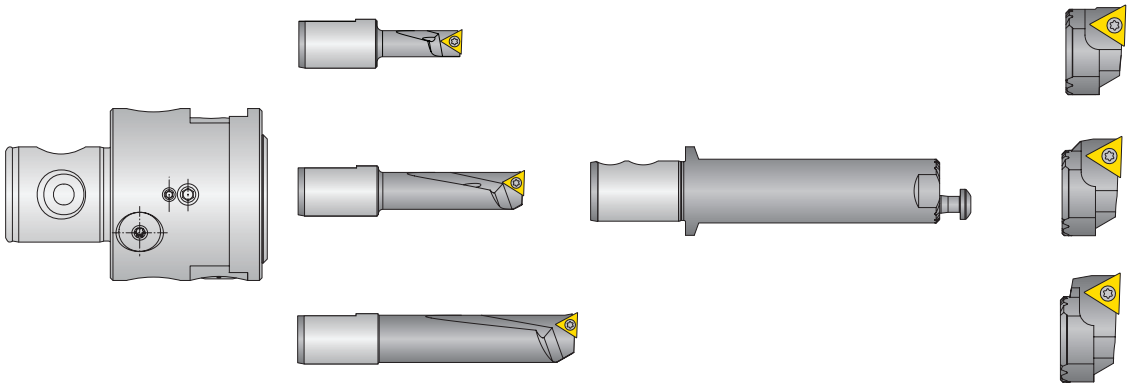

Diameter Range: 10.00 mm - 32.00 mm

	Boring Head	Kit Components						Kit No.
		Boring Range	Boring Bars	Boring Range	Serrated Tool Body	Insert Holders	Service Keys	
ⓜ	501001	10.00 - 11.00	502001	20.00 - 32.00	502045	502046	115576 (s4)	**103062**
		14.00 - 15.00	502003			502048	415121 (T25)	
		18.00 - 19.00	502005			502050	115591 (T7)	

NOTE: Inserts sold separately



B10-M: 12-13

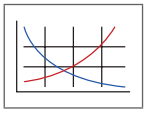

Key on B10-A: 1

B10-H

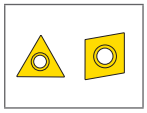

B10: VI-VII

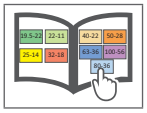

ⓜ = Metric (mm)

Inserts sold separately

IMPORTANT: Max spindle speed refers to maximum possible speed for an individual boring head and is not a recommended parameter. Refer to page B10-M: 12 for recommended application-specific parameters. Factory technical assistance is available for your specific applications through our Application Engineering department.
email: **engineering.eu@alliedmachine.com**

Kit Components

Insert Form 101 | Diameter Range: 32.00 mm - 68.00 mm

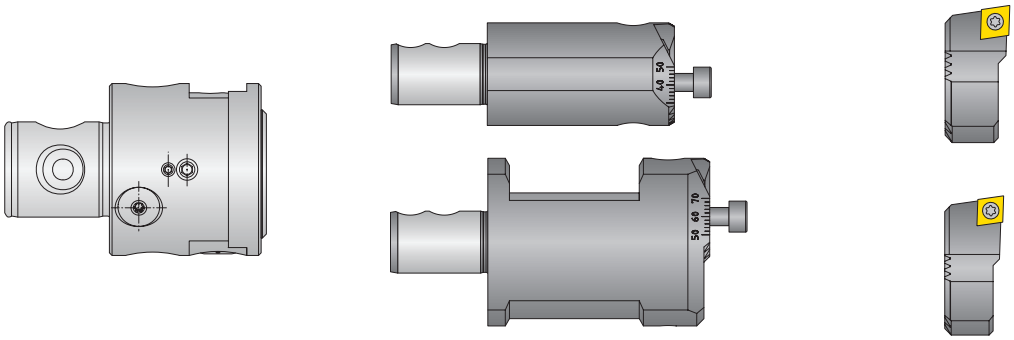

Diameter Range: 32.00 mm - 68.00 mm

	Boring Head	Kit Components: Boring Range	Kit Components: Serrated Tool Body	Kit Components: Insert Holders	Kit Components: Service Keys	Kit No.
ⓜ	501001	32.00 - 50.00 50.00 - 68.00	501052 501053	502058 502059	115576 (s4) 115590 (T8)	**103063**

NOTE: Inserts sold separately



B10-M: 12-13 | B10-H | B10: VI-VII

Key on B10-A: 1

ⓜ = Metric (mm)
Inserts sold separately

IMPORTANT: Max spindle speed refers to maximum possible speed for an individual boring head and is not a recommended parameter. Refer to page B10-M: 12 for recommended application-specific parameters. Factory technical assistance is available for your specific applications through our Application Engineering department.
email: **engineering.eu@alliedmachine.com**

Kit Components

Insert Form 20 | Diameter Range: 32.00 mm - 68.00 mm

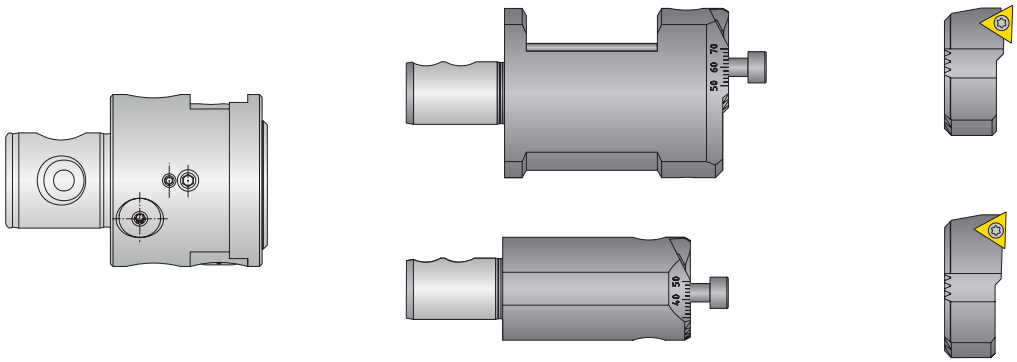

Diameter Range: 32.00 mm - 68.00 mm

	Boring Head	Kit Components: Boring Range	Serrated Tool Body	Insert Holders	Service Keys	Kit No.
Ⓜ	501001	32.00 - 50.00	501052	502060	115576 (s4)	**103064**
		50.00 - 68.00	501053	502061	115591 (T7)	

NOTE: Inserts sold separately



B10-M: 12-13 | B10-H | B10: VI-VII

Key on B10-A: 1

Ⓜ = Metric (mm)

Inserts sold separately

IMPORTANT: Max spindle speed refers to maximum possible speed for an individual boring head and is not a recommended parameter. Refer to page B10-M: 12 for recommended application-specific parameters. Factory technical assistance is available for your specific applications through our Application Engineering department.
email: **engineering.eu@alliedmachine.com**

Kit Components

Insert Form 101 | Diameter Range: 68.00 mm - 152.00 mm

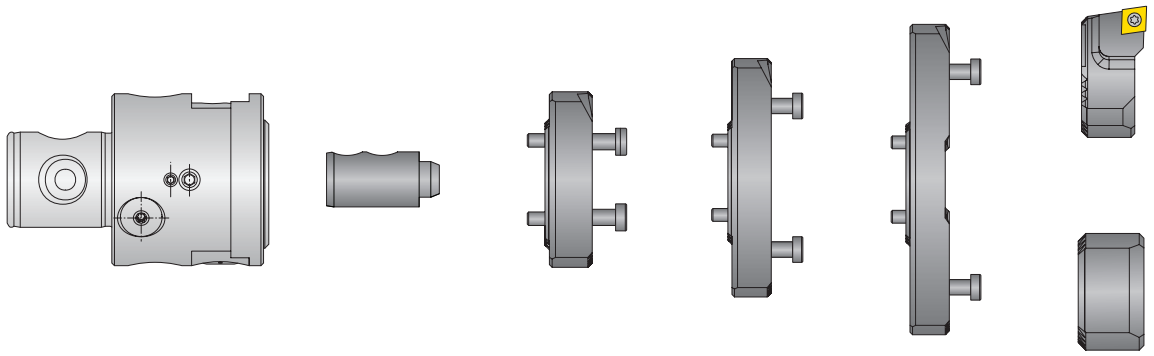

Diameter Range: 68.00 mm - 152.00 mm

	Kit Components						
	Boring Head	Boring Range	Serrated Slides	Insert Holder	Counterweight	Coolant Delivery	Service Keys	Kit No.
Ⓜ	501001	68.00 - 96.00 96.00 - 124.00 124.00 - 152.00	501054 501055 501056	502064	502165	501157	115576 (s4) 115590 (T8)	**103065**

NOTE: Inserts sold separately



B10-M: 12-13 | B10-H | B10: VI-VII

Key on B10-A: 1

Ⓜ = Metric (mm)
Inserts sold separately

IMPORTANT: Max spindle speed refers to maximum possible speed for an individual boring head and is not a recommended parameter. Refer to page B10-M: 12 for recommended application-specific parameters. Factory technical assistance is available for your specific applications through our Application Engineering department.
email: **engineering.eu@alliedmachine.com**

Kit Components

Insert Form 20 | Diameter Range: 68.00 mm - 152.00 mm

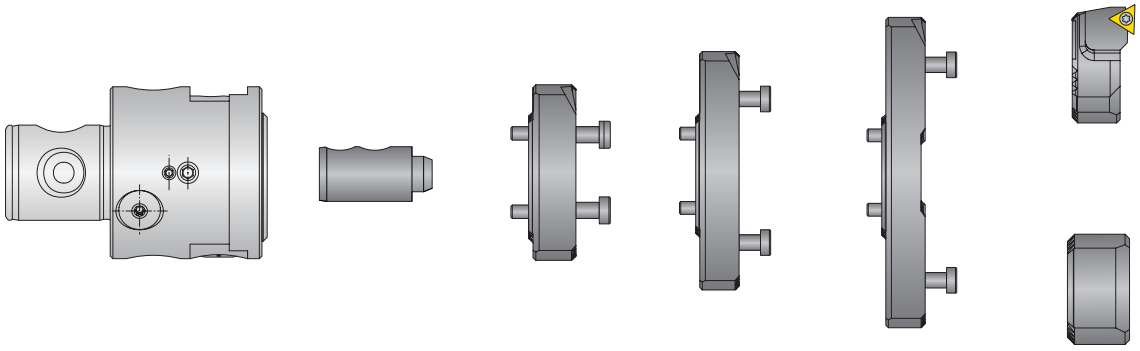

Diameter Range: 68.00 mm - 152.00 mm

	Boring Head	Kit Components						
		Boring Range	Serrated Slides	Insert Holder	Counterweight	Coolant Delivery	Service Keys	Kit No.
ⓜ	501001	68.00 - 96.00 96.00 - 124.00 124.00 - 152.00	501054 501055 501056	502069	502165	501157	115576 (s4) 115591 (T7)	**103066**

NOTE: Inserts sold separately



B10-M: 12-13

Key on B10-A: 1

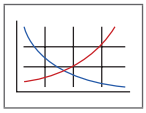

B10-H

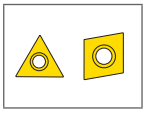

B10: VI-VII

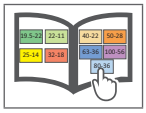

ⓜ = Metric (mm)

Inserts sold separately

IMPORTANT: Max spindle speed refers to maximum possible speed for an individual boring head and is not a recommended parameter. Refer to page B10-M: 12 for recommended application-specific parameters. Factory technical assistance is available for your specific applications through our Application Engineering department.
email: **engineering.eu@alliedmachine.com**

Kit Components

Insert Form 101 | Diameter Range: 96.00 mm - 208.00 mm

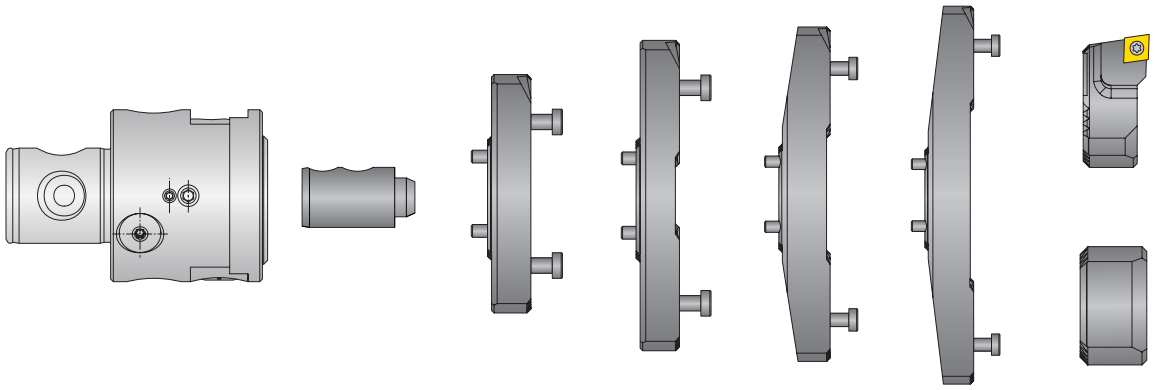

Diameter Range: 96.00 mm - 208.00 mm

	Boring Head	Kit Components: Boring Range	Serrated Slides	Insert Holder	Counterweight	Coolant Delivery	Service Keys	Kit No.
Ⓜ	501001	96.00 - 124.00 124.00 - 152.00 152.00 - 180.00 180.00 - 208.00	501055 501056 501058 501059	502064	502165	501157	115576 (s4) 115590 (T8)	**103081**

NOTE: Inserts sold separately



B10-M: 12-13 | B10-H | B10: VI-VII

Key on B10-A: 1

Ⓜ = Metric (mm)
Inserts sold separately

IMPORTANT: Max spindle speed refers to maximum possible speed for an individual boring head and is not a recommended parameter. Refer to page B10-M: 12 for recommended application-specific parameters. Factory technical assistance is available for your specific applications through our Application Engineering department.
email: **engineering.eu@alliedmachine.com**

Kit Components

Insert Form 20 | Diameter Range: 96.00 mm - 208.00 mm

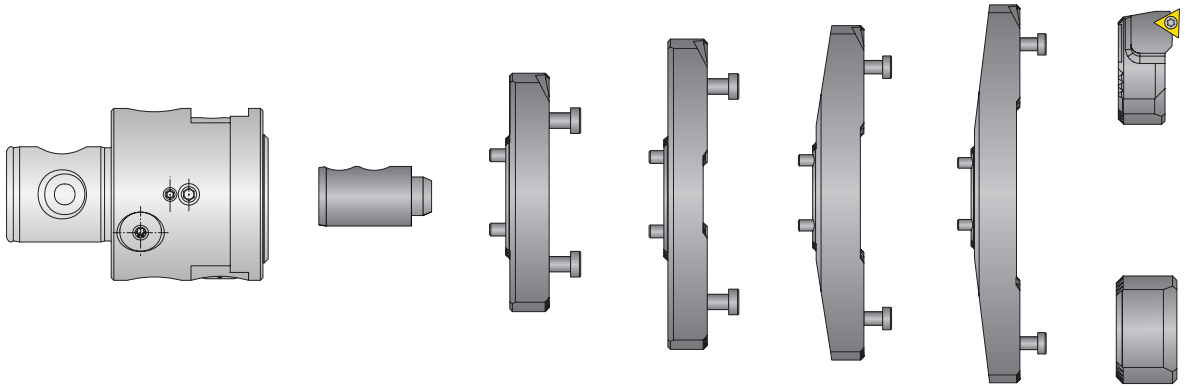

Diameter Range: 96.00 mm - 208.00 mm

	Boring Head	Kit Components: Boring Range	Serrated Slides	Insert Holder	Counterweight	Coolant Delivery	Service Keys	Kit No.
ⓜ	501001	96.00 - 124.00 124.00 - 152.00 152.00 - 180.00 180.00 - 208.00	501055 501056 501058 501059	502069	502165	501157	115576 (s4) 115591 (T7)	**103080**

NOTE: Inserts sold separately



B10-M: 12-13 | B10-H | B10: VI-VII

Key on B10-A: 1

ⓜ = Metric (mm)

Inserts sold separately

IMPORTANT: Max spindle speed refers to maximum possible speed for an individual boring head and is not a recommended parameter. Refer to page B10-M: 12 for recommended application-specific parameters. Factory technical assistance is available for your specific applications through our Application Engineering department.
email: **engineering.eu@alliedmachine.com**

Notes

SECTION

B10-B

Fine Boring

Wohlhaupter® Fine Boring

410 | 464 | 364 | 564 | 310 | 537

Diameter Range: 20.00 mm - 205.00 mm



NOTE: Metric items pictured

NOTE: 3E^{TECH+} adjustment accuracy of 0.001 mm on diameter

NOTE: Digital and vernier adjustment accuracy of 0.002 mm on diameter

Boring has never been more exciting.

Wohlhaupter's fine boring systems are offered in both vernier and easy-to-read digital readout boring heads and cassettes. The lightweight Alu-Line serrated tool bodies reduce weight on the machine spindle.

Unbalanced & Balanced Digital 3E^{TECH+} Boring Heads

- 410 / 464 fine boring heads
- 410 Ø 20.00 mm - 29.00 mm
- 464 Ø 29.00 mm - 205.00 mm

Balanced Analogue Boring Heads

- 364 / 464 fine boring heads
- 364 Ø 20.00 mm - 29.50 mm
- 464 Ø 29.00 mm - 205.00 mm

Balanced Digital Boring Heads

- 564 fine boring heads
- Ø 50.00 mm - 205.00 mm

Unbalanced Analogue Boring Heads

- 310 fine boring heads
- Ø 20.00 mm - 205.00 mm

Analogue and Digital Cassettes

- 537 fine boring cassettes
- Ø 100.00 mm - 205.00 mm

Applicable Industries

Aerospace | Agriculture | Automotive | Firearms | General Machining | Oil & Gas | Renewable Energy

Your safety and the safety of others is very important. This catalogue contains important safety messages. Always read and follow all safety precautions.



This triangle is a safety hazard symbol. It alerts you to potential safety hazards that can cause tool failure and serious injury.

When you see this symbol in the catalogue, look for a related safety message that may be near this triangle or referred to in the nearby text.

There are safety signal words also used in the catalogue. Safety messages follow these words.

⚠ WARNING

WARNING (shown above) means that failure to follow the precautions in this message could result in tool failure and serious injury.

NOTICE means that failure to follow the precautions in this message could result in damage to the tool or machine but not result in personal injury.

NOTE and **IMPORTANT** are also used. These are important that you read and follow but are not safety-related.

Visit www.alliedmachine.com for the most up-to-date information and procedures.

Reference Icons
The following icons will appear throughout the catalogue to help you navigate between products.

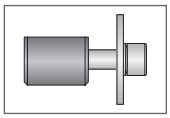

Clamping Elements
For use with insert holders and boring heads

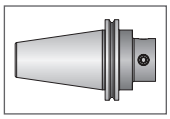

Shanks
A variety of shanks for different machines

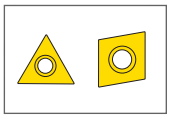

Inserts
For use with insert holder boring heads and boring bars using indexable inserts

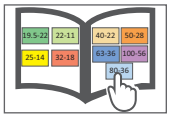

MVS Connection Colour Guide
Detailed instructions and information regarding the MVS connection(s)

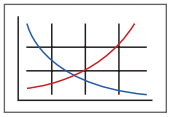

Recommended Cutting Data
Speed and feed recommendations for optimum and safe boring



Through Coolant Option
Indicates that the product is through coolant

Fine Boring Table of Contents

Digital 3E^{TECH+} 410 / 464

Product Overview . . . . . 2 - 3
Unbalanced 410 Boring Heads 4
Balanced 464 Boring Heads . . . . . 5 - 6
Insert Holders 7
Accessories 8

Balanced Analogue 364 / 464

Product Overview . . . . . 10 - 11
Boring Heads . . . . . 12 - 13
Insert Holders 14
Accessories 15

Balanced Digital 564

Product Overview . . . . . 16 - 17
Boring Heads . . . . . 18 - 19
Insert Holders 20
Accessories 21

Unbalanced Analogue 310

Product Overview . . . . . 22 - 23
Boring Heads . . . . . 24 - 25
Serrated Shims | Insert Holders 26
Accessories 27

537 Cassettes

Product Overview . . . . . 28 - 29
Analogue Cassettes 30
3E^{TECH+} Digital Cassettes 31
Serrated Tool Bodies | Insert Holders 32
537 | 3E^{TECH+} Accessories 33

Series	Diameter Range Metric (mm)
410	20.00 - 29.00
464	29.00 - 205.00
364	20.00 - 29.50
564	50.00 - 205.00
310	20.00 - 205.00
537	100.00 - 205.00

410 and 464 Product Overview



Digital 3E^{TECH+} 410 and 464 **FINE BORING**

Make easy diameter adjustments with our 3E^{TECH+} digital readout module.

Wohlhaupter® 410 and 464 digital boring heads are equipped with a 3E^{TECH+} docking port for easy digital adjustments. Boring heads from 29.00 mm offer precision boring with automatic balancing. Our boring heads are specifically engineered to minimise the residual imbalance produced by insert holder displacement. Wohlhaupter Alu-Line boring heads, ranging from 65.00 mm, offer a lightweight aluminium design with a wear-resistant coating that reduces weight on the spindle up to 50%. The insert holder can also be rotated for reverse machining jobs.

- Unbalanced 410 diameter range: 20.00 mm - 29.00 mm
- Balanced 464 diameter range: 29.00 mm - 205.00 mm
- Balanced 464 Alu-Line diameter range: 65.00 mm - 205.00 mm
  - Special coating on Alu-Line for wear-resistant surface
  - Alu-Line body reduces tool weight by 50%, reducing stress on the spindle
- Through coolant
- 3E^{TECH+} and vernier diameter adjustment of 0.002 mm
- Internal balancing improves tool life and surface finish
- Insert holder can be rotated for back boring jobs
- Max cutting speed: 1,700 M/min



Highly accurate adjustments through *vernier* scale

NOTE: 3E^{TECH+} adjustment accuracy of 0.001 mm on diameter

NOTE: Vernier adjustment accuracy of 0.002 mm on diameter

Versatile *3E^{TECH+}* digital readout compatible with other boring tools

IMPORTANT: Max spindle speed refers to maximum possible speed for an individual boring head and is not a recommended parameter. Refer to page B10-M: 12 for recommended application-specific parameters. Factory technical assistance is available for your specific applications through our Application Engineering department.
email: **engineering.eu@alliedmachine.com**

WOHLHAUPTER® 410 and 464 3E^{TECH+} DIGITAL
BORING HEADS

Wohlhaupter 3E^{TECH+}

Improve productivity and quality with the Wohlhaupter 3E^{TECH+} external digital readout module. The 3E^{TECH+} docks onto boring heads and cassettes that offer the 3E^{TECH+} port to make easy diameter adjustments at the machine.

- Make quick and easy micron-accurate diameter adjustments
- Easy-to-read digital display shows exact diameter adjustments
- Designed to be removed from boring tool before operation (if forgotten 3E^{TECH+} will fall off at 500 RPM)
- Adjustments of 0.002 mm on diameter
- Water and dust resistent IP 56
- Coolant and chip resistant
- 3E^{TECH+} will automatically turn off after 30 seconds of not using
- WEEE-Reg.-Nr. DE 15820388

✓ **High-production fine boring**

✓ **Easy diameter adjustment with 3E^{TECH+}**

✓ **Self-balancing 464 boring heads**

410 & 464 BORING HEADS WITH 3E^{TECH+}		
	Diameter Range	**Part No.**
Ⓜ	**20.00 - 24.50**	**410001**
	24.50 - 29.00	**410002**
	29.00 - 38.00	**464003**
	38.00 - 50.00	**464004**
	50.00 - 65.50	**464005**
	65.00 - 83.00	**464006**
	82.00 - 103.00	**464007**
	100.00 - 130.00	**464008**
	125.00 - 167.50	**464009**
	162.50 - 205.00	**464010**



NOTE: 3E^{TECH+} adjustment accuracy of 0.001 mm on diameter

NOTE: Vernier adjustment accuracy of 0.002 mm on diameter

IMPORTANT: Max spindle speed refers to maximum possible speed for an individual boring head and is not a recommended parameter. Refer to page B10-M: 12 for recommended application-specific parameters. Factory technical assistance is available for your specific applications through our Application Engineering department.
email: **engineering.eu@alliedmachine.com**

410 Unbalanced Boring Heads with 3E[TECH+]

Diameter Range: 20.00 mm - 29.00 mm



Form 101

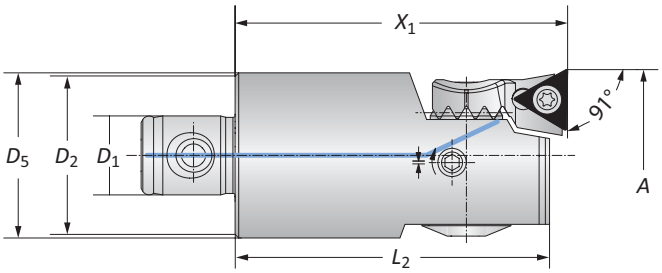

Form 20

410 Unbalanced Boring Heads with 3E[TECH+]

	MVS Connection	Boring Range	Boring Head					Part No.	
	D_2 | D_1	A	X_1	L_2	D_5	Weight	Insert Form	Insert Holder	Boring Head
ⓜ	19 - 11	20.00 - 24.50	46.00	43.00	–	0.09 (kg)	20*	**364077***	**410001**
ⓜ	22 - 11	24.50 - 29.00	46.00	43.50	23.00	0.13 (kg)	20	**210059**	**410002**
	22 - 11	24.50 - 29.00	46.00	43.50	23.00	0.13 (kg)	101	**210069**	**410002**

***Not suitable for indexable inserts with a radius of 0.80 mm**
NOTE: 3E[TECH+] module, charging unit, insert holders, and inserts sold separately

3E[TECH+] Digital Readout Module

Part No.	Charging Unit*
536015	**536016**

NOTE: WEEE-Reg.-Nr. DE 15820388
*Charging unit sold separately



NOTE: 3E[TECH+] adjustment accuracy of 0.001 mm on diameter

B10-M: 12-13 | B10-F | B10: VI-VII

Key on B10-A: 1

ⓜ = Metric (mm)

IMPORTANT: Max spindle speed refers to maximum possible speed for an individual boring head and is not a recommended parameter. Refer to page B10-M: 12 for recommended application-specific parameters. Factory technical assistance is available for your specific applications through our Application Engineering department.
email: **engineering.eu@alliedmachine.com**

464 Balanced Boring Heads with 3E[TECH+]

Diameter Range: 29.00 mm - 65.50 mm



Form 101

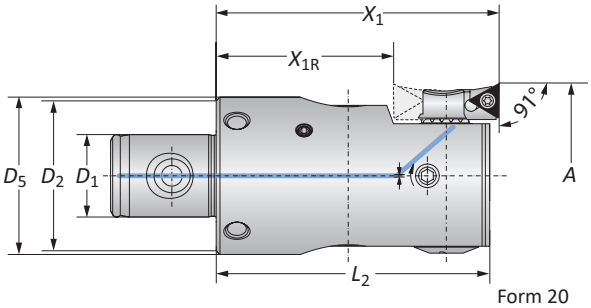

Form 20

464 Balanced Boring Heads with 3E[TECH+]

	MVS Connection	Boring Range	Boring Head						Part No.	
	D_2 | D_1	A	X_1	X_{1R}	L_2	D_5	Weight	Insert Form	Insert Holder	Boring Head
	25 - 14	29.00 - 38.00	56.00	–	53.50	27.00	0.21 (kg)	20	**210059**	**464003**
	25 - 14	29.00 - 38.00	56.00	–	53.50	27.00	0.21 (kg)	101	**210069**	**464003**
Ⓜ	32 - 18	38.00 - 50.00	66.00	38.00	63.50	34.00	0.41 (kg)	20	**264051**	**464004**
	32 - 18	38.00 - 50.00	66.00	38.00	63.50	34.00	0.41 (kg)	101	**264077**	**464004**
	40 - 22	50.00 - 65.50	75.00	47.00	72.50	42.00	0.80 (kg)	20	**210052**	**464005**
	40 - 22	50.00 - 65.50	75.00	47.00	72.50	42.00	0.80 (kg)	101	**210062**	**464005**

NOTE: X_{1R} = rotated insert holder for reverse machining
NOTE: 3E[TECH+] module, charging unit, insert holders, and inserts sold separately

3E[TECH+] Digital Readout Module

Part No.	Charging Unit*
536015	**536016**

NOTE: WEEE-Reg.-Nr. DE 15820388
*Charging unit sold separately



NOTE: 3E[TECH+] adjustment accuracy of 0.001 mm on diameter

B10-M: 12-13 | B10-F | B10: VI-VII

Key on B10-A: 1

Ⓜ = Metric (mm)

IMPORTANT: Max spindle speed refers to maximum possible speed for an individual boring head and is not a recommended parameter. Refer to page B10-M: 12 for recommended application-specific parameters. Factory technical assistance is available for your specific applications through our Application Engineering department.
email: **engineering.eu@alliedmachine.com**

464 Balanced Boring Heads with 3E[TECH+]

Alu-Line | Diameter Range: 65.00 mm - 205.00 mm



Form 101

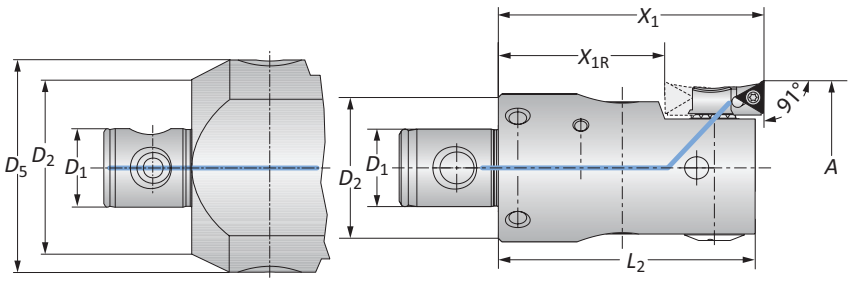

Form 20

464 Balanced Alu-Line Boring Heads with 3E[TECH+]

MVS Connection $D_2 \mid D_1$	Boring Range A	Boring Head X_1	X_{1R}	L_2	D_5	Weight	Insert Form	Part No. Insert Holder	Boring Head
50 - 28	65.00 - 83.00	75.00	39.00	73.00	–	0.60 (kg)	20	**210020**	**464006**
50 - 28	65.00 - 83.00	75.00	39.00	73.00	–	0.60 (kg)	101	**210063**	**464006**
50 - 28	65.00 - 83.00	75.00	39.00	73.00	–	0.60 (kg)	103	**210064**	**464006**
63 - 36	82.00 - 103.00	90.00	54.00	88.00	–	1.00 (kg)	20	**210020**	**464007**
63 - 36	82.00 - 103.00	90.00	54.00	88.00	–	1.00 (kg)	101	**210063**	**464007**
63 - 36	82.00 - 103.00	90.00	54.00	88.00	–	1.00 (kg)	103	**210064**	**464007**
80 - 36	100.00 - 130.00	90.00	54.00	88.00	–	1.50 (kg)	20	**210020**	**464008**
80 - 36	100.00 - 130.00	90.00	54.00	88.00	–	1.50 (kg)	101	**210063**	**464008**
80 - 36	100.00 - 130.00	90.00	54.00	88.00	–	1.50 (kg)	103	**210064**	**464008**
80 - 36	125.00 - 167.50	90.00	54.00	88.00	100.00	1.90 (kg)	20	**210020**	**464009**
80 - 36	125.00 - 167.50	90.00	54.00	88.00	100.00	1.90 (kg)	101	**210063**	**464009**
80 - 36	125.00 - 167.50	90.00	54.00	88.00	100.00	1.90 (kg)	103	**210064**	**464009**
80 - 36	162.50 - 205.00	90.00	54.00	88.00	135.00	2.50 (kg)	20	**210020**	**464010**
80 - 36	162.50 - 205.00	90.00	54.00	88.00	135.00	2.50 (kg)	101	**210063**	**464010**
80 - 36	162.50 - 205.00	90.00	54.00	88.00	135.00	2.50 (kg)	103	**210064**	**464010**

NOTE: X_{1R} = rotated insert holder for reverse machining
NOTE: 3E[TECH+] module, insert holders, and inserts sold separately

3E[TECH+] Digital Readout Module

Part No.	Charging Unit*
536015	**536016**

NOTE: WEEE-Reg.-Nr. DE 15820388
*Charging unit sold separately



NOTE: 3E[TECH+] adjustment accuracy of 0.001 mm on diameter

B10-M: 12-13 | B10-F | B10: VI-VII

Key on B10-A: 1

Ⓜ = Metric (mm)

IMPORTANT: Max spindle speed refers to maximum possible speed for an individual boring head and is not a recommended parameter. Refer to page B10-M: 12 for recommended application-specific parameters. Factory technical assistance is available for your specific applications through our Application Engineering department.
email: **engineering.eu@alliedmachine.com**

Insert Holders for Abrasive Materials

Diameter Range: 65.00 mm - 205.00 mm

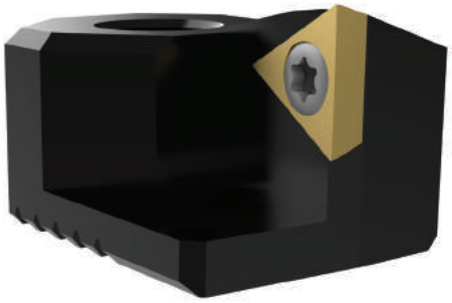

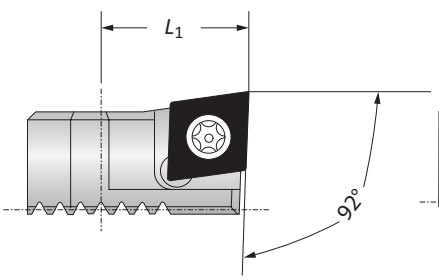

Form 101 / 103

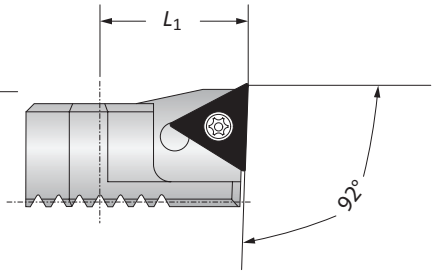

Form 20

	Boring Range	Insert Holder L_1	Weight	Insert Form	Part No.
	65.00 - 205.00	18.00	0.03 (kg)	20	**211061**
ⓜ	65.00 - 205.00	18.00	0.03 (kg)	101	**211063**
	65.00 - 205.00	18.00	0.03 (kg)	103	**211065**

NOTE: Insert holders used for abrasive materials to protect boring head against chip wash
NOTE: When machining grey cast iron, we recommend using insert holders for abrasive materials with CBN inserts for optimised chip removal.

B10-M: 12-13
Key on B10-B: 1
B10-H
B10: VI-VII

ⓜ = Metric (mm)
Inserts sold separately

Accessories

Screws | 3E[TECH+] Accessories

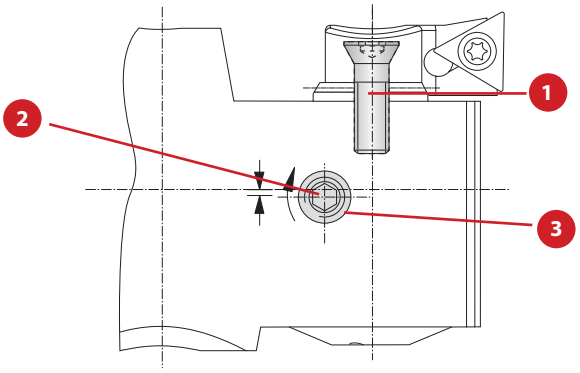

Screws

Boring Head	Part No. 1 Countersunk Screw	Countersunk Screw Service Key	2 Clamping Screw	Clamping Screw Service Key	3 Ball
410001	**215323**	T15 / H	**410151**	S2 / A	364270
410002	**215338**	T15 / H	**410152**	s2 / A	364270
464003	**215338**	T15 / H	**364138**	s2.5 / A	364139
464004	**215338**	T15 / H	**115180**	s2.5 / A	–
464005	**215338**	T15 / H	**115505**	s3 / B	–
464006	**215462**	T20 / H	**315943**	s4 / B	–
464007	**215462**	T20 / H	**515178**	s4 / B	–
464008	**215462**	T20 / H	**515178**	s4 / B	–
464009	**215462**	T20 / H	**515178**	s4 / B	–
464010	**215462**	T20 / H	**515178**	s4 / B	–

3E[TECH+] Accessories

1 Charging Unit Part No.
536016

NOTE: Charging unit sold separately from 3E[TECH+]



NOTE: 3E[TECH+] adjustment accuracy of 0.001 mm on diameter

3E[TECH] Accessories

1 Sealing Ring Part No.	2 Battery CR2032 Part No.
215483	**515491**

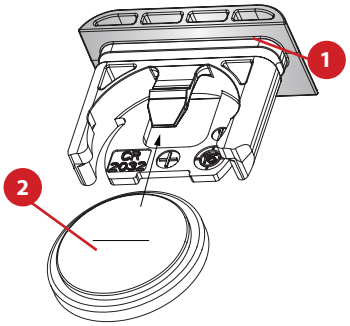

B10-M: 12-13
Key on B10-B: 1
B10: VI-VII

Notes



Balanced Analogue 364 and 464
FINE BORING

Analogue fine boring tools for high-production jobs

Wohlhaupter® 364 and 464 Analogue balanced boring heads offer precision boring with automatic balancing. Our boring heads are specifically engineered to minimise the residual imbalance produced by insert holder displacement. Wohlhaupter Alu-Line boring heads offer a lightweight aluminium design with a wear-resistant coating that reduces weight on the spindle up to 50% yet remains durable in challenging boring applications. The insert holder can also be rotated for reverse machining jobs.

- 364 diameter range: 20.00 mm - 29.50 mm
- 464 diameter range: 29.00 mm - 205.00 mm
- 464 Alu-Line diameter range: 65.00 mm - 205.00 mm
  - Special coating on Alu-Line for wear-resistant surface
  - Alu-Line body reduces tool weight by 50%, reducing stress on the spindle
- Internal balancing improves tool life and surface finish
- Through coolant
- Vernier diameter adjustment of 0.002 mm
- Insert holder can be rotated for back boring jobs
- Max cutting speed: 1,000 M/min



IMPORTANT: Max spindle speed refers to maximum possible speed for an individual boring head and is not a recommended parameter. Refer to page B10-M: 12 for recommended application-specific parameters. Factory technical assistance is available for your specific applications through our Application Engineering department.
email: **engineering.eu@alliedmachine.com**

WOHLHAUPTER® 464 BALANCED ANALOG ***BORING HEADS***

Analogue BORING HEAD PART NUMBER CONVERSION			
	Diameter Range	Old Part No.	*NEW* Part No.
ⓜ	20.00 - 24.50	364030	*No Change*
	24.50 - 29.50	364031	*No Change*
	29.00 - 38.00	364032	464033
	38.00 - 50.00	364033	464034
	50.00 - 65.50	364034	464035
	65.00 - 83.00	364045	464036
	82.00 - 103.00	364046	464037
	100.00 - 130.00	364047	464038
	125.00 - 167.50	364048	464039
	162.50 - 205.00	364049	464040

- ✓ High-production fine boring
- ✓ Easy diameter adjustment
- ✓ Self-balancing
- ✓ Imperial and metric

FEATURES AN ***ENHANCED*** CLAMPING MECHANISM FROM OUR TRUSTED LINE OF 564 DIGITAL FINE BORING HEADS



364 / 464 Analogue Boring Heads

Diameter Range: 20.00 mm - 65.50 mm



364
Form 101

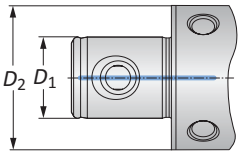

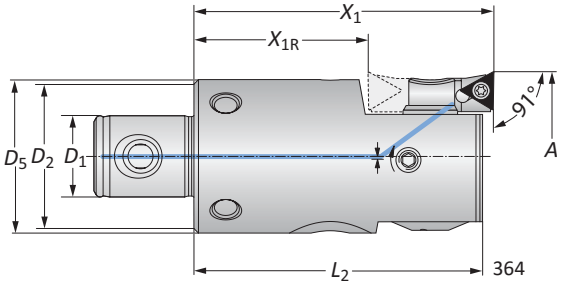

364
Form 20

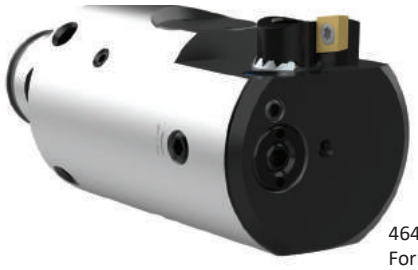

464
Form 101

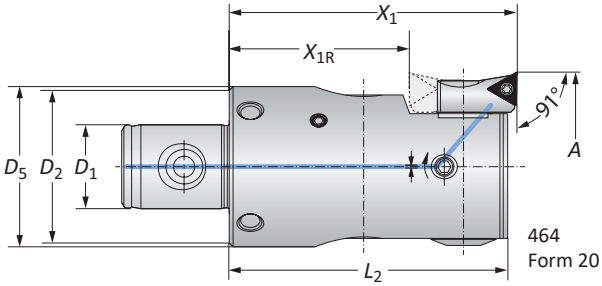

464
Form 20

364/464 Boring Heads

	MVS Connection	Boring Range	Boring Head						Part No.	
	D_2 | D_1	A	X_1	X_{1R}	L_2	D_5	Weight	Insert Form	Insert Holder	Boring Head
	19 - 11	20.00 - 24.50	46.00	–	43.00	–	0.09 (kg)	20*	**364077**	**364030**
	22 - 11	24.50 - 29.50	46.00	–	43.50	23.00	0.15 (kg)	20	**210059**	**364031**
	22 - 11	24.50 - 29.50	46.00	–	43.50	23.00	0.15 (kg)	101	**210069**	**364031**
	25 - 14	29.00 - 38.00	56.00	–	53.50	27.00	0.20 (kg)	20	**210059**	**464033**
ⓜ	25 - 14	29.00 - 38.00	56.00	–	53.50	27.00	0.20 (kg)	101	**210069**	**464033**
	32 - 18	38.00 - 50.00	66.00	38.00	63.50	34.00	0.40 (kg)	20	**264051**	**464034**
	32 - 18	38.00 - 50.00	66.00	38.00	63.50	34.00	0.40 (kg)	101	**264077**	**464034**
	40 - 22	50.00 - 65.50	75.00	47.00	72.50	42.00	0.80 (kg)	20	**210052**	**464035**
	40 - 22	50.00 - 65.50	75.00	47.00	72.50	42.00	0.80 (kg)	101	**210062**	**464035**

*Not suitable for indexable inserts with a radius of 0.80 mm
NOTE: X_{1R} = rotated insert holder for reverse machining
NOTE: Insert holders and inserts sold separately

B10-M: 12-13 | B10-F | B10: VI-VII

Key on B10-A: 1

ⓜ = Metric (mm)

IMPORTANT: Max spindle speed refers to maximum possible speed for an individual boring head and is not a recommended parameter. Refer to page B10-M: 12 for recommended application-specific parameters. Factory technical assistance is available for your specific applications through our Application Engineering department.
email: **engineering.eu@alliedmachine.com**

464 Analogue Boring Heads

Alu-Line | Diameter Range: 65.00 mm - 205.00 mm



Form 101

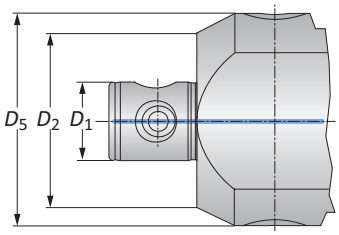

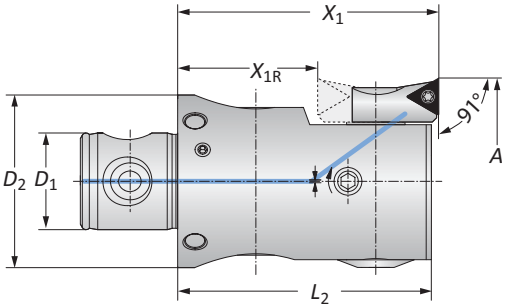

Form 20

464 Alu-Line Boring Heads

	MVS Connection	Boring Range	Boring Head						Part No.	
	D_2 | D_1	A	X_1	X_{1R}	L_2	D_5	Weight	Insert Form	Insert Holder	Boring Head
	50 - 28	65.00 - 83.00	75.00	39.00	72.50	–	0.60 (kg)	20	**210020**	**464036**
	50 - 28	65.00 - 83.00	75.00	39.00	72.50	–	0.60 (kg)	101	**210063**	**464036**
	50 - 28	65.00 - 83.00	75.00	39.00	72.50	–	0.60 (kg)	103	**210064**	**464036**
	63 - 36	82.00 - 103.00	90.00	54.00	87.50	–	1.00 (kg)	20	**210020**	**464037**
	63 - 36	82.00 - 103.00	90.00	54.00	87.50	–	1.00 (kg)	101	**210063**	**464037**
	63 - 36	82.00 - 103.00	90.00	54.00	87.50	–	1.00 (kg)	103	**210064**	**464037**
	80 - 36	100.00 - 130.00	90.00	54.00	87.50	–	1.50 (kg)	20	**210020**	**464038**
Ⓜ	80 - 36	100.00 - 130.00	90.00	54.00	87.50	–	1.50 (kg)	101	**210063**	**464038**
	80 - 36	100.00 - 130.00	90.00	54.00	87.50	–	1.50 (kg)	103	**210064**	**464038**
	80 - 36	125.00 - 167.50	90.00	54.00	87.50	100.00	1.90 (kg)	20	**210020**	**464039**
	80 - 36	125.00 - 167.50	90.00	54.00	87.50	100.00	1.90 (kg)	101	**210063**	**464039**
	80 - 36	125.00 - 167.50	90.00	54.00	87.50	100.00	1.90 (kg)	103	**210064**	**464039**
	80 - 36	162.50 - 205.00	90.00	54.00	87.50	135.00	2.50 (kg)	20	**210020**	**464040**
	80 - 36	162.50 - 205.00	90.00	54.00	87.50	135.00	2.50 (kg)	101	**210063**	**464040**
	80 - 36	162.50 - 205.00	90.00	54.00	87.50	135.00	2.50 (kg)	103	**210064**	**464040**

NOTE: X_{1R} = rotated insert holder for reverse machining
NOTE: Insert holders and inserts sold separately

B10-M: 12-13
Key on B10-A: 1

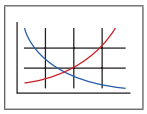

B10-F

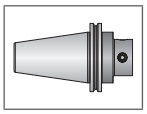

B10: VI-VII

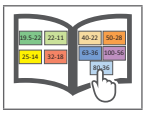

Ⓜ = Metric (mm)

IMPORTANT: Max spindle speed refers to maximum possible speed for an individual boring head and is not a recommended parameter. Refer to page B10-M: 12 for recommended application-specific parameters. Factory technical assistance is available for your specific applications through our Application Engineering department.
email: **engineering.eu@alliedmachine.com**

Insert Holders for Abrasive Materials

Diameter Range: 265.00 mm - 205.00 mm

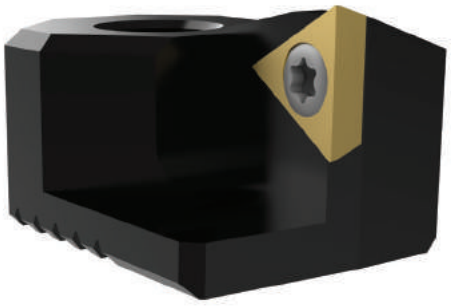

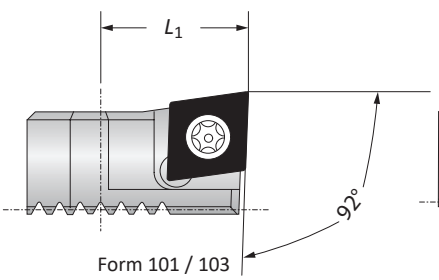

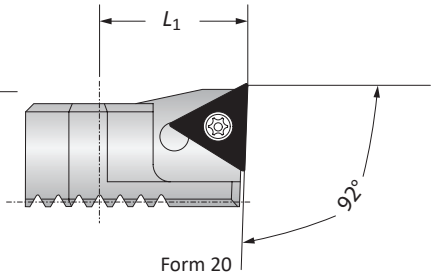

	Boring Range	Insert Holder L_1	Weight	Insert Form	Part No.
	65.00 - 205.00	18.00	0.03 (kg)	20	**211061**
ⓜ	65.00 - 205.00	18.00	0.03 (kg)	101	**211063**
	65.00 - 205.00	18.00	0.03 (kg)	103	**211065**

NOTE: Insert holders used for abrasive materials to protect boring head against chip wash
NOTE: When machining grey cast iron, we recommend using insert holders for abrasive materials with CBN inserts for optimised chip removal.

B10-M: 12-13
Key on B10-B: 1
B10-H
B10: VI-VII

ⓜ = Metric (mm)

Inserts sold separately

www.alliedmachine.com | +44 (0) 1384 400 900 | enquiries.eu@alliedmachine.com

Accessories

Screws

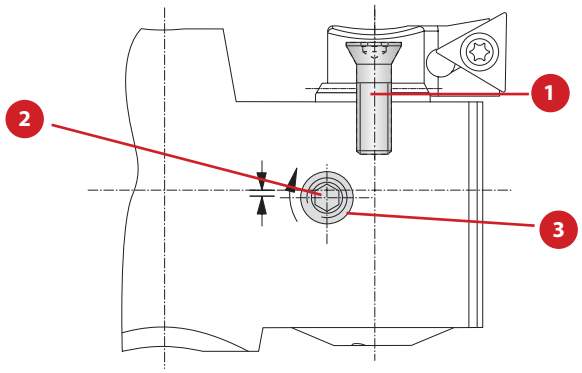

Boring Head	Part No. 1 Countersunk Screw	Countersunk Screw Service Key	2 Clamping Screw	Clamping Screw Service Key	3 Ball
364030	**215323**	T15 / H	**364260**	s2 / A	**364270**
364031	**215338**	T15 / H	**364138**	s2.5 / A	**364139**
464033	**215338**	T15 / H	**364138**	s2.5 / A	**364139**
464034	**215338**	T15 / H	**115180**	s2.5 / A	–
464035	**215338**	T15 / H	**115505**	s3 / B	–
464036	**215462**	T20 / H	**315943**	s4 / B	–
464037	**215462**	T20 / H	**515178**	s4 / B	–
464038	**215462**	T20 / H	**515178**	s4 / B	–
464039	**215462**	T20 / H	**515178**	s4 / B	–
464040	**215462**	T20 / H	**515178**	s4 / B	–

B10-M: 12-13
Key on B10-B: 1
B10: VI-VII

Balanced Digital 564 Product Overview



Balanced Digital *564*
FINE BORING

Adjustable diameter for precise machining.

Wohlhaupter® Balance Digital 564 boring heads feature automatic balancing with an easy-to-read digital display. For diameter ranges above 65.00 mm, 564 boring heads are made of lightweight aluminium. 564 boring heads are specifically engineered to minimise the residual imbalance produced by insert holder displacement. Reverse boring applications can be achieved by rotating the insert holders.

Test the ***engineered lightweight*** boring head today.

- Diameter range: 50.00 mm - 205.00 mm
- Alu-Line diameter range: 65.00 mm - 205.00 mm
  - Special coating on Alu-Line for wear-resistant surface
  - Alu-Line body reduces tool weight by 50%, reducing stress on the spindle
- Digital readout advantage for diameter adjustments of 0.002 mm
- Through coolant
- Internal balancing improves tool life and surface finish
- Insert holder can be rotated for back boring jobs
- Max cutting speed: 2,000 M/min
- Max coolant pressure: 40 bar



Aluminium Boring Head
65.00 mm - 205.00 mm

Steel Boring Head
50.00 mm - 65.50 mm

NOTE: Metric items pictured

NOTE: Digital adjustment accuracy of 0.002 mm on diameter

IMPORTANT: Max spindle speed refers to maximum possible speed for an individual boring head and is not a recommended parameter. Refer to page B10-M: 12 for recommended application-specific parameters. Factory technical assistance is available for your specific applications through our Application Engineering department.
email: **engineering.eu@alliedmachine.com**

WOHLHAUPTER® 564 BORING HEAD
with NOVI^{TECH}®

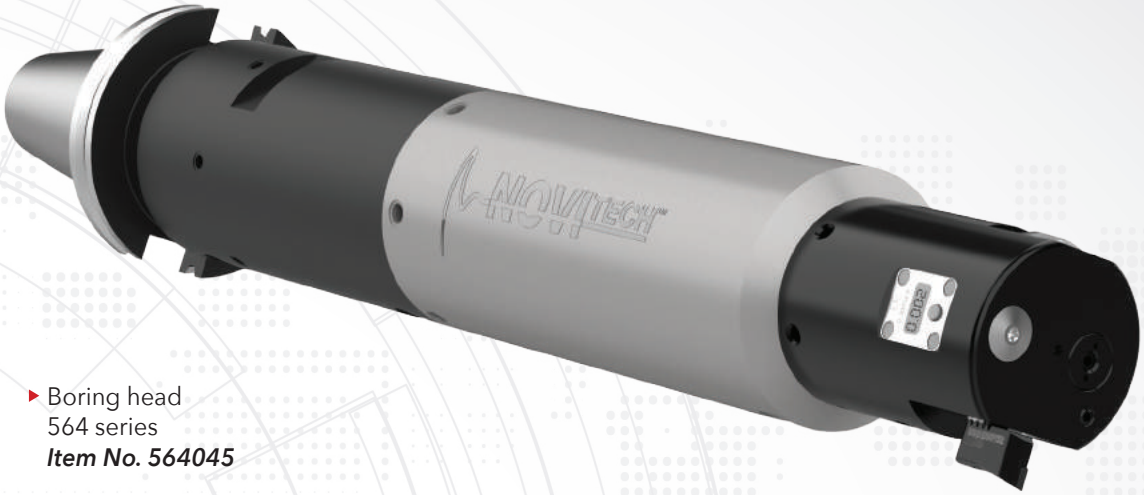

- Boring head
  564 series
  Item No. 564045
- NOVI^{TECH} vibration dampening intermediate module
  Item No. 519005

NOTE: Metric items pictured

NOTE: Digital adjustment accuracy of 0.002 mm on diameter

The Wohlhaupter 564 boring head with the NOVI^{TECH} vibration dampening module provided:

- ✓ **Excellent surface finish**
- ✓ **Eliminated vibration and chatter**

Product:	Wohlhaupter 564 Boring Head with NOVI^{TECH}
Objectives:	0.05 mm concentricity over the length of two bores spaced 355.6 mm apart
Material:	Cast iron
Hole Ø:	79.375 mm
Depth:	7xD

Measure	564 Boring Head with NOVI^{TECH}
RPM	430 RPM
Speed	107.28 M/min
Feed Rate	0.08 mm/rev
Penetration Rate	33 mm/min
Cycle Time (per hole)	3 min 32 sec
Hole Finish	3.8 Ra

Boring Heads

Diameter Range: 50.00 mm - 65.50 mm



NOTE: Metric item pictured
NOTE: Digital adjustment accuracy of 0.002 mm on diameter

Form 101

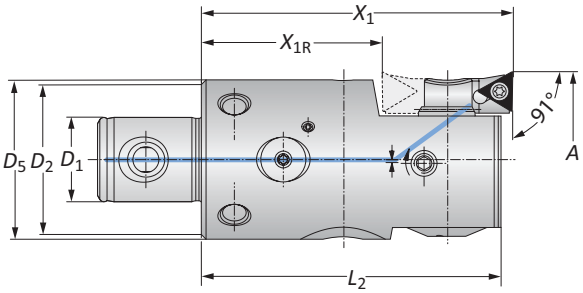

Form 20

564 Digital Boring Heads

	MVS Connection	Boring Range	Boring Head						Part No.	
	D_2 | D_1	A	X_1	X_{1R}	L_2	D_5	Weight	Insert Form	Insert Holder	Boring Head
ⓜ	40 - 22	50.00 - 65.50	75.00	47.00	72.50	42.00	0.80 (kg)	20	**210052**	**564034**
	40 - 22	50.00 - 65.50	75.00	47.00	72.50	42.00	0.80 (kg)	101	**210062**	**564034**

NOTE: X_{1R} = rotated insert holder for reverse machining
NOTE: Insert holders and inserts sold separately

B10-M: 12-13 | B10-F | B10: VI-VII

Key on B10-A: 1

ⓜ = Metric (mm)

IMPORTANT: Max spindle speed refers to maximum possible speed for an individual boring head and is not a recommended parameter. Refer to page B10-M: 12 for recommended application-specific parameters. Factory technical assistance is available for your specific applications through our Application Engineering department.
email: **engineering.eu@alliedmachine.com**

Boring Heads

Alu-Line | Diameter Range: 65.00 mm - 205.00 mm



NOTE: Metric item pictured
NOTE: Digital adjustment accuracy of 0.002 mm on diameter

Form 101

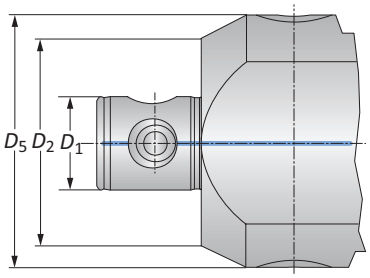

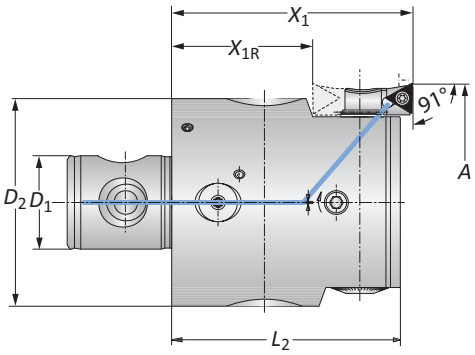

Form 20

564 Digital Alu-Line Boring Heads

	MVS Connection	Boring Range	Boring Head						Part No.	
	D_2 | D_1	A	X_1	X_{1R}	L_2	D_5	Weight	Insert Form	Insert Holder	Boring Head
	50 - 28	65.00 - 83.00	75.00	39.00	73.00	–	0.60 (kg)	20	**210020**	**564045**
	50 - 28	65.00 - 83.00	75.00	39.00	73.00	–	0.60 (kg)	101	**210063**	**564045**
	50 - 28	65.00 - 83.00	75.00	39.00	73.00	–	0.60 (kg)	103	**210064**	**564045**
	63 - 36	82.00 - 103.00	90.00	54.00	88.00	–	1.00 (kg)	20	**210020**	**564046**
	63 - 36	82.00 - 103.00	90.00	54.00	88.00	–	1.00 (kg)	101	**210063**	**564046**
	63 - 36	82.00 - 103.00	90.00	54.00	88.00	–	1.00 (kg)	103	**210064**	**564046**
	80 - 36	100.00 - 130.00	90.00	54.00	88.00	–	1.50 (kg)	20	**210020**	**564047**
Ⓜ	80 - 36	100.00 - 130.00	90.00	54.00	88.00	–	1.50 (kg)	101	**210063**	**564047**
	80 - 36	100.00 - 130.00	90.00	54.00	88.00	–	1.50 (kg)	103	**210064**	**564047**
	80 - 36	125.00 - 167.50	90.00	54.00	88.00	100.00	1.90 (kg)	20	**210020**	**564048**
	80 - 36	125.00 - 167.50	90.00	54.00	88.00	100.00	1.90 (kg)	101	**210063**	**564048**
	80 - 36	125.00 - 167.50	90.00	54.00	88.00	100.00	1.90 (kg)	103	**210064**	**564048**
	80 - 36	162.50 - 205.00	90.00	54.00	88.00	135.00	2.50 (kg)	20	**210020**	**564049**
	80 - 36	162.50 - 205.00	90.00	54.00	88.00	135.00	2.50 (kg)	101	**210063**	**564049**
	80 - 36	162.50 - 205.00	90.00	54.00	88.00	135.00	2.50 (kg)	103	**210064**	**564049**

NOTE: X_{1R} = rotated insert holder for reverse machining
NOTE: Insert holders and inserts sold separately

B10-M: 12-13
Key on B10-A: 1

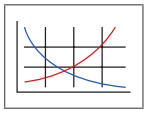

B10-F

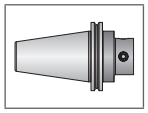

B10: VI-VII

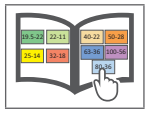

Ⓜ = Metric (mm)

IMPORTANT: Max spindle speed refers to maximum possible speed for an individual boring head and is not a recommended parameter. Refer to page B10-M: 12 for recommended application-specific parameters. Factory technical assistance is available for your specific applications through our Application Engineering department.
email: **engineering.eu@alliedmachine.com**

Insert Holder for Abrasive Materials

Diameter Range: 65.00 mm - 205.00 mm

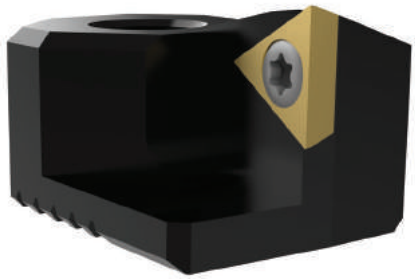

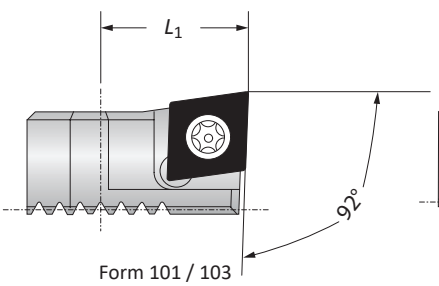

Form 101 / 103

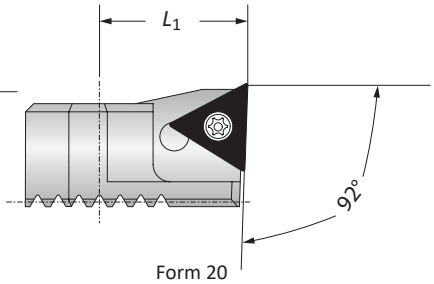

Form 20

	Boring Range	Insert Holder L_1	Weight	Insert Form	Part No.
Ⓜ	65.00 - 205.00	18.00	0.03 (kg)	20	**211061**
Ⓜ	65.00 - 205.00	18.00	0.03 (kg)	101	**211063**
Ⓜ	65.00 - 205.00	18.00	0.03 (kg)	103	**211065**

NOTE: Insert holders used for abrasive materials to protect boring head against chip wash
NOTE: When machining grey cast iron, we recommend using insert holders for abrasive materials with CBN inserts for optimised chip removal.

B10-M: 12-13
Key on B10-B: 1
B10-H
B10: VI-VII

Ⓜ = Metric (mm)
Inserts sold separately

Accessories

Screws | Battery Cover | Batteries

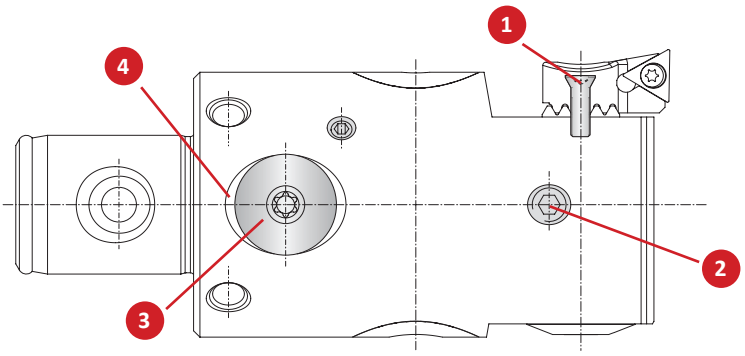

Boring Head	Part No. 1 Countersunk Screw	Service Key	2 Clamping Screw	Service Key	3 Battery Cover	Service Key	4 Sealing Ring	Battery*
564034	**215338**	T15 / H	**115505**	s3 / B	**501016**	T20 / H	**415895**	**415896**
564045	**215462**	T20 / H	**315943**	s4 / B	**501016**	T20 / H	**415895**	**415896**
564046	**215462**	T20 / H	**515178**	s4 / B	**501016**	T20 / H	**415895**	**415896**
564047	**215462**	T20 / H	**515178**	s4 / B	**501016**	T20 / H	**415895**	**415896**
564048	**215462**	T20 / H	**515178**	s4 / B	**501016**	T20 / H	**415895**	**415896**
564049	**215462**	T20 / H	**515178**	s4 / B	**501016**	T20 / H	**415895**	**415896**

*Replace both batteries

B10-M: 12-13

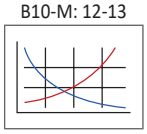

Key on B10-B: 1

B10: VI-VII

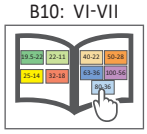

310 Product Overview



310
FINE BORING

Engineered with wear and tear in mind.

310 Wohlhaupter boring heads are made from steel for Ø 20.00 mm - 103.00 mm and coated Alu-Line material for Ø 100.00 mm - 205.00 mm boring heads to protect against corrosion and wear. The insert holder can be rotated quickly for reverse machining.

- Diameter range: 20.00 mm - 205.00 mm
- Alu-Line diameter range: 100.00 mm - 205.00 mm
  - Special coating on Alu-Line provides hard, durable surface
  - Alu-Line body reduces tool weight by 50%, reducing stress on the spindle
- Through coolant
- Vernier diameter adjustment of 0.002 mm
- Max cutting speed: 1,000 M/min



IMPORTANT: Max spindle speed refers to maximum possible speed for an individual boring head and is not a recommended parameter. Refer to page B10-M: 12 for recommended application-specific parameters. Factory technical assistance is available for your specific applications through our Application Engineering department.
email: **engineering.eu@alliedmachine.com**

WOHLHAUPTER® 310 BORING HEAD
with NOVI^{TECH}®

Time is money, so make it count.

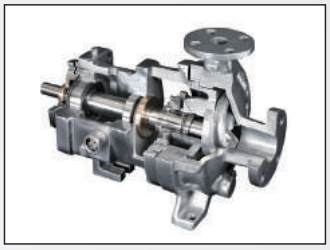

If you want to improve your machining processes, cycle time is a key factor to examine. Our customer was experiencing lengthy cycle times while machining pumps from grey cast iron. The parts required three bored holes, each with a 304.8 mm depth and a 558.8 mm reach.

In order to free up machine time, the customer questioned if their process could be more efficient. The main objectives were to decrease the current cycle time and to maintain a 4 Ra finish, which was required to perform the burnishing process that followed.

The previous tooling ran at a slow 11.938 mm/min and a slow 84-minute cycle time to bore the three holes on each part. With our **Wohlhaupter 310 boring head** utilising the **NOVI^{TECH} vibration dampening module**, the customer increased to a more efficient 95.25 mm/min and slashed the cycle time to 10.5 minutes (*an 87% decrease*). Along with the increased speed, the Wohlhaupter tooling also achieved a 4 Ra finish, accomplishing everything the customer needed.

The Wohlhaupter solution reduced the process cycle time by 74 minutes. Improvements in speed and cycle time can free up machine hours, which means more throughput and higher profit for your company. ***Are you losing money on applications with substantially long cycle times?***

Product:	Wohlhaupter 310 Boring Head with NOVI^{TECH}
Objectives:	(1) Decrease cycle time (2) Maintain 4 Ra hole finish
Industry:	Oil & gas/petrochemical
Part:	Pump
Material:	Grey cast iron
Hole Ø:	139.7 mm
Hole Depth:	304.8 mm

Measure	Competitor Boring Head	310 Boring Head w/ NOVI^{TECH}
RPM	39	469
Speed Rate	17.069 M/min	205.74 M/min
Feed Rate	0.305 mm/rev	0.203 mm/rev
Penetration Rate	11.938 mm/min	92.25 mm/min
Cycle Time (per hole)	27 min 54 sec	3 min 32 sec
Hole Finish	4 Ra	3.8 Ra

- Boring head 310 series
  Item No. 310008
- NOVI^{TECH} vibration dampening intermediate module
  Item No. 519005



74 minute cycle time reduction

© Allied Machine & Engineering CS4001

The Wohlhaupter 310 boring head with the NOVI^{TECH} vibration dampening module provided:

- ✓ Increased penetration rate
- ✓ Decreased cycle time
- ✓ Excellent finish in deep hole application

Boring Heads

Diameter Range: 20.00 mm - 103.00 mm



Form 101 / 103

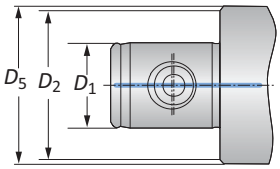

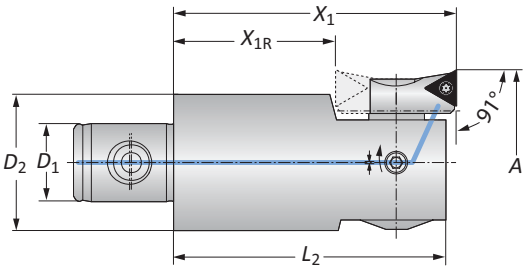

Form 20

310 Boring Heads

MVS Connection	Boring Range	Boring Head						Part No.	
D_2 | D_1	A	X_1	X_{1R}	L_2	D_5	Weight	Insert Form	Insert Holder	Boring Head
19 - 11	20.00 - 24.50	46.00	–	43.00	–	0.10 (kg)	20*	**364077**	**310010**
22 - 11	24.50 - 29.50	46.00	–	43.50	23.00	0.15 (kg)	20	**210059**	**310020**
22 - 11	24.50 - 29.50	46.00	–	43.50	23.00	0.15 (kg)	101	**210069**	**310020**
25 - 14	29.00 - 37.00	56.00	–	53.50	26.00	0.20 (kg)	20	**210059**	**310001**
25 - 14	29.00 - 37.00	56.00	–	53.50	26.00	0.20 (kg)	101	**210069**	**310001**
25 - 14	36.00 - 44.00	56.00	28.00	53.50	26.00	0.20 (kg)	20	**210052**	**310001**
25 - 14	36.00 - 44.00	56.00	28.00	53.50	26.00	0.20 (kg)	101	**210062**	**310001**
32 - 18	43.00 - 54.00	66.00	38.00	63.50	–	0.40 (kg)	20	**210052**	**310003**
32 - 18	43.00 - 54.00	66.00	38.00	63.50	–	0.40 (kg)	101	**210062**	**310003**
40 - 22	53.00 - 66.00	75.00	39.00	72.50	–	0.70 (kg)	20	**210020**	**310004**
40 - 22	53.00 - 66.00	75.00	39.00	72.50	–	0.70 (kg)	101	**210063**	**310004**
40 - 22	53.00 - 66.00	75.00	39.00	72.50	–	0.70 (kg)	103	**210064**	**310004**
50 - 28	65.00 - 83.00	75.00	39.00	72.50	–	1.20 (kg)	20	**210020**	**310005**
50 - 28	65.00 - 83.00	75.00	39.00	72.50	–	1.20 (kg)	101	**210063**	**310005**
50 - 28	65.00 - 83.00	75.00	39.00	72.50	–	1.20 (kg)	103	**210064**	**310005**
63 - 36	82.00 - 103.00	90.00	54.00	87.50	–	2.20 (kg)	20	**210020**	**310006**
63 - 36	82.00 - 103.00	90.00	54.00	87.50	–	2.20 (kg)	101	**210063**	**310006**
63 - 36	82.00 - 103.00	90.00	54.00	87.50	–	2.20 (kg)	103	**210064**	**310006**

*Not suitable for indexable inserts with a radius of 0.80 mm

NOTE: X_{1R} = rotated insert holder for reverse machining

NOTE: Insert holders and inserts sold separately

B10-M: 12-13
Key on B10-A: 1

B10-F

B10: VI-VII

Ⓜ = Metric (mm)

IMPORTANT: Max spindle speed refers to maximum possible speed for an individual boring head and is not a recommended parameter. Refer to page B10-M: 12 for recommended application-specific parameters. Factory technical assistance is available for your specific applications through our Application Engineering department.
email: **engineering.eu@alliedmachine.com**

Boring Heads

Alu-Line | Diameter Range: 100.00 mm - 205.00 mm



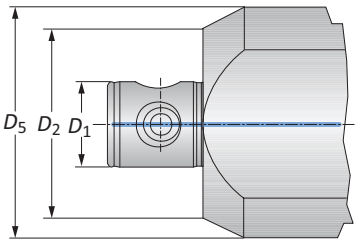

Form 101 / 103

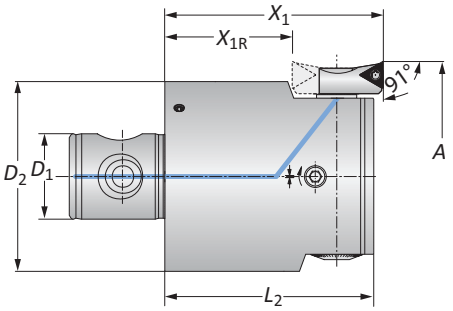

Form 20

Alu-Line 310 Boring Heads

MVS Connection	Boring Range	Boring Head						Part No.	
D_2 | D_1	A	X_1	X_{1R}	L_2	D_5	Weight	Insert Form	Insert Holder	Boring Head
80 - 36	100.00 - 130.00	90.00	54.00	87.50	–	1.40 (kg)	20	**210020**	**310007**
80 - 36	100.00 - 130.00	90.00	54.00	87.50	–	1.40 (kg)	101	**210063**	**310007**
80 - 36	100.00 - 130.00	90.00	54.00	87.50	–	1.40 (kg)	103	**210064**	**310007**
80 - 36	125.00 - 167.50	90.00	54.00	87.50	100.00	1.80 (kg)	20	**210020**	**310008**
80 - 36	125.00 - 167.50	90.00	54.00	87.50	100.00	1.80 (kg)	101	**210063**	**310008**
80 - 36	125.00 - 167.50	90.00	54.00	87.50	100.00	1.80 (kg)	103	**210064**	**310008**
80 - 36	162.50 - 205.00	90.00	54.00	87.50	135.00	2.40 (kg)	20	**210020**	**310009**
80 - 36	162.50 - 205.00	90.00	54.00	87.50	135.00	2.40 (kg)	101	**210063**	**310009**
80 - 36	162.50 - 205.00	90.00	54.00	87.50	135.00	2.40 (kg)	103	**210064**	**310009**

NOTE: X_{1R} = rotated insert holder for reverse machining
NOTE: Insert holders and inserts sold separately

B10-M: 12-13 | B10-F | B10: VI-VII

Key on B10-A: 1

Ⓜ = Metric (mm)

IMPORTANT: Max spindle speed refers to maximum possible speed for an individual boring head and is not a recommended parameter. Refer to page B10-M: 12 for recommended application-specific parameters. Factory technical assistance is available for your specific applications through our Application Engineering department.
email: **engineering.eu@alliedmachine.com**

Insert Holders for Abrasive Materials | Serrated Shims

Diameter Range: 53.00 mm - 205.00 mm

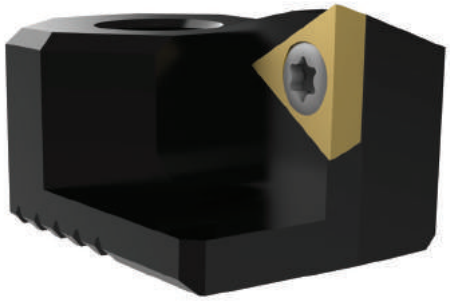

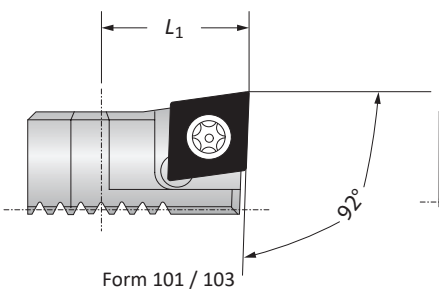

Form 101 / 103

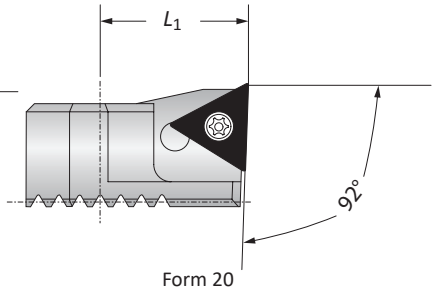

Form 20

Insert Holders

	Boring Range	Insert Holder L_1	Weight	Insert Form	Part No.
	53.00 - 205.00	18.00	0.03 (kg)	20	**211061**
m	53.00 - 205.00	18.00	0.03 (kg)	101	**211063**
	53.00 - 205.00	18.00	0.03 (kg)	103	**211065**

NOTE: Insert holders used for abrasive materials to protect boring head against chip wash
NOTE: When machining grey cast iron, we recommend using insert holders for abrasive materials with CBN inserts for optimised chip removal.

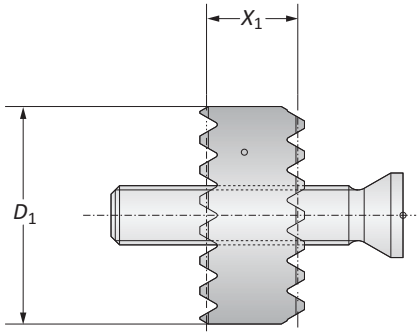

Serrated Shims

	Boring Range	Additional Boring Range	Serrated Shim X_1	Serrated Shim D_1	Weight	Part No. Serrated Shim & Screw	Part No. Replacement Screw
	29.00 - 54.00	8.00	4.00	12.00	0.01 (kg)	**310070**	**415360**
m	29.00 - 54.00	12.00	6.00	12.00	0.01 (kg)	**310071**	**415342**
	53.00 - 205.00	10.00	5.00	18.00	0.01 (kg)	**310074**	**515595**
	53.00 - 205.00	15.00	7.50	18.00	0.01 (kg)	**310075**	**515596**

B10-M: 12-13 | B10-H | B10: VI-VII

Key on B10-B: 1

m = Metric (mm)
Inserts sold separately

www.alliedmachine.com | +44 (0) 1384 400 900 | enquiries.eu@alliedmachine.com

Accessories

Screws

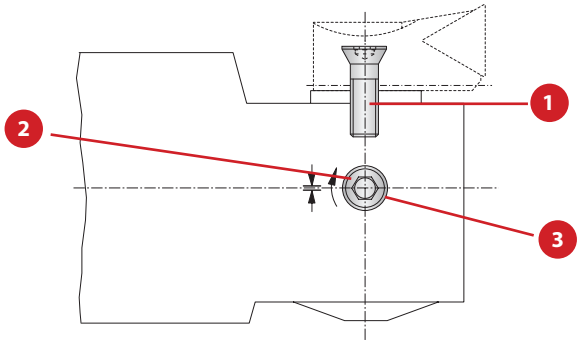

Boring Head	1 Countersunk Screw		2 Clamping Screw		3 Ball
	Part No.	Service Key	Part No.	Service Key	Part No.
310010	**215323**	T15 / H	**364260**	s2.0 / A	**364270**
310020	**215338**	T15 / H	**364138**	s2.5 / A	**364139**
310001	**215338**	T15 / H	**115136**	s2.5 / A	–
310003	**215338**	T15 / H	**115180**	s2.5 / A	–
310004	**215462**	T20 / H	**115249**	s4 / B	–
310005	**215462**	T20 / H	**115185**	s4 / B	–
310006	**215462**	T20 / H	**315279**	s4 / B	–
310007	**215462**	T20 / H	**115186**	s4 / B	–
310008	**215462**	T20 / H	**115186**	s4 / B	–
310009	**215462**	T20 / H	**115186**	s4 / B	–

B10-M: 12-13

Key on B10-B: 1

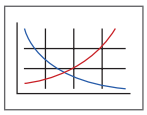

B10: VI-VII

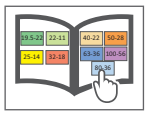

537 Product Overview



537 Cassettes
FINE BORING

Engineered for easy precision.

537 fine boring cassettes offer high accuracy and are available in an easy-to-use digital or Analogue version. The digital version features a docking port to attach the 3E^{TECH+} digital readout module for µ-accurate diameter adjustments while the Analogue cassettes provide highly accurate adjustments through the vernier scale. 537 cassettes are made of hardened steel and can be used on serrated tool bodies and slides from 100.00 mm - 3255.00 mm. The insert holder can be rotated easily for reverse machining applications.

Experience ***digital precision boring*** for yourself.

- Diameter range: 100.00 mm - 205.00 mm
- Cassette can be used on large diameter serrated slides **(pg. B10-G: 8):** 200.00 mm - 3255.00 mm
- Through coolant
- 3E^{TECH+} module provides a simple digital readout
- Analogue version with a vernier scale
- Max cutting speed: 900 M/min



NOTE: 3E^{TECH+} adjustment accuracy of 0.001 mm on diameter

NOTE: Vernier adjustment accuracy of 0.002 mm on diameter

IMPORTANT: Max spindle speed refers to maximum possible speed for an individual boring head and is not a recommended parameter. Refer to page B10-M: 12 for recommended application-specific parameters. Factory technical assistance is available for your specific applications through our Application Engineering department.
email: **engineering.eu@alliedmachine.com**

537 BORING CASSETTES

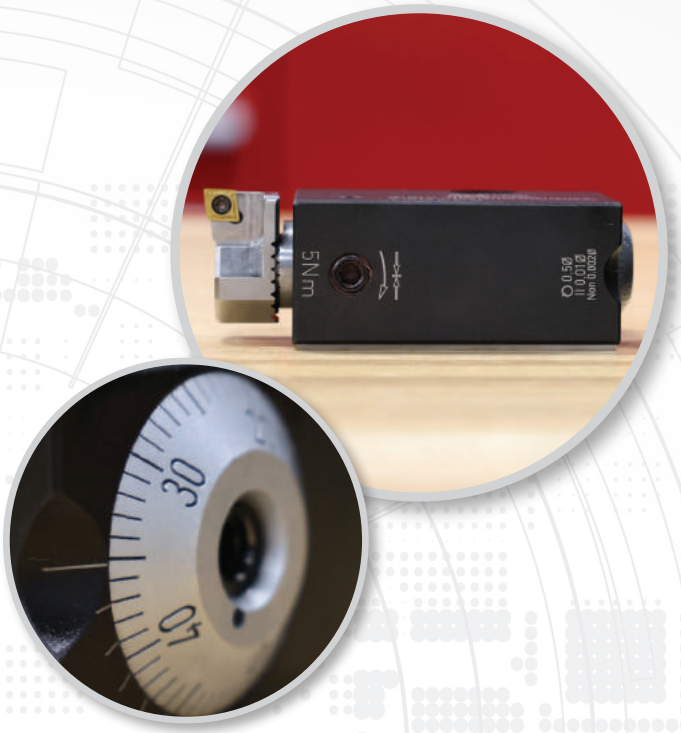

NEW vernier scale on both Analogue and digital cassettes



NEW digital 537 cassettes with 3E^{TECH} docking port

- Convenient tool handling
- Large range of applications
- Hardened steel bodies

537 Analogue Cassettes

Diameter Range: 100.00 mm - 205.00 mm



Form 101 / 103

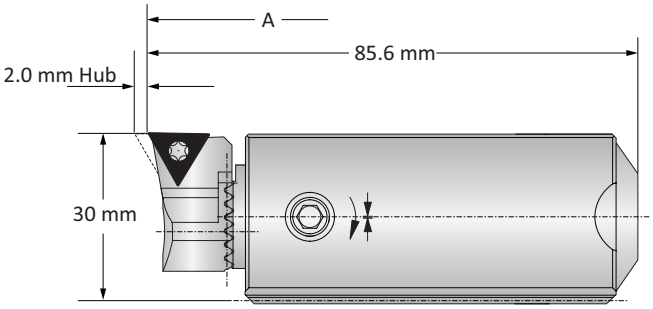

Form 20

Analogue 537 Cassettes

	Boring Range	Weight	Insert Form	Part No. Insert Holder	Clamping Piece	Cassette*
	100.00 - 205.00	0.60 (kg)	20	**210020**	**137026**	**537051**
ⓜ	100.00 - 205.00	0.60 (kg)	101	**210063**	**137026**	**537051**
	100.00 - 205.00	0.60 (kg)	103	**210064**	**137026**	**537051**

*Required serrated tool body sold separately

NOTE: Cassette and insert holder can be used on large diameter serrated slides (B10-G: 8)

NOTE: Insert holders, inserts, and clamping pieces ***sold separately***

B10-M: 12-13 | B10-F | B10: VI-VII

Key on B10-A: 1

ⓜ = Metric (mm)

IMPORTANT: Max spindle speed refers to maximum possible speed for an individual boring head and is not a recommended parameter. Refer to page B10-M: 12 for recommended application-specific parameters. Factory technical assistance is available for your specific applications through our Application Engineering department.
email: **engineering.eu@alliedmachine.com**

537 Cassettes with 3E^{TECH+}

Diameter Range: 100.00 mm - 205.00 mm



Form 101 / 103

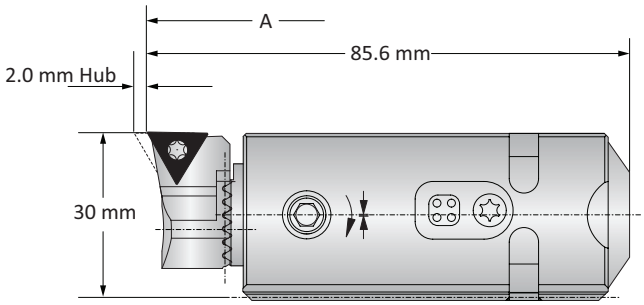

Form 20

Digital 537 Cassettes

	Boring Range	Weight	Insert Form	Part No. Insert Holder	Clamping Piece	Cassette*
	100.00 - 205.00	0.60 (kg)	20	**210020**	**137026**	**537052**
ⓜ	100.00 - 205.00	0.60 (kg)	101	**210063**	**137026**	**537052**
	100.00 - 205.00	0.60 (kg)	103	**210064**	**137026**	**537052**

*Required serrated tool body sold separately

NOTE: Cassette and insert holder can be used on large diameter serrated slides (B10-G: 8)

NOTE: 3E^{TECH+} digital readout module, charging unit, insert holders, inserts, and clamping pieces ***sold separately***

3E^{TECH+} Digital Readout Module

Part No.	Charging Unit*
536015	**536016**

NOTE: WEEE-Reg.-Nr. DE 15820388

*Charging unit sold separately



NOTE: 3E^{TECH+} adjustment accuracy of 0.001 mm on diameter

B10-M: 12-13 B10-F B10: VI-VII

Key on B10-A: 1

ⓜ = Metric (mm)

IMPORTANT: Max spindle speed refers to maximum possible speed for an individual boring head and is not a recommended parameter. Refer to page B10-M: 12 for recommended application-specific parameters. Factory technical assistance is available for your specific applications through our Application Engineering department.
email: **engineering.eu@alliedmachine.com**

Serrated Tool Bodies | Insert Holders for Abrasive Materials

Diameter Range: 100.00 mm - 205.00 mm



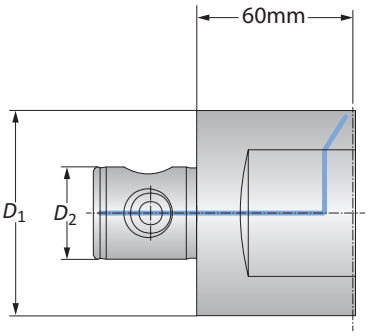

Serrated Tool Bodies

	MVS Connection D_2 | D_1	Serrated Tool Body Boring Range	Part No.
m	80 - 36	100.00 - 155.00	**148007**
	80 - 36	150.00 - 205.00	**148009**

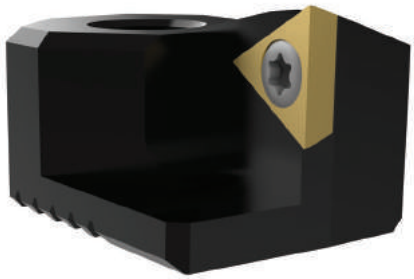

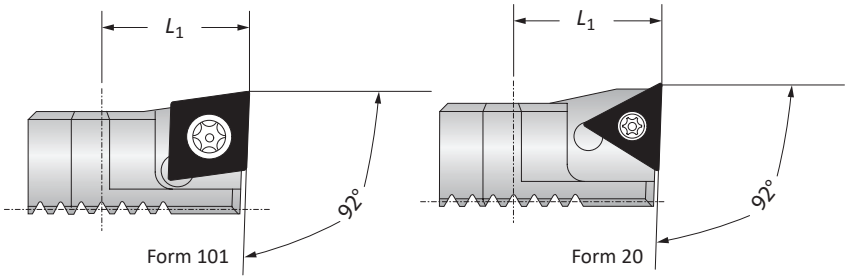

Insert Holders for Abrasive Materials

	Boring Range	Insert Holder L_1	Weight	Insert Form	Part No.
m	100.00 - 205.00	18.00	0.03 (kg)	20	**211061**
	100.00 - 205.00	18.00	0.03 (kg)	101	**211063**
	100.00 - 205.00	18.00	0.03 (kg)	103	**211065**

NOTE: Insert holders used for abrasive materials to protect boring head against chip wash
NOTE: When machining grey cast iron, we recommend using insert holders for abrasive materials with CBN inserts for optimised chip removal.

B10-M: 12-13 Key on B10-B: 1
B10-H
B10: VI-VII

m = Metric (mm)

www.alliedmachine.com | +44 (0) 1384 400 900 | enquiries.eu@alliedmachine.com

537 Accessories | 3E[TECH] Accessories | Clamping Pieces

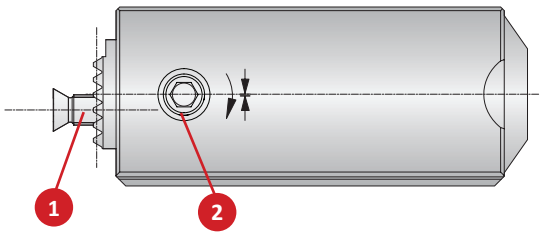

537 Analogue Cassette

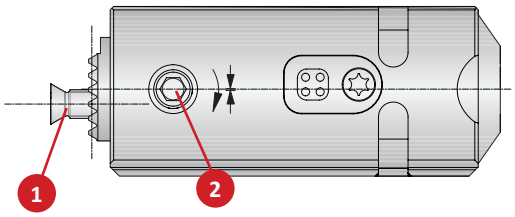

537 3E[TECH+] Cassette

537 Accessories

	Cassette Part No.	1 Countersunk Screw		2 Clamping Screw	
		Part No.	Service Key	Part No.	Service Key
ⓜ	537051	**215462**	**T20 / H**	**115249**	**s4 / F**
	537052	**215462**	**T20 / H**	**315789**	**s4 / F**

3E[TECH+] Accessories

1 Charging Unit Part No.
536016

NOTE: Charging unit sold separately from 3E[TECH+]



NOTE: 3E[TECH+] adjustment accuracy of 0.0001" or 0.001 mm on diameter

3E[TECH] Accessories

1 Sealing Ring Part No.	2 Battery CR2032 Part No.
215483	**515491**

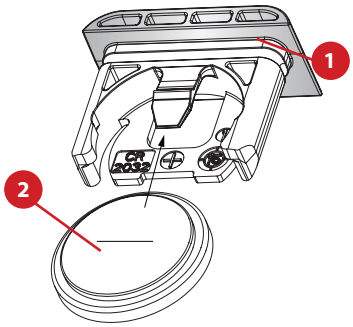

537 Clamping Pieces

Slide Type	Complete Part No.	Service Key		Replacement Components 1 Cap Screw	2 Clamping Nut	3 Disk Spring
Serrated Tool Bodies	**137026**	115578	s6 / B	215101	140118	337105
Basic and Eco Slides	**137027**			215102	215105	337105
Flex Slides	**137019**			415900	215105	337105

NOTE: Clamping pieces sold separately

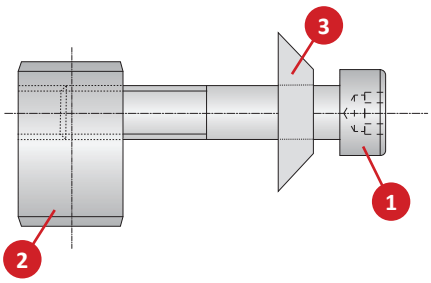

B10-M: 12-13

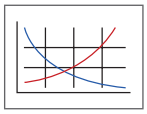

Key on B10-B: 1

B10: VI-VII

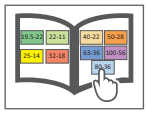

ⓜ = Metric (mm)
Inserts sold separately

Notes

Notes

SECTION

B10-C

Combi-Line Rough and Finish Boring

Wohlhaupter® Rough and Finish Boring

Combi-Line

- Diameter Range: 24.50 mm - 201.00 mm



One tool. Two operations.

The Wohlhaupter Combi-Line combines both rough and finish boring into one operation. The front insert holder is the roughing cutting edge while the shorter holder finishes the hole, saving you time and money.

Your safety and the safety of others is very important. This catalogue contains important safety messages. Always read and follow all safety precautions.

This triangle is a safety hazard symbol. It alerts you to potential safety hazards that can cause tool failure and serious injury.

When you see this symbol in the catalogue, look for a related safety message that may be near this triangle or referred to in the nearby text.

There are safety signal words also used in the catalogue. Safety messages follow these words.

WARNING (shown above) means that failure to follow the precautions in this message could result in tool failure and serious injury.

NOTICE means that failure to follow the precautions in this message could result in damage to the tool or machine but not result in personal injury.

NOTE and **IMPORTANT** are also used. These are important that you read and follow but are not safety-related.

Visit www.alliedmachine.com for the most up-to-date information and procedures.

Applicable Industries

Aerospace | Agriculture | Automotive | Firearms | General Machining | Oil & Gas | Renewable Energy

Reference Icons
The following icons will appear throughout the catalogue to help you navigate between products.

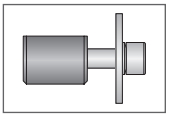

Clamping Elements
For use with insert holders and boring heads

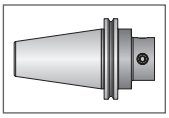

Shanks
A variety of shanks for different machines

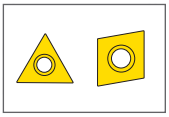

Inserts
For use with insert holder boring heads and boring bars using indexable inserts

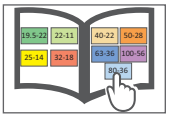

MVS Connection Colour Guide
Detailed instructions and information regarding the MVS connection(s)

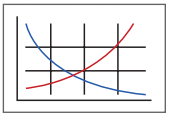

Recommended Cutting Data
Speed and feed recommendations for optimum and safe boring



Through Coolant Option
Indicates that the product is through coolant

Combi-Line Rough and Finish Boring Table of Contents

Combi-Line Introduction

Product Overview . . . . . 2 - 3

Material Removal Percentages | Tool Usage | Same Level Cutting 4

Boring Heads and Insert Holders 5

90° and 95°Approach Angle Same Level Insert Holders - Form 101, 103 6

Accessories 7

Series	Diameter Range Metric (mm)
Combi-Line 401	24.50 - 201.00

Combi-Line Product Overview



Combi-Line
ROUGH & FINISH BORING

Two Operations. One Tool.

Decrease cycle time and tool changes with the Wohlhaupter Combi-Line. The Combi-Line combines rough and finish boring into one tool with height displaced insert holders.

Reduce your ***cycle time*** with the Combi-Line.

- Diameter range: 24.50 mm - 201.00 mm
- Reduce cycle and tool changing time
- Available in semi-standard same level or height displaced insert holders
- Through coolant
- 0.002 mm vernier adjustment on finishing insert holder
- Max spindle speed: 1524 m/min



IMPORTANT: Max spindle speed refers to maximum possible speed for an individual boring head and is not a recommended parameter. Refer to page B10-M: 12 for recommended application-specific parameters. Factory technical assistance is available for your specific applications through our Application Engineering department.
email: **engineering.eu@alliedmachine.com**

Cycle time is crucial. Why not choose the best process?

Application: Ductile Cast Iron

Finish Diameter: 50 mm (+/- 0.013 mm)

Pre-Hole Diameter: 45 mm

Boring Depth: 209 mm

Hole Finish: 0.8 Ra



Measure	1st Process Option	
	Step 1 Rough 49 mm Competitor 1.5" High Feed Milling Tool	Step 2 Finish 50 mm Wohlhaupter 310 Boring Head
Speed	2500 RPM	1165 PRM
Feed Rate	3886.2 mm/min	11.8 mm/min
Total Passes	77	1
Cycle Time (per hole)	1.93 min	1.77 min
Tool Change Time	15 sec	
Cycle Time (per part)	**3 min 54 sec**	

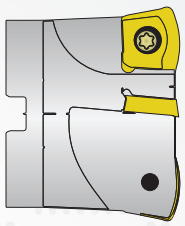

1.5" High Feed Milling Tool



Wohlhaupter 310 Boring Head

Measure	2nd Process Option	
	Step 1 Rough 49 mm Wohlhaupter Twin Cutter at 49 mm Ø	Step 2 Finish 50 mm Wohlhaupter 310 Boring Head
Speed	990 RPM	1165 PRM
Feed Rate	301.88 mm/min	11.8 mm/min
Total Passes	1	1
Cycle Time (per hole)	0.69 min	1.77 min
Tool Change Time	15 sec	
Cycle Time (per part)	**2 min 46 sec**	



Wohlhaupter Twin Cutter



Wohlhaupter 310 Boring Head

OUR ***SOLUTION***

Combi-Line Rough and Finish Boring

Measure	3rd Process Option Finish 50 mm Wohlhaupter Combi-Line
Speed	1165 RPM
Feed Rate	11.8 mm/min
Total Passes	1
Cycle Time (per hole)	1.77 min
Tool Change Time	0
Cycle Time (per part)	**1 min 46 sec**



- Combi-Line assembly:
  (1) ***Insert holders (x2): 402021***
  (2) ***Serrated tool body: 404006***
  (3) ***Shank: 353014***

Boring inserts
- ***Item No. 297653WHC19***

60 seconds of
total cycle time saved

1 tool vs. 2 tools saves you time and money

Material Removal Percentages | Tool Usage | Same-Level Cutting

Material Removal Percentages

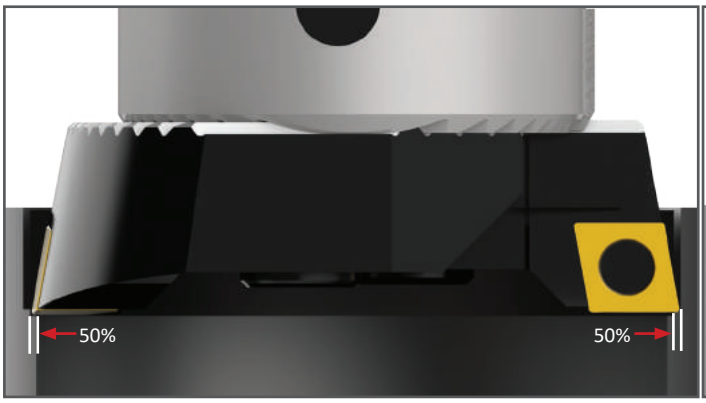

Material removal up to 4.00 mm on diameter: **50% roughing 50% finishing**

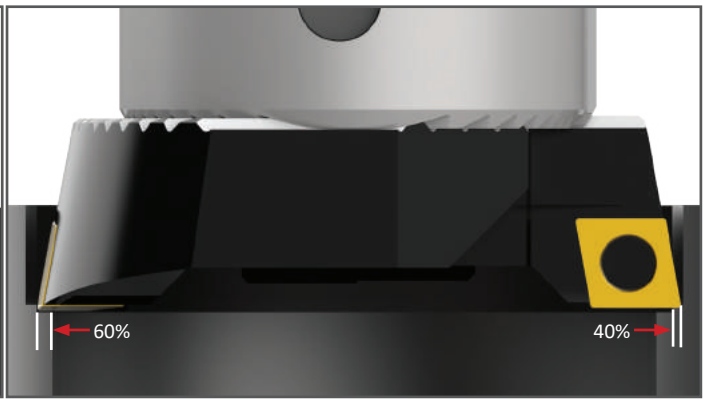

Material removal up to 4.00 mm - 7.00 mm on diameter: **60% roughing 40% finishing**

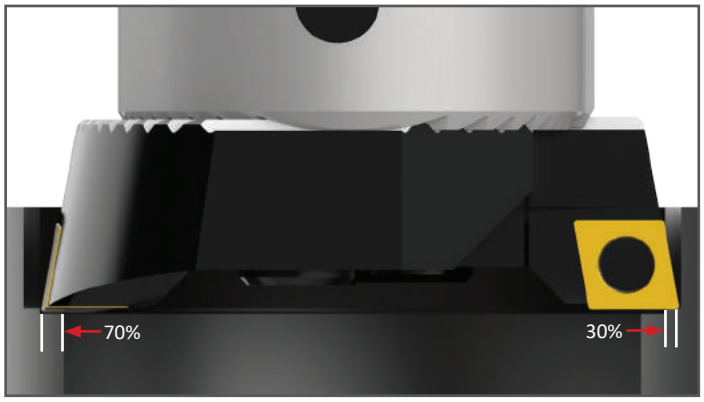

Material removal up to 7.00 mm - 10.00 mm on diameter:
70% roughing 30% finishing

- For tools with a length-to-diameter ratio greater than 4:1, the existing hole diameter should be no more than 4.00 mm smaller than the finish diameter. The 50% roughing and 50% finishing rule should be applied.
- When boring with severe interruptions, the existing hole diameter should be no more than 4.00 mm smaller than the finish diameter. The 50% roughing and 50% finishing rule should be applied.

IMPORTANT: Consult application engineering for technical support when using Combi-Line tools in holes with interruptions.
email: **engineering.eu@alliedmachine.com**

Tool Usage

- For most applications, the same inserts should be used in both the roughing and finishing insert holders.
- To insure proper chip breaking, the finishing insert holder DOC must be at least 0.50 mm
- Up to a 4:1 length-to-diameter ratio, standard insert holders with a height displacement of up to 0.30 mm can be used.
- Inserts with wiper geometry are recommended only for special Combi-Line applications.

Same-Level Cutting (0.08 mm Height Displacement)

- With length-to-diameter ratios greater than 4:1, same-level insert holders are recommended to reduce the risk of vibration.
- Same-level cutting inserts will create a 0.08 mm step between the roughing and finishing sides.
- Boring blind holes may require the use of same-level insert holders. (If a true 90° flat bottom is required, a secondary operation to clean up the bottom step may be needed.)
- Combi-Line should be applied as a single-effective cutting tool even when same-level insert holders are used.

Boring Heads and Insert Holders

Diameter Range: 24.50 mm - 201.00 mm



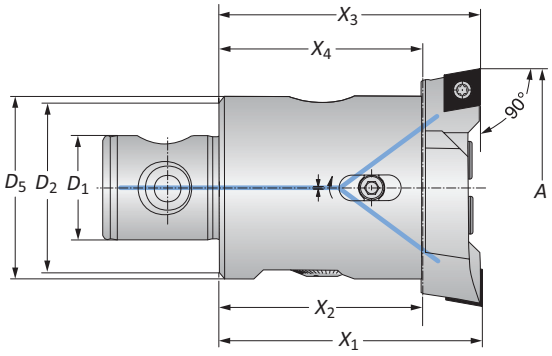

	Connection	Boring Range	Boring Head					Weight	Insert Form	Part No.	
	D_2 | D_1	A	X_1	X_3	X_2	X_4	D_5			(x2)* Insert Holder**	Boring Head
	22 - 11	24.50 - 29.50	46.00	45.75	34.00	33.75	–	0.10 (kg)	101	**402029**	**401003**
	25 - 14	29.00 - 37.00	56.00	55.75	41.00	40.75	26.00	0.20 (kg)	101	**402009**	**401004**
	25 - 14	29.00 - 37.00	56.00	55.75	41.00	40.75	26.00	0.20 (kg)	103	**402011**	**401004**
	25 - 14	36.00 - 44.00	56.00	55.75	41.00	40.75	30.00	0.30 (kg)	101	**402017**	**401005**
	25 - 14	36.00 - 44.00	56.00	55.75	41.00	40.75	30.00	0.30 (kg)	103	**402019**	**401005**
	32 - 18	43.00 - 54.00	66.00	65.70	48.00	47.70	34.00	0.40 (kg)	103	**402021**	**401006**
ⓜ	40 - 22	53.00 - 66.00	75.00	74.70	55.00	54.70	–	0.70 (kg)	103	**402005**	**401007**
	50 - 28	65.00 - 83.00	75.00	74.70	55.00	54.70	–	1.10 (kg)	103	**402013**	**401008**
	63 - 36	82.00 - 103.00	90.00	89.70	70.00	69.70	–	2.20 (kg)	103	**402001**	**401009**
	80 - 36	102.00 - 127.00	90.00	89.70	66.00	65.70	85.00	3.00 (kg)	103	**402025**	**401010**
	80 - 36	127.00 - 152.00	90.00	89.70	66.00	65.70	85.00	3.10 (kg)	103	**402026**	**401010**
	80 - 36	151.00 - 176.00	90.00	89.70	66.00	65.70	134.00	3.80 (kg)	103	**402025**	**401011**
	80 - 36	176.00 - 201.00	90.00	89.70	66.00	65.70	134.00	3.90 (kg)	103	**402026**	**401011**

*(2) insert holders are required
**Insert holders sold individually

B10-M: 12-13 | B10-C: 6 | B10-F | B10-H | B10: VI-VII
Key on B10-C: 1

ⓜ = Metric (mm)
Inserts sold separately

IMPORTANT: Max spindle speed refers to maximum possible speed for an individual boring head and is not a recommended parameter. Refer to page B10-M: 12 for recommended application-specific parameters. Factory technical assistance is available for your specific applications through our Application Engineering department.
email: **engineering.eu@alliedmachine.com**

90° and 95° Approach Angle Same Level Insert Holders - Form 101 and 103

Diameter Range: 0.965" - 7.913" (24.51mm - 200.90mm)

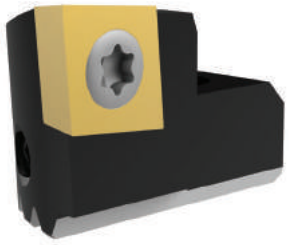

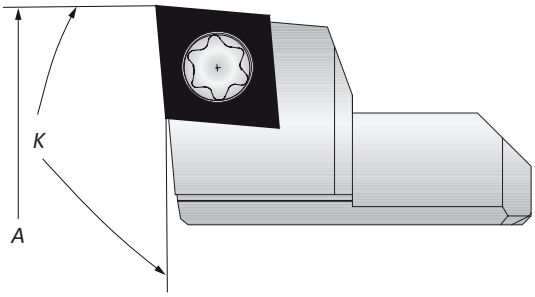

	Boring Tool	Boring Range A	90° Insert Holder K	90° Insert Holder Insert Form	90° Insert Holder Part No.	95° Insert Holder K	95° Insert Holder Insert Form	95° Insert Holder Part No.
	401003	24.51 - 29.48	90°	101	**K32616**	95°	101	**K32618**
	401004	29.00 - 37.00	90°	103	**K31372**	95°	103	**K31403**
	401005	35.99 - 43.99	90°	103	**K31373**	95°	103	**K31404**
	401006	43.00 - 54.00	90°	103	**K31374**	95°	103	**K31405**
	401007	53.00 - 65.98	90°	103	**K31375**	95°	103	**K31406**
ⓜ	401008	64.99 - 83.00	90°	103	**K31376**	95°	103	**K31407**
	401009	81.99 - 102.90	90°	103	**K31377**	95°	103	**K31408**
	401010	102.00 - 127.00	90°	103	**K31628**	95°	103	**K31632**
	401010	127.00 - 151.90	90°	103	**K31630**	95°	103	**K31634**
	401011	151.00 - 200.90	90°	103	**K31628**	95°	103	**K31632**
	401011	175.90 - 200.90	90°	103	**K31630**	95°	103	**K31634**

NOTE: Same level insert holders will still produce a 0.003" (0.0001 mm) step

B10-M: 12-13
Key on B10-C:1
B10-H
B10: VI-VII

ⓜ = Metric (mm)
Inserts sold separately

www.alliedmachine.com | +44 (0) 1384 400 900 | enquiries.eu@alliedmachine.com

Accessories

Screws | Clamping Elements

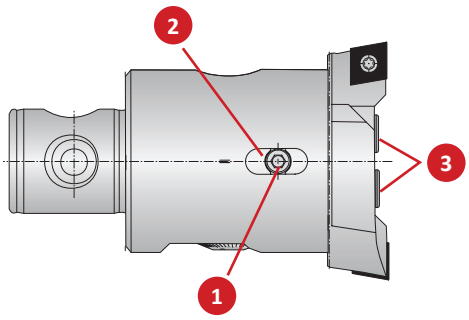

	Boring Head Part No.	Part No. 1 Clamp Screw	Service Key	2 Clamping Piece	3 Cap Screw	Service Key
	401003	**401223**	s2.5 / A	–	**401323**	s3 / B
	401004	**401224**	s2.5 / B	**401204**	**401324**	s4 / B
	401005	**401225**	s2.5 / B	**401205**	**401324**	s4 / B
	401006	**401226**	s3 / B	**401206**	**401324**	s4 / B
ⓜ	401007	**401227**	s3 / B	**401207**	**401327**	s5 / B
	401008	**115288**	s4 / B	**401208**	**401329**	s6 / B
	401009	**215501**	s4 / B	**401209**	**401329**	s6 / B
	401010	**401230**	s4 / B	**401210**	**019183**	s8 / C
	401011	**401230**	s4 / B	**401210**	**019183**	s8 / C

B10-M: 12-13

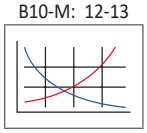

Key on B10-C:1

B10: VI-VII

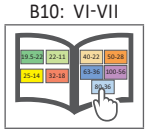

ⓜ = Metric (mm)

SECTION

B10-D

Rough Machining

Wohlhaupter® Rough Machining

Twin Cutters | Chamfering Tools | Grooving Tools | Axial Grooving | Reverse Machining | VolCut

- Diameter Range: 19.50 mm - 245.00 mm



Variety of tooling. Versatile operations.

A versatile range of tools for rough machining includes rough boring, chamfering, reverse machining, circular milling, and axial grooving. The insert holders with various insert pockets as well as height displaced insert holders are able to be easily adjusted for a quick setup process.

Your safety and the safety of others is very important. This catalogue contains important safety messages. Always read and follow all safety precautions.



This triangle is a safety hazard symbol. It alerts you to potential safety hazards that can cause tool failure and serious injury.

When you see this symbol in the catalogue, look for a related safety message that may be near this triangle or referred to in the nearby text.

There are safety signal words also used in the catalogue. Safety messages follow these words.

WARNING

WARNING (shown above) means that failure to follow the precautions in this message could result in tool failure and serious injury.

NOTICE means that failure to follow the precautions in this message could result in damage to the tool or machine but not result in personal injury.

NOTE and **IMPORTANT** are also used. These are important that you read and follow but are not safety-related.

Visit www.alliedmachine.com for the most up-to-date information and procedures.

Applicable Industries



Aerospace | Agriculture | Automotive | Firearms | General Machining | Oil & Gas | Renewable Energy

Reference Icons
The following icons will appear throughout the catalogue to help you navigate between products.

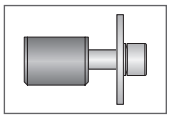

Clamping Elements
For use with insert holders and boring heads

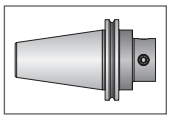

Shanks
A variety of shanks for different machines

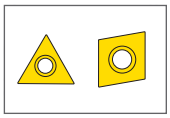

Inserts
For use with insert holder boring heads and boring bars using indexable inserts

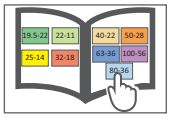

MVS Connection Colour Guide
Detailed instructions and information regarding the MVS connection(s)

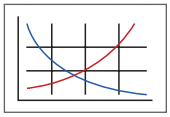

Recommended Cutting Data
Speed and feed recommendations for optimum and safe boring



Though Coolant Option
Indicates that the product is through coolant

Rough Machining Table of Contents

Introduction
Product Overview . . . . . 2 - 4

Twin Cutters
Twin Cutters Same Level . . . . . 5 - 9
Twin Cutters Same Level Tangential Inserts 10
Twin Cutters Height Displaced . . . . . 11 - 13
Twin Cutters Height Displaced Tangential Inserts 14

Chamfering
Chamfering Tools . . . . . 15 - 17

Grooving
Grooving Tools for Circular Milling 18
Axial Grooving Tools 19

Reverse Machining
Reverse Machining Tools 20

VolCut Tooling
VolCut Insert Holders 21
VolCut Technical Information 22

Accessories 23

Series	Diameter Range Metric (mm)
Twin Cutters	19.50 - 205.00
Chamfering	19.00 - 216.00
Radial Grooving	20.00 - 79.00
Axial Grooving	20.00 - 205.00
Reverse Machining	29.00 - 245.00



Roughing Tools
ROUGH MACHINING

Versatile tools for a variety of applications.

- Diameter range: 19.50 mm - 245.00 mm
- Tangential inserts and insert holders also available
- Serrated tool bodies can be used for multiple applications including rough boring, chamfering, back boring, and axial grooving
- Insert holders can be used on large diameter Alu-Line serrated tool bodies and slides located in section G: 100.00 mm - 3255.00 mm

Roughing Applications

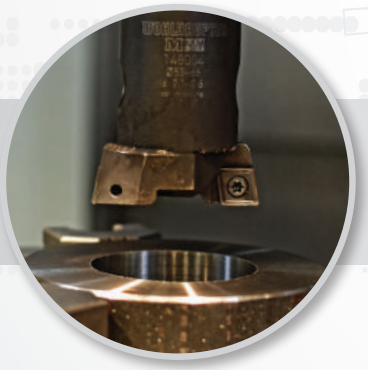

▸ Twin Cutter Assembly:
(1) Reducer: 219087
(2) Serrated tool body: 148004
(3) Insert holders: 151004
(4) Inserts: 10408M158HC79



▸ Tangential Cutter Assembly:
(1) Shank: 353007
(2) Serrated tool body: 148005
(3) Insert holders: 151043
(4) Inserts: 00508M880HC198

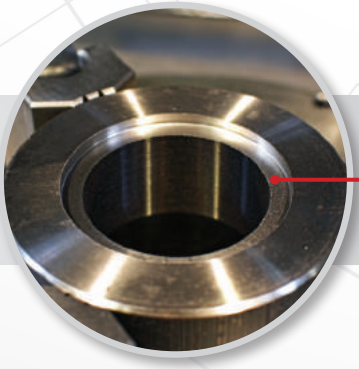

First Tangential Cut



- Tangential Cutter Assembly:
  (1) Shank: 353008
  (2) Serrated tool body: 148006
  (3) Insert holders: 151035
  (4) Inserts: 397594WHC198

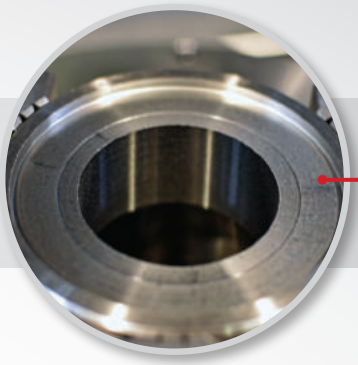



- Axial Grooving Assembly:
  (1) Shank: 353009
  (2) Serrated tool body: 148007
  (3) Support block: 226011
  (4) Insert holder: 226010
  (5) Insert: 297978WCH136

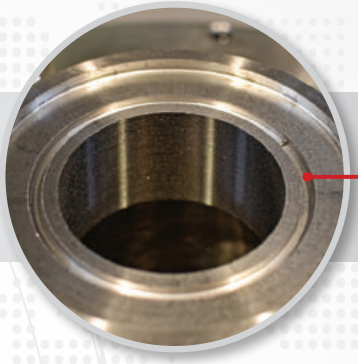



- Chamfer Assembly:
  (1) Shank: 353003
  (2) Serrated tool body: 148004
  (3) Insert holder: 201009
  (4) Inserts: 297497WHC79

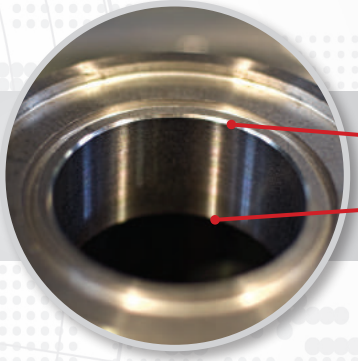



- Radial Grooving Assembly:
  (1) Shank: 353007
  (2) Grooving tool: 143055
  (3) Inserts: 097254WCH136

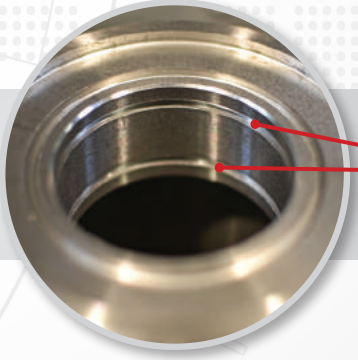



- Finished Application

Case Study

Cycle time is crucial. Why not choose the best process?



Application: Ductile Cast Iron

Finish Diameter: 49 mm

Pre-Hole Diameter: 45 mm

Boring Depth: 209 mm

Measure	Rough 49 mm Competitor 1.5" High Feed Milling Tool
Speed	2500 RPM
Feed Rate	3886.2 mm/min
Total Passes	77
Cycle Time (per part)	**1.93 min**

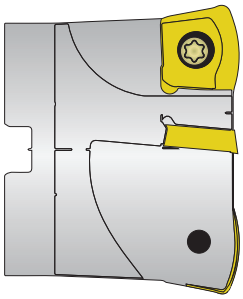

1.5" High Feed Milling Tool

OUR *SOLUTION*

Wohlhaupter® Twin Cutter

Measure	Rough 49 mm Wohlhaupter Twin Cutter
Speed	900 RPM
Feed Rate	301.8 mm/min
Total Passes	1
Cycle Time (per part)	**0.69 min**

- Twin Cutter assembly:
  (1) ***Insert Holders (x2): 151023***
  (2) ***Serrated tool body: 148018***
  (3) ***Shank: 353015***

Boring inserts
- ***Item No.: 297239WHC79***

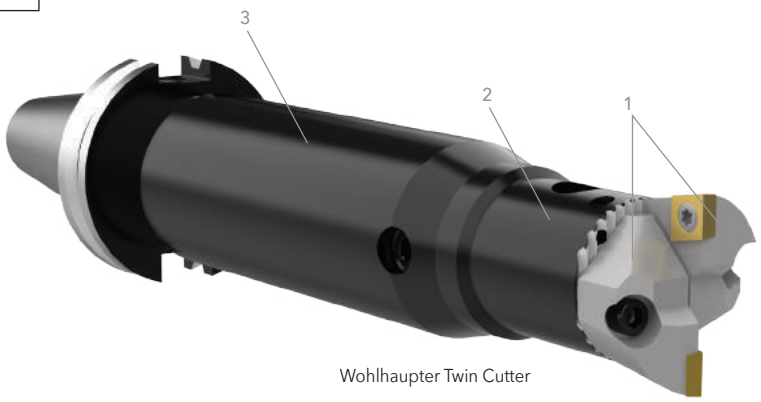

Wohlhaupter Twin Cutter

Twin Cutters Same Level

90° | Diameter Range: 19.50 mm - 30.00 mm



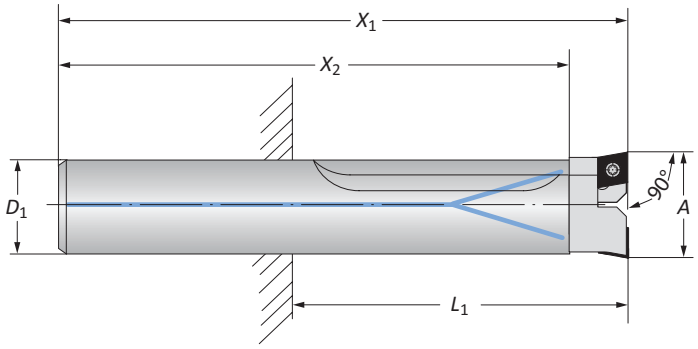

Twin Cutters Same Level

	Connection	Boring Range	Twin Cutter					Part No.	
	D_1	A	X_1	X_2	L_1	Weight	Insert Form	Insert Holder	Serrated Body
ⓜ	18	19.50 - 23.00	150.00	138.00	80.00	0.30 (kg)	101	**235031**	**235021**
ⓜ	20	22.50 - 26.00	150.00	138.00	90.00	0.30 (kg)	101	**235032**	**235022**
ⓜ	23	25.50 - 30.00	160.00	148.00	100.00	0.30 (kg)	101	**235033**	**235023**

NOTE: Insert holders sold in quantities of 1, and inserts sold separately



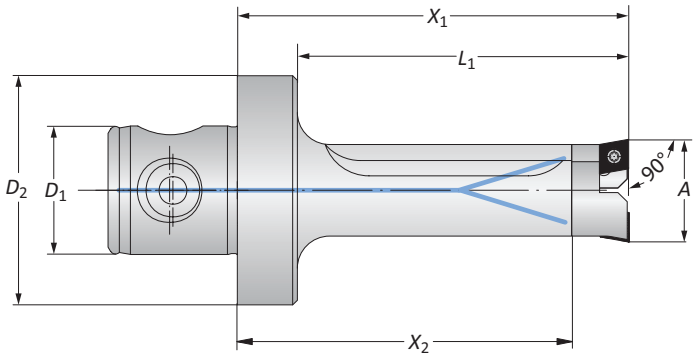

Twin Cutters Same Level

	Connection	Boring Range	Twin Cutter					Part No.	
	$D_2 \mid D_1$	A	X_1	X_2	L_1	Weight	Insert Form	Insert Holder	Serrated Body
ⓜ	50 - 28	19.50 - 23.00	85.00	73.00	72.00	0.40 (kg)	101	**235031**	**235001**
ⓜ	50 - 28	22.50 - 26.00	90.00	78.00	77.00	0.50 (kg)	101	**235032**	**235002**
ⓜ	50 - 28	25.50 - 30.00	95.00	83.00	82.00	0.50 (kg)	101	**235033**	**235003**
ⓜ	63 - 36	19.50 - 23.00	85.00	73.00	72.00	0.70 (kg)	101	**235031**	**235011**
ⓜ	63 - 36	22.50 - 26.00	90.00	78.00	77.00	0.70 (kg)	101	**235032**	**235012**
ⓜ	63 - 36	25.50 - 30.00	95.00	83.00	82.00	0.83 (kg)	101	**235033**	**235013**

NOTE: Insert holders sold in quantities of 1, and inserts sold separately

Key on B10-D: 1

B10-M: 12-13 | B10-D: 23 | B10-F | B10-H | B10: VI-VII

ⓜ = Metric (mm)

Inserts sold separately

IMPORTANT: Max spindle speed refers to maximum possible speed for an individual boring head and is not a recommended parameter. Refer to page B10-M: 12 for recommended application-specific parameters. Factory technical assistance is available for your specific applications through our Application Engineering department.
email: **engineering.eu@alliedmachine.com**

Twin Cutters Same Level

90° | 5xD | Diameter Range: 29.00 mm - 66.00 mm



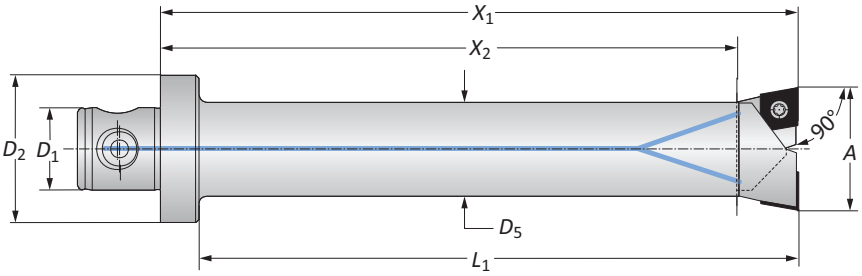

	Connection	Boring Range	Twin Cutter						Part No.	
	$D_2 \mid D_1$	A	X_1	X_2	L_1	D_5	Weight	Insert Form	Insert Holder	Serrated Body
ⓜ	50 - 28	29.00 - 37.00	155.00	141.00	142.00	26.00	0.90 (kg)	103	**151001**	**148021**
	50 - 28	36.00 - 44.00	175.00	161.00	162.00	32.00	1.30 (kg)	103	**151002**	**148022**
	50 - 28	43.00 - 54.00	215.00	195.00	202.00	37.00	1.90 (kg)	103	**151023**	**148023**
	50 - 28	43.00 - 54.00	215.00	195.00	202.00	37.00	1.90 (kg)	104	**151003**	**148023**
	50 - 28	53.00 - 66.00	215.00	195.00	202.00	44.00	2.50 (kg)	103	**151024**	**148024**
	50 - 28	53.00 - 66.00	215.00	195.00	202.00	44.00	2.50 (kg)	104	**151004**	**148024**

NOTE: Different lengths available upon request.
NOTE: Insert holders sold in quantities of 1, and inserts sold separately

B10-M: 12-13 | B10-D: 23 | B10-F | B10-H | B10: VI-VII

Key on B10-D: 1

ⓜ = Metric (mm)
Inserts sold separately

IMPORTANT: Max spindle speed refers to maximum possible speed for an individual boring head and is not a recommended parameter. Refer to page B10-M: 12 for recommended application-specific parameters. Factory technical assistance is available for your specific applications through our Application Engineering department.
email: **engineering.eu@alliedmachine.com**

Twin Cutters Same Level

90° | Diameter Range: 29.00 mm - 103.00 mm



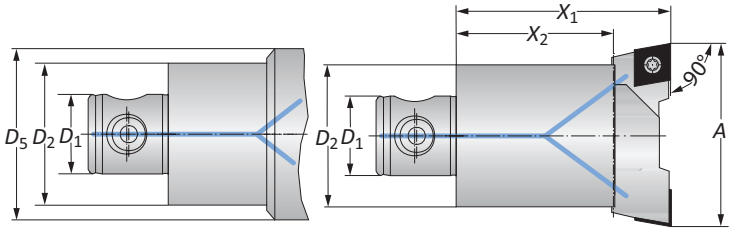

	Connection	Boring Range	Twin Cutter					Part No.	
	D_2 | D_1	A	X_1	X_2	D_5	Weight	Insert Form	Insert Holder	Serrated Body
	25 - 14	29.00 - 37.00	56.00	42.00	–	0.20 (kg)	103	**151001**	**148001**
	25 - 14	36.00 - 44.00	56.00	42.00	30.00	0.20 (kg)	103	**151002**	**148002**
	32 - 18	36.00 - 44.00	56.00	42.00	30.00	0.40 (kg)	103	**151002**	**148017**
	32 - 18	43.00 - 54.00	66.00	46.00	36.00	0.40 (kg)	103	**151023**	**148003**
	32 - 18	43.00 - 54.00	66.00	46.00	36.00	0.40 (kg)	104	**151003**	**148003**
	40 - 22	43.00 - 54.00	66.00	46.00	36.00	0.70 (kg)	103	**151023**	**148018**
Ⓜ	40 - 22	43.00 - 54.00	66.00	46.00	36.00	0.70 (kg)	104	**151003**	**148018**
	40 - 22	53.00 - 66.00	75.00	55.00	–	0.70 (kg)	103	**151024**	**148004**
	40 - 22	53.00 - 66.00	75.00	55.00	–	0.70 (kg)	104	**151004**	**148004**
	50 - 28	65.00 - 83.00	75.00	55.00	–	1.10 (kg)	103	**151025**	**148005**
	50 - 28	65.00 - 83.00	75.00	55.00	–	1.10 (kg)	104	**151005**	**148005**
	63 - 36	82.00 - 103.00	90.00	60.00	–	1.90 (kg)	103	**151026**	**148006**
	63 - 36	82.00 - 103.00	90.00	60.00	–	1.90 (kg)	104	**151086**	**148006**
	63 - 36	82.00 - 103.00	90.00	60.00	–	1.90 (kg)	105	**151006**	**148006**

NOTE: Insert holders sold in quantities of 1, and inserts sold separately

B10-M: 12-13 | B10-D: 23 | B10-F | B10-H | B10: VI-VII

Key on B10-D: 1

Ⓜ = Metric (mm)
Inserts sold separately

IMPORTANT: Max spindle speed refers to maximum possible speed for an individual boring head and is not a recommended parameter. Refer to page B10-M: 12 for recommended application-specific parameters. Factory technical assistance is available for your specific applications through our Application Engineering department.
email: **engineering.eu@alliedmachine.com**

Twin Cutters Same Level

90° | Diameter Range: 100.00 mm - 205.00 mm



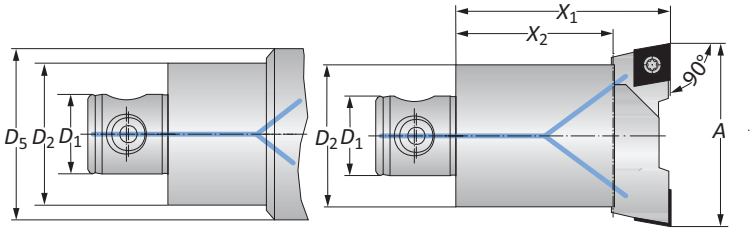

	Connection	Boring Range	Twin Cutter					Part No.	
	$D_2 \mid D_1$	A	X_1	X_2	D_5	Weight	Insert Form	Insert Holder	Serrated Body
	80 - 36	100.00 - 130.00	90.00	60.00	–	3.00 (kg)	103	**151027**	**148007**
	80 - 36	100.00 - 130.00	90.00	60.00	–	3.00 (kg)	104	**151087**	**148007**
	80 - 36	100.00 - 130.00	90.00	60.00	–	3.00 (kg)	105	**151007**	**148007**
	80 - 36	125.00 - 155.00	90.00	60.00	–	3.20 (kg)	103	**151028**	**148007**
ⓜ	80 - 36	125.00 - 155.00	90.00	60.00	–	3.20 (kg)	104	**151088**	**148007**
	80 - 36	125.00 - 155.00	90.00	60.00	–	3.20 (kg)	105	**151008**	**148007**
	80 - 36	150.00 - 205.00	90.00	60.00	125.00	4.00 (kg)	103	**151028**	**148009**
	80 - 36	150.00 - 205.00	90.00	60.00	125.00	4.00 (kg)	104	**151088**	**148009**
	80 - 36	150.00 - 205.00	90.00	60.00	125.00	4.00 (kg)	105	**151008**	**148009**

NOTE: Insert holders sold in quantities of 1, and inserts sold separately

B10-M: 12-13 | B10-D: 23 | B10-F | B10-H | B10: VI-VII

Key on B10-D: 1

ⓜ = Metric (mm)
Inserts sold separately

IMPORTANT: Max spindle speed refers to maximum possible speed for an individual boring head and is not a recommended parameter. Refer to page B10-M: 12 for recommended application-specific parameters. Factory technical assistance is available for your specific applications through our Application Engineering department.
email: **engineering.eu@alliedmachine.com**

Twin Cutters Same Level

80° | Diameter Range: 29.00 mm - 205.00 mm

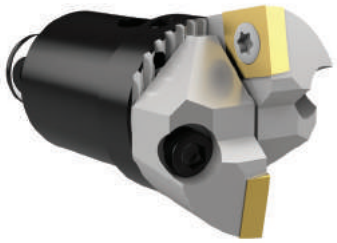

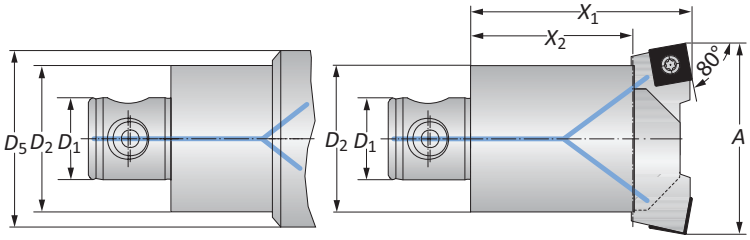

	Connection	Boring Range	Twin Cutter					Part No.	
	D_2 | D_1	A	X_1	X_2	D_5	Weight	Insert Form	Insert Holder	Serrated Tool Body
	25 - 14	29.00 - 37.00	56.00	42.00	–	0.20 (kg)	112	**151011**	**148001**
	25 - 14	36.00 - 44.00	56.00	42.00	30.00	0.20 (kg)	112	**151012**	**148002**
	32 - 18	36.00 - 44.00	62.00	42.00	30.00	0.40 (kg)	112	**151012**	**148017**
	32 - 18	43.00 - 54.00	66.00	46.00	36.00	0.40 (kg)	113	**151013**	**148003**
	40 - 22	43.00 - 54.00	66.00	46.00	36.00	0.70 (kg)	113	**151013**	**148018**
m	40 - 22	53.00 - 66.00	75.00	55.00	–	0.70 (kg)	113	**151014**	**148004**
	50 - 28	65.00 - 83.00	75.00	55.00	–	1.10 (kg)	113	**151015**	**148005**
	63 - 36	82.00 - 103.00	90.00	60.00	–	2.30 (kg)	113	**151036**	**148006**
	80 - 36	100.00 - 130.00	90.00	60.00	–	3.00 (kg)	113	**151037**	**148007**
	80 - 36	125.00 - 155.00	90.00	60.00	–	3.20 (kg)	113	**151038**	**148007**
	80 - 36	150.00 - 205.00	90.00	60.00	125.00	4.00 (kg)	113	**151038**	**148009**

NOTE: Insert holders sold in quantities of 1, and inserts sold separately

B10-M: 12-13 | B10-D: 23 | B10-F | B10-H | B10: VI-VII

Key on B10-D: 1

m = Metric (mm)

Inserts sold separately

IMPORTANT: Max spindle speed refers to maximum possible speed for an individual boring head and is not a recommended parameter. Refer to page B10-M: 12 for recommended application-specific parameters. Factory technical assistance is available for your specific applications through our Application Engineering department.
email: **engineering.eu@alliedmachine.com**

Twin Cutters Same Level Tangential Inserts

Diameter Range: 53.00 mm - 205.00 mm



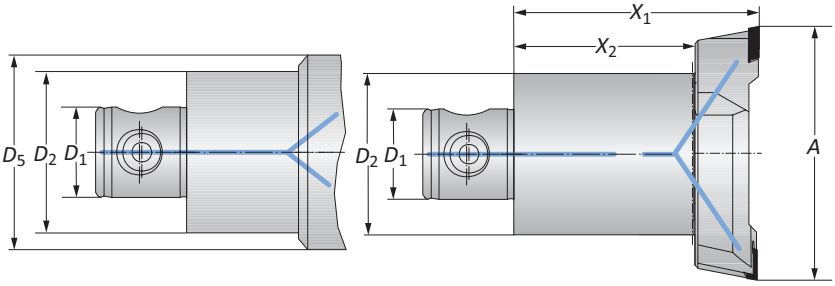

	Connection	Boring Range	Twin Cutter					Part No.	
	$D_2 \mid D_1$	A	X_1	X_2	D_5	Weight	Insert Form	Insert Holder	Serrated Body
	40 - 22	53.00 - 66.00	75.00	55.00	–	0.70 (kg)	04	**151022**	**148004**
	50 - 28	65.00 - 83.00	75.00	55.00	–	1.00 (kg)	04	**151032**	**148005**
	50 - 28	65.00 - 83.00	75.00	55.00	–	1.00 (kg)	05	**151043**	**148005**
ⓜ	63 - 36	82.00 - 103.00	90.00	60.00	–	2.20 (kg)	05	**151035**	**148006**
	80 - 36	100.00 - 130.00	90.00	60.00	–	3.00 (kg)	05	**151009**	**148007**
	80 - 36	125.00 - 155.00	90.00	60.00	–	3.10 (kg)	05	**151010**	**148007**
	80 - 36	150.00 - 205.00	90.00	60.00	125.00	4.00 (kg)	05	**151010**	**148009**

NOTE: Insert holders sold in quantities of 1, and inserts sold separately

B10-M: 12-13 | B10-D: 23 | B10-F | B10-H | B10: VI-VII

Key on B10-D: 1

ⓜ = Metric (mm)

Inserts sold separately

IMPORTANT: Max spindle speed refers to maximum possible speed for an individual boring head and is not a recommended parameter. Refer to page B10-M: 12 for recommended application-specific parameters. Factory technical assistance is available for your specific applications through our Application Engineering department.
email: **engineering.eu@alliedmachine.com**

Twin Cutters Height Displaced

90° | Diameter Range: 29.00 mm - 103.00 mm

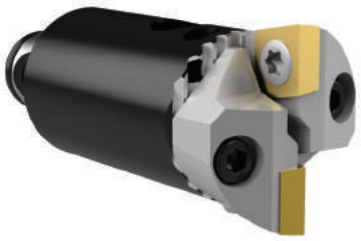

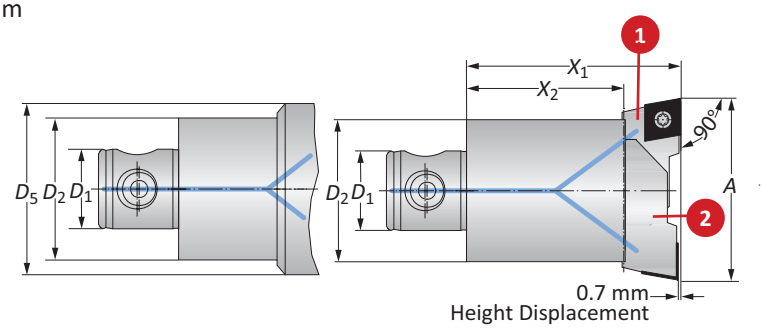

	Connection	Boring Range	Twin Cutter					Part No.		
	D_2 | D_1	A	X_1	X_2	D_5	Weight	Insert Form	1 Insert Holder	2. Insert Holder (-0.7 mm)	Serrated Body
	25 - 14	29.00 - 37.00	56.00	42.00	–	0.20 (kg)	103	**151001**	**151061**	**148001**
	25 - 14	36.00 - 44.00	56.00	42.00	30.00	0.20 (kg)	103	**151002**	**151062**	**148002**
	32 - 18	36.00 - 44.00	56.00	42.00	30.00	0.40 (kg)	103	**151002**	**151062**	**148017**
	32 - 18	43.00 - 54.00	66.00	46.00	36.00	0.40 (kg)	104	**151003**	**151093**	**148003**
ⓜ	40 - 22	43.00 - 54.00	66.00	46.00	36.00	0.70 (kg)	104	**151003**	**151093**	**148018**
	40 - 22	53.00 - 66.00	75.00	55.00	–	0.70 (kg)	104	**151004**	**151094**	**148004**
	50 - 28	65.00 - 83.00	75.00	55.00	–	1.10 (kg)	104	**151005**	**151095**	**148005**
	63 - 36	82.00 - 103.00	90.00	60.00	–	2.40 (kg)	104	**151086**	**151090**	**148006**
	63 - 36	82.00 - 103.00	90.00	60.00	–	2.40 (kg)	105	**151006**	**151096**	**148006**

NOTE: Insert holders sold in quantities of 1, and inserts sold separately

B10-M: 12-13 | B10-D: 23 | B10-F | B10-H | B10: VI-VII

Key on B10-D: 1

ⓜ = Metric (mm)

Inserts sold separately

IMPORTANT: Max spindle speed refers to maximum possible speed for an individual boring head and is not a recommended parameter. Refer to page B10-M: 12 for recommended application-specific parameters. Factory technical assistance is available for your specific applications through our Application Engineering department.
email: **engineering.eu@alliedmachine.com**

Twin Cutters Height Displaced

90° | 5xD | Diameter Range: 29.00 mm - 66.00 mm



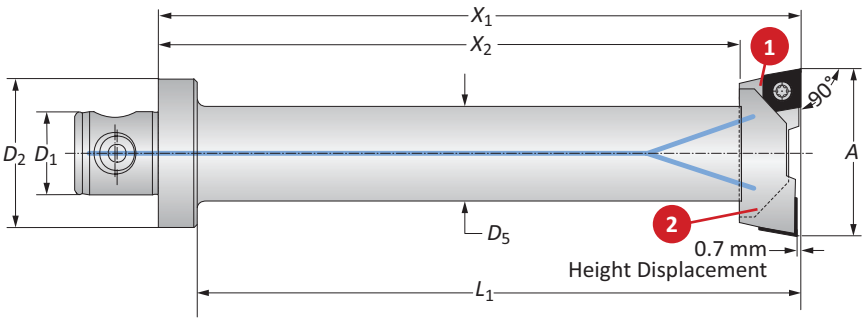

	Connection	Boring Range	Twin Cutter						Part No.		
	D_2 | D_1	A	X_1	X_2	L_1	D_5	Weight	Insert Form	1. Insert Holder	2. Insert Holder (-0.7 mm)	Serrated Body
	50 - 28	29.00 - 37.00	155.00	141.00	142.00	26.00	0.90 (kg)	103	**151001**	**151061**	**148021**
m	50 - 28	36.00 - 44.00	175.00	161.00	162.00	32.00	1.30 (kg)	103	**151002**	**151062**	**148022**
	50 - 28	43.00 - 54.00	215.00	195.00	202.00	37.00	1.90 (kg)	104	**151003**	**151093**	**148023**
	50 - 28	53.00 - 66.00	215.00	195.00	202.00	44.00	2.50 (kg)	104	**151004**	**151094**	**148024**

NOTE: Different lengths available upon request.
NOTE: Insert holders sold in quantities of 1, and inserts sold separately

B10-M: 12-13 | B10-D: 23 | B10-F | B10-H | B10: VI-VII

Key on B10-D: 1

m = Metric (mm)
Inserts sold separately

IMPORTANT: Max spindle speed refers to maximum possible speed for an individual boring head and is not a recommended parameter. Refer to page B10-M: 12 for recommended application-specific parameters. Factory technical assistance is available for your specific applications through our Application Engineering department.
email: **engineering.eu@alliedmachine.com**

Twin Cutters Height Displaced

90° | Diameter Range: 100.00 mm - 205.00 mm



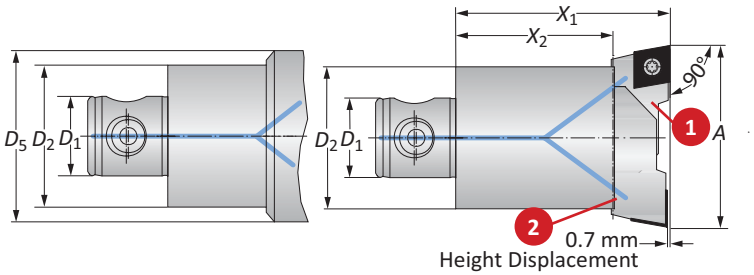

	Connection	Boring Range	Twin Cutter					Part No.		
	D_2 | D_1	A	X_1	X_2	D_5	Weight	Insert Form	1. Insert Holder	2. Insert Holder (-0.7 mm)	Serrated Body
	80 - 36	100.00 - 130.00	90.00	60.00	–	3.00 (kg)	104	**151087**	**151091**	**148007**
	80 - 36	100.00 - 130.00	90.00	60.00	–	3.00 (kg)	105	**151007**	**151097**	**148007**
ⓜ	80 - 36	125.00 - 155.00	90.00	60.00	–	3.20 (kg)	104	**151088**	**151092**	**148007**
	80 - 36	125.00 - 155.00	90.00	60.00	–	3.20 (kg)	105	**151008**	**151098**	**148007**
	80 - 36	150.00 - 205.00	90.00	60.00	125.00	4.00 (kg)	104	**151088**	**151092**	**148009**
	80 - 36	150.00 - 205.00	90.00	60.00	125.00	4.00 (kg)	105	**151008**	**151098**	**148009**

NOTE: Insert holders sold in quantities of 1, and inserts sold separately

B10-M: 12-13 | B10-D: 23 | B10-F | B10-H | B10: VI-VII

Key on B10-D: 1

ⓜ = Metric (mm)

Inserts sold separately

IMPORTANT: Max spindle speed refers to maximum possible speed for an individual boring head and is not a recommended parameter. Refer to page B10-M: 12 for recommended application-specific parameters. Factory technical assistance is available for your specific applications through our Application Engineering department.
email: **engineering.eu@alliedmachine.com**

Twin Cutters Height Displaced Tangential Inserts

Diameter Range: 53.00 mm - 205.00 mm



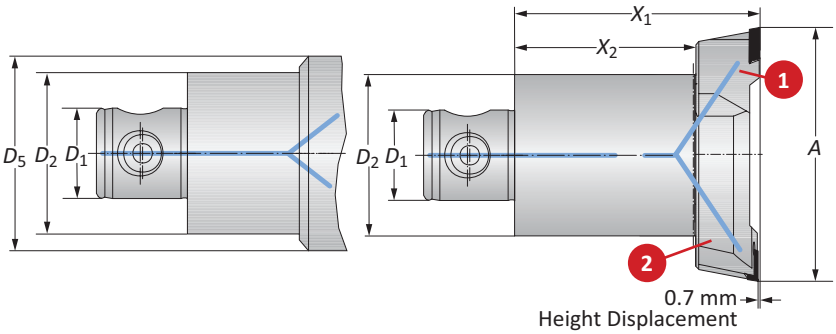

	Connection $D_2 \mid D_1$	Boring Range A	Twin Cutter X_1	X_2	D_5	Weight	Insert Form	Part No. 1. Insert Holder	2. Insert Holder (-0.7 mm)	Serrated Body
	40 - 22	53.00 - 66.00	75.00	55.00	–	0.70 (kg)	04	**151022**	**268009**	**148004**
	50 - 28	65.00 - 83.00	75.00	55.00	–	1.00 (kg)	04	**151032**	**268010**	**148005**
	50 - 28	65.00 - 83.00	75.00	55.00	–	1.00 (kg)	05	**151043**	**268019**	**148005**
ⓜ	63 - 36	82.00 - 103.00	90.00	60.00	–	2.20 (kg)	04	**151034**	**268020**	**148006**
	63 - 36	82.00 - 103.00	90.00	60.00	–	2.20 (kg)	05	**151035**	**268021**	**148006**
	80 - 36	100.00 - 130.00	90.00	60.00	–	3.00 (kg)	05	**151009**	**268022**	**148007**
	80 - 36	125.00 - 155.00	90.00	60.00	–	3.10 (kg)	05	**151010**	**268023**	**148007**
	80 - 36	150.00 - 205.00	90.00	60.00	125.00	4.00 (kg)	05	**151010**	**268023**	**148009**

NOTE: Insert holders sold in quantities of 1, and inserts sold separately

B10-M: 12-13 | B10-D: 23 | B10-F | B10-H | B10: VI-VII
Key on B10-D: 1

ⓜ = Metric (mm)
Inserts sold separately

IMPORTANT: Max spindle speed refers to maximum possible speed for an individual boring head and is not a recommended parameter. Refer to page B10-M: 12 for recommended application-specific parameters. Factory technical assistance is available for your specific applications through our Application Engineering department.
email: **engineering.eu@alliedmachine.com**

Chamfering Tools

Diameter Range: 25 .00 mm - 32.00 mm



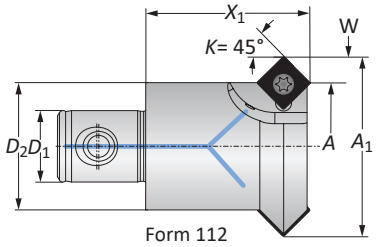

Form 112

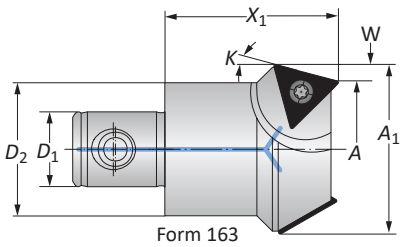

Form 163

	Connection D_2 | D_1	Approach Angle K	Boring Range A	Cutter Diameter A_1	Chamfering Tool X_1	Chamfering Tool W	Weight	Insert Form	Number of Inserts	Part No.
	25 - 14	15°	25.00	33.00	31.00	4.00	0.15 (kg)	163	2	**201087**
	25 - 14	45°	20.00	33.00	31.00	6.50	0.15 (kg)	112	2	**201082**
Ⓜ	32 - 18	15°	32.00	40.00	41.00	4.00	0.20 (kg)	163	2	**201088**
	32 - 18	30°	25.00	41.00	41.00	8.00	0.20 (kg)	163	2	**201089**
	32 - 18	45°	32.00	45.00	41.00	6.50	0.20 (kg)	112	3	**201083**

NOTE: K 45° for front and reverse side chamfering
NOTE: Inserts sold separately

B10-M: 12-13 | B10-D: 23 | B10-F | B10-H | B10: VI-VII

Key on B10-D: 1

Ⓜ = Metric (mm)
Inserts sold separately

IMPORTANT: Max spindle speed refers to maximum possible speed for an individual boring head and is not a recommended parameter. Refer to page B10-M: 12 for recommended application-specific parameters. Factory technical assistance is available for your specific applications through our Application Engineering department.
email: **engineering.eu@alliedmachine.com**

Chamfering Tools

Metric | Diameter Range: 19.00 mm - 71.00 mm

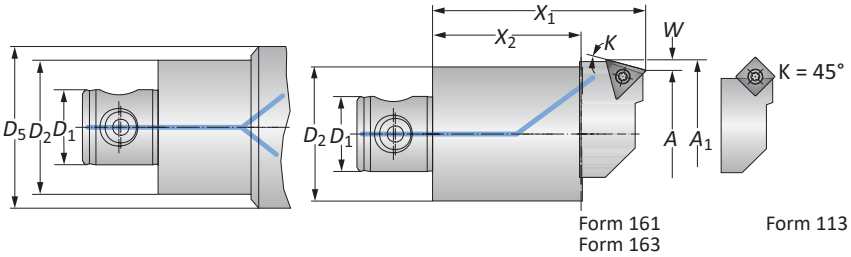

Form 161
Form 163

Form 113



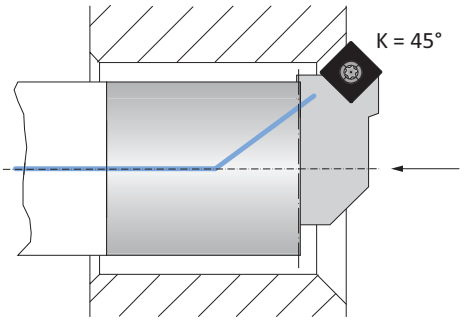

	Connection	Approach Angle	Boring Range	Chamfering Range	Chamfering Tool				Weight (lbs)	Insert Form	Part No.	
	D_2 | D_1	K	A	A_1	X_1	X_2	D_5	W			Insert Holder	Serrated Body
	25 - 14	15°	24.00 - 32.00	29.00 - 37.00	60.00	42.00	–	2.50	0.20 (kg)	161	**201057**	**148001**
	25 - 14	15°	31.00 - 39.00	36.00 - 44.00	60.00	42.00	30.00	2.50	0.20 (kg)	161	**201058**	**148002**
	25 - 14	20°	22.00 - 30.00	29.00 - 37.00	60.00	42.00	–	3.50	0.20 (kg)	161	**201017**	**148001**
	25 - 14	20°	29.00 - 37.00	36.00 - 44.00	60.00	42.00	30.00	3.50	0.20 (kg)	161	**201018**	**148002**
	25 - 14	30°	20.00 - 28.00	29.00 - 37.00	60.00	42.00	–	4.50	0.20 (kg)	161	**201067**	**148001**
	25 - 14	30°	27.00 - 35.00	36.00 - 44.00	60.00	42.00	30.00	4.50	0.20 (kg)	161	**201068**	**148002**
	25 - 14	45°	19.00 - 27.00	33.00 - 41.00	58.00	42.00	–	5.00	0.20 (kg)	161	**201003***	**148001**
	25 - 14	45°	26.00 - 34.00	38.00 - 46.00	58.00	42.00	–	5.00	0.20 (kg)	112	**201004**	**148001**
	25 - 14	45°	31.00 - 39.00	43.00 - 51.00	60.00	42.00	30.00	6.00	0.20 (kg)	112	**201007**	**148002**
	32 - 18	15°	31.00 - 39.00	36.00 - 44.00	60.00	42.00	30.00	2.50	0.20 (kg)	161	**201058**	**148017**
	32 - 18	20°	29.00 - 37.00	36.00 - 44.00	60.00	42.00	30.00	3.50	0.20 (kg)	161	**201018**	**148017**
	32 - 18	30°	27.00 - 35.00	36.00 - 44.00	60.00	42.00	30.00	4.50	0.20 (kg)	161	**201068**	**148017**
(m)	32 - 18	45°	31.00 - 39.00	43.00 - 51.00	60.00	42.00	30.00	6.00	0.20 (kg)	112	**201077**	**148017**
	32 - 18	15°	35.00 - 46.00	43.00 - 54.00	71.00	46.00	36.00	4.00	0.40 (kg)	163	**201059**	**148003**
	32 - 18	20°	33.00 - 44.00	43.00 - 54.00	71.00	46.00	36.00	5.00	0.40 (kg)	163	**201019**	**148003**
	32 - 18	30°	28.00 - 39.00	43.00 - 54.00	71.00	46.00	36.00	7.50	0.40 (kg)	163	**201069**	**148003**
	32 - 18	45°	35.00 - 46.00	50.00 - 61.00	66.00	46.00	36.00	7.50	0.40 (kg)	113	**201008**	**148003**
	40 - 22	15°	35.00 - 46.00	43.00 - 54.00	71.00	46.00	36.00	4.00	0.40 (kg)	163	**201059**	**148018**
	40 - 22	20°	33.00 - 44.00	43.00 - 54.00	71.00	46.00	36.00	5.00	0.40 (kg)	163	**201019**	**148018**
	40 - 22	30°	28.00 - 39.00	43.00 - 54.00	71.00	46.00	36.00	7.50	0.40 (kg)	163	**201069**	**148018**
	40 - 22	45°	35.00 - 46.00	50.00 - 61.00	66.00	46.00	36.00	7.50	0.40 (kg)	113	**201008**	**148018**
	40 - 22	15°	37.00 - 50.00	45.00 - 58.00	80.00	55.00	–	4.00	0.70 (kg)	163	**201060**	**148004**
	40 - 22	20°	37.00 - 50.00	47.00 - 60.00	80.00	55.00	–	5.00	0.70 (kg)	163	**201020**	**148004**
	40 - 22	30°	37.00 - 50.00	52.00 - 65.00	80.00	55.00	–	7.50	0.70 (kg)	163	**201070**	**148004**
	40 - 22	45°	43.00 - 56.00	58.00 - 71.00	80.00	55.00	–	7.50	0.70 (kg)	113	**201009**	**148004**

*Insert holder cannot be used for reverse machining.
NOTE: K 45° for front and reverse side chamfering above Ø 31.00 mm
NOTE: Insert holders and inserts sold separately

B10-M: 12-13 | B10-D: 23 | B10-F | B10-H | B10: VI-VII
Key on B10-D: 1

(m) = Metric (mm)
Inserts sold separately

IMPORTANT: Max spindle speed refers to maximum possible speed for an individual boring head and is not a recommended parameter. Refer to page B10-M: 12 for recommended application-specific parameters. Factory technical assistance is available for your specific applications through our Application Engineering department.
email: **engineering.eu@alliedmachine.com**

Chamfering Tools

Diameter Range: 50.00 mm - 216.00 mm

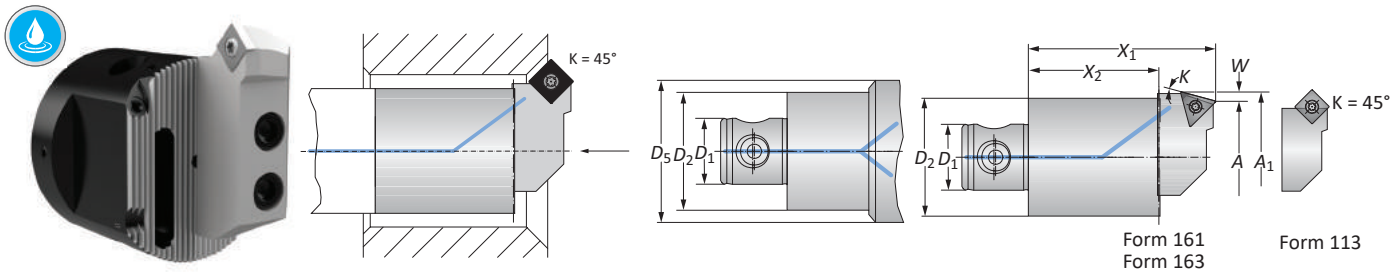

	Connection	Approach Angle	Boring Range	Chamfering Range	Chamfering Tool				Weight	Insert Form	Part No.	
	D_2 | D_1	K	A	A_1	X_1	X_2	D_5	W			Insert Holder	Serrated Body
	50 - 28	15°	50.00 - 68.00	58.00 - 76.00	80.00	55.00	–	4.00	1.00 (kg)	163	**201061**	**148005**
	50 - 28	20°	50.00 - 68.00	60.00 - 78.00	80.00	55.00	–	5.00	1.00 (kg)	163	**201021**	**148005**
	50 - 28	30°	50.00 - 68.00	65.00 - 83.00	80.00	55.00	–	7.50	1.00 (kg)	163	**201071**	**148005**
	50 - 28	45°	55.00 - 73.00	70.00 - 88.00	80.00	55.00	–	7.50	1.00 (kg)	113	**201010**	**148005**
	63 - 36	15°	68.00 - 89.00	76.00 - 97.00	90.00	60.00	–	4.00	1.90 (kg)	163	**201062**	**148006**
	63 - 36	20°	68.00 - 89.00	78.00 - 99.00	90.00	60.00	–	5.00	1.90 (kg)	163	**201022**	**148006**
	63 - 36	30°	68.00 - 89.00	83.00 - 104.00	90.00	60.00	–	7.50	1.90 (kg)	163	**201072**	**148006**
	63 - 36	45°	72.00 - 93.00	87.00 - 108.00	90.00	60.00	–	7.50	1.90 (kg)	113	**201011**	**148006**
	80 - 36	15°	89.00 - 119.00	97.00 - 127.00	90.00	60.00	–	4.00	2.60 (kg)	163	**201063**	**148007**
Ⓜ	80 - 36	15°	119.00 - 149.00	127.00 - 159.00	90.00	60.00	–	4.00	2.70 (kg)	163	**201064**	**148007**
	80 - 36	15°	144.00 - 199.00	152.00 - 207.00	90.00	60.00	125.00	4.00	3.60 (kg)	163	**201064**	**148009**
	80 - 36	20°	89.00 - 119.00	99.00 - 129.00	90.00	60.00	–	5.00	2.60 (kg)	163	**201023**	**148007**
	80 - 36	20°	119.00 - 149.00	129.00 - 159.00	90.00	60.00	–	5.00	2.70 (kg)	163	**201024**	**148007**
	80 - 36	20°	144.00 - 199.00	154.00 - 209.00	90.00	60.00	125.00	5.00	3.60 (kg)	163	**201024**	**148009**
	80 - 36	30°	89.00 - 119.00	104.00 - 134.00	90.00	60.00	–	7.50	2.60 (kg)	163	**201073**	**148007**
	80 - 36	30°	119.00 - 149.00	134.00 - 164.00	90.00	60.00	–	7.50	2.70 (kg)	163	**201074**	**148007**
	80 - 36	30°	144.00 - 199.00	159.00 - 214.00	90.00	60.00	125.00	7.50	3.60 (kg)	163	**201074**	**148009**
	80 - 36	45°	92.00 - 122.00	107.00 - 137.00	90.00	60.00	–	7.50	2.60 (kg)	113	**201012**	**148007**
	80 - 36	45°	121.00 - 151.00	136.00 - 166.00	90.00	60.00	–	7.50	2.70 (kg)	113	**201013**	**148007**
	80 - 36	45°	146.00 - 201.00	161.00 - 216.00	90.00	60.00	125.00	7.50	3.60 (kg)	113	**201013**	**148009**

NOTE: K 45° = front and reverse side chamfering
NOTE: Insert holders and inserts sold separately

B10-M: 12-13 | B10-D: 23 | B10-F | B10-H | B10: VI-VII
Key on B10-D: 1

Ⓜ = Metric (mm)
Inserts sold separately

IMPORTANT: Max spindle speed refers to maximum possible speed for an individual boring head and is not a recommended parameter. Refer to page B10-M: 12 for recommended application-specific parameters. Factory technical assistance is available for your specific applications through our Application Engineering department.
email: **engineering.eu@alliedmachine.com**

Grooving Tools for Circular Milling

Diameter Range: Ø >20.00 mm

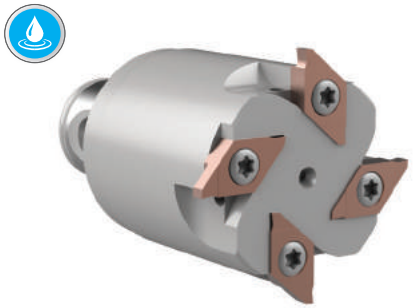

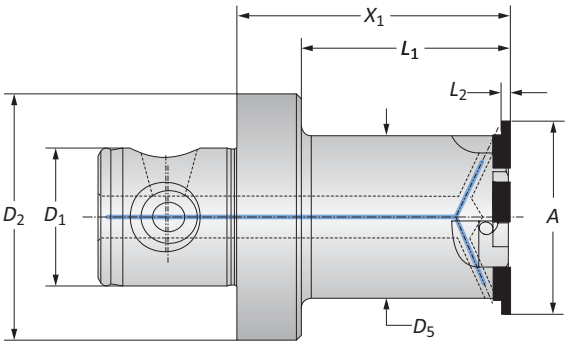

	Connection	Cutter Diameter	Grooving Tool			Groove Width	Groove Depth	Number of Inserts	Weight	Insert Form	Part No.
	D_2 | D_1	A	X_1	L_1	D_5	L_2					
	50 - 28	20.00	55.00	40.00	17.00	max 2.37	max 1.50	2	0.40 (kg)	89	**143051**
	50 - 28	20.00	95.00	82.00	17.00	max 2.37	max 1.50	2	0.40 (kg)	89	**143052**
	50 - 28	39.00	55.00	42.00	33.00	max 3.37	max 2.50	4	0.60 (kg)	90	**143053**
m	32 - 18	39.00	40.00	40.00	33.00	max 3.37	max 2.50	4	0.30 (kg)	90	**143054**
	50 - 28	49.00	55.00	40.00	43.00	max 3.37	max 2.50	5	0.70 (kg)	90	**143055**
	40 - 22	49.00	40.00	40.00	43.00	max 3.37	max 2.50	5	0.50 (kg)	90	**143056**
	50 - 28	63.00	40.00	40.00	53.00	max 5.87	max 4.70	6	0.70 (kg)	91	**143057**
	63 - 36	79.00	40.00	40.00	69.00	max 5.87	max 4.70	8	1.20 (kg)	91	**143058**

NOTE: Different lengths available upon request.
NOTE: Insert holders and inserts sold separately

B10-M: 12-13 | B10-D: 23 | B10-F | B10-H | B10: VI-VII
Key on B10-D: 1

m = Metric (mm)
Inserts sold separately

IMPORTANT: Max spindle speed refers to maximum possible speed for an individual boring head and is not a recommended parameter. Refer to page B10-M: 12 for recommended application-specific parameters. Factory technical assistance is available for your specific applications through our Application Engineering department.
email: **engineering.eu@alliedmachine.com**

Axial Grooving Tools

Diameter Range: 20.00 mm - 205.00 mm



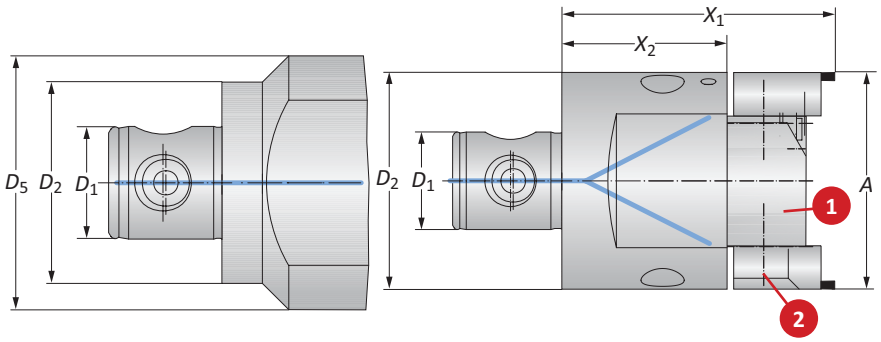

	Connection	Boring Range	Grooving Tool				Part No.			
	$D_2 \mid D_1$	A	X_1	X_2	D_5	Weight	1. Support Block	Insert Form	2. Insert Holder	Serrated Tool Body
	50 - 28	20.00 - 58.00	83.00	55.00	63.00	1.30 (kg)	–	**304**	**226030**	**148010**
Ⓜ	80 - 36	57.00 - 84.00	100.00	60.00	–	2.60 (kg)	**226011**	**304**	**226031**	**148007**
	80 - 36	82.00 - 155.00	100.00	60.00	125.00	3.70 (kg)	**226012**	**304**	**226031**	**148009**
	80 - 36	153.00 - 205.00	100.00	60.00	125.00	3.70 (kg)	**226013**	**304**	**226031**	**148009**

NOTE: Groove width is 0.039" - 0.276" (1.00 mm - 7.00 mm). (With Twin Cutter and diameter offset up to 12.00 mm is possible.) | Groove depth is 0.039" - 0.236" (1.00 mm - 6.00 mm)
NOTE: Support block with machining diameters smaller than 4.842" (123.00 mm) can only be secured with one screw
NOTE: Insert holders, support blocks, and inserts sold separately

Examples of recessing replaceable inserts:

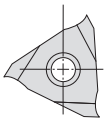
Other insert types available upon request.


Two-Sided Cutting Form

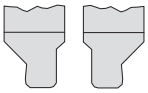
Single-Sided Cutting Form (Right / Left)


Two-Sided Angle Cutting


With Corner Radius


Full Radius

B10-M: 12-13 | B10-D: 23 | B10-F | B10-H | B10: VI-VII

Key on B10-D: 1

Ⓜ = Metric (mm)
Inserts sold separately

IMPORTANT: Max spindle speed refers to maximum possible speed for an individual boring head and is not a recommended parameter. Refer to page B10-M: 12 for recommended application-specific parameters. Factory technical assistance is available for your specific applications through our Application Engineering department.
email: **engineering.eu@alliedmachine.com**

Reverse Machining Tools

Diameter Range: 29.00 mm - 245.00 mm



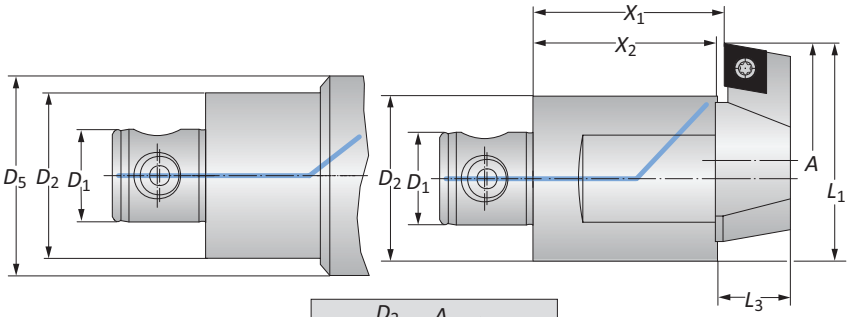

$$L_1 = \frac{D_2}{2} + \frac{A}{2} + 0.5 \text{ mm}$$

	Connection	Boring Range	Reverse Machining						Part No.	
	$D_2 \mid D_1$	A	X_1	X_2	L_3	D_5	Weight	Insert Form	Insert Holder	Serrated Tool Body
	25 - 14	29.00 - 37.00	40.00	39.00	14.00	–	0.20 (kg)	103	**251001**	**148011**
	25 - 14	34.00 - 42.00	40.00	39.00	14.00	–	0.20 (kg)	103	**251002**	**148011**
	25 - 14	36.00 - 44.00	40.00	39.00	14.00	–	0.20 (kg)	103	**251002**	**148012**
	25 - 14	44.00 - 52.00	40.00	39.00	18.00	–	0.20 (kg)	104	**251003**	**148012**
	32 - 18	43.00 - 54.00	40.00	39.00	18.00	–	0.30 (kg)	104	**251003**	**148013**
	32 - 18	55.00 - 66.00	40.00	39.00	18.00	–	0.40 (kg)	104	**251004**	**148013**
	40 - 22	53.00 - 72.00	40.00	39.00	18.00	–	0.50 (kg)	104	**251004**	**148014**
Ⓜ	40 - 22	66.00 - 85.00	40.00	39.00	18.00	–	0.50 (kg)	104	**251005**	**148014**
	50 - 28	70.00 - 95.00	56.00	55.00	22.00	–	1.10 (kg)	104	**251006**	**148015**
	50 - 28	92.00 - 117.00	56.00	55.00	22.00	–	1.30 (kg)	104	**251007**	**148015**
	63 - 36	92.00 - 122.00	56.00	55.00	22.00	–	1.70 (kg)	104	**251007**	**148016**
	80 - 36	120.00 - 150.00	62.00	60.00	26.00	–	2.70 (kg)	104	**251008**	**148007**
	80 - 36	166.00 - 196.00	62.00	60.00	26.00	–	2.90 (kg)	104	**251009**	**148007**
	80 - 36	145.00 - 200.00	62.00	60.00	26.00	125.00	3.60 (kg)	104	**251008**	**148009**
	80 - 36	190.00 - 245.00	62.00	60.00	26.00	125.00	3.70 (kg)	104	**251009**	**148009**

NOTE: Only use inserts with chip grooves all around
NOTE: Insert holders and inserts sold separately

B10-M: 12-13 | B10-D: 23 | B10-F | B10-H | B10: VI-VII
Key on B10-D: 1

Ⓜ = Metric (mm)
Inserts sold separately

IMPORTANT: Max spindle speed refers to maximum possible speed for an individual boring head and is not a recommended parameter. Refer to page B10-M: 12 for recommended application-specific parameters. Factory technical assistance is available for your specific applications through our Application Engineering department.
email: **engineering.eu@alliedmachine.com**

VolCut Insert Holders

Diameter Range: 65.00 mm - 3255.00 mm





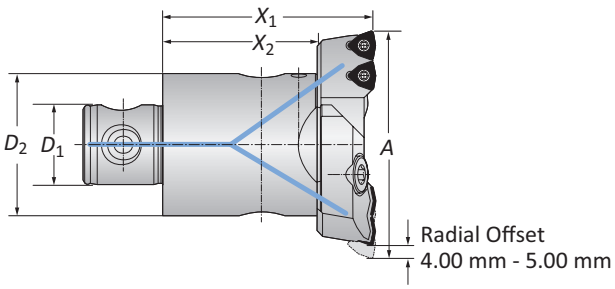

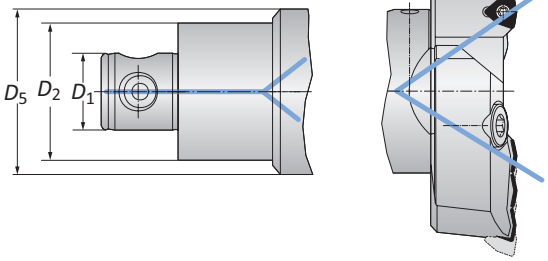

Serrated Bodies with VolCut Insert Holders

Connection $D_2 \mid D_1$	Boring Range A	Boring Range A_{min}**	Serrated Body X_1	Serrated Body X_2	Serrated Body D_5	Weight	Number of Inserts	Insert Form	Part No. VolCut Insert Holder	Part No. Serrated Body
50 - 28	65.00 - 83.00	65.00 - 70.00	74.00	55.00	–	1.10 (kg)	2	464	**151019**	**148005**
63 - 36	82.00 - 103.00	82.00 - 87.00	89.00	60.00	–	2.20 (kg)	3	464	**151039**	**148006**
80 - 36	100.00 - 130.00	100.00 - 105.00	89.00	60.00	–	3.00 (kg)	3	464	**151059**	**148007**
80 - 36	125.00 - 155.00	125.00 - 130.00	89.00	60.00	–	3.20 (kg)	3	464	**151069**	**148007**
80 - 36	150.00 - 205.00	150.00 - 155.00	89.00	60.00	125.00	5.10 (kg)	3	464	**151069**	**148009**
⚠ D60	200.00 - 3255.00	–	–	–	–	–	3	464	**149030**	*

NOTE: Inserts, insert holders, and serrated body are sold separately.
*For large diameter serrated slides, please contact Application Eng. on enquiries.eu@alliedmachine.com and see section B10-G in the Wohlhaupter® MultiBore® System Tools catalogue.
**For smaller diameters, both cartridges must be set to the same diameter. Only the outside insert on each cartridge can be engaged in the material.

IC Inserts

Carbide Grade	Geometry	Part No. AM300®	Part No. WSP-Screw
P35 (C5)	Standard	**OP-05T308-P**	IS-10-1
K35 (C1)	Standard	**OP-05T308-1P**	IS-10-1
K20 (C2)	Standard	**OP-05T308-2P**	IS-10-1
P35 (C5)	High Rake	**OP-05T308-PHR**	IS-10-1

NOTE: See section A70 in the Allied Master Product Catalogue for recommended cutting data, cutting materials, and geometries.

A70: 16 - 19
Key on B10-D: 1
B10: VI-VII

Ⓜ = Metric (mm)

⚠ WARNING **For large diameter boring with VolCut insert holders please:**
- Contact our Application Engineering department before purchasing (*email:* **engineering.eu@alliedmachine.com**)
- Refer to section B10-G in the Wohlhaupter® MultiBore® System Tools catalogue.

VolCut Technical Information

Setup Instructions | Minimum Pilot Calculation



Step 1:
Loosen the mounting screws on both cartridges.

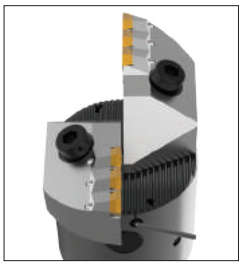

Step 2:
Set one cartridge to the finish diameter by tightening the adjustment screw against the adjustment pin.



Step 3:
Tighten the mounting screws on the cartridge to 15-19 Nm.

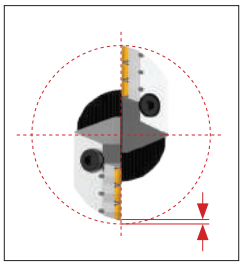

Step 4:
Set the opposing cartridge with 4 mm - 5 mm radial offset inward by tightening the adjustment screw against the adjustment pin (optimum situation for each insert to remove equal material).

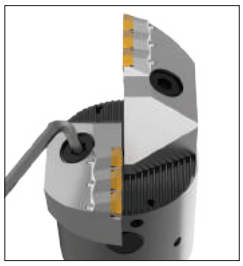

Step 5:
Tighten the mounting screws on the cartridge to 15-19 Nm.

Note: Drilling systems with OP inserts are used as single cutters. The replaceable inserts are mounted offset in diameter. Please review the assembly instructions.

Minimum Pilot Calculation

Calculation: Finish Diameter - Opening Range = Minimum Pilot Hole Diameter

Insert Holder	Diameter Range	Opening Range
151019	65.00 mm - 70.00 mm	15.24 mm
	70.00 mm - 83.00 mm	47.75 mm
151039	82.00 mm - 87.00 mm	15.24 mm
	87.00 mm - 103.00 mm	68.07 mm
151059	100.00 mm - 105.00 mm	15.24 mm
	105.00 mm - 130.00 mm	68.07 mm
151069	125.00 mm - 130.00 mm	15.24 mm
	130.00 mm - 205.00 mm	68.07 mm
149030	200.00 mm - 3255.00 mm	68.07 mm

Example: To open an existing hole to 114.30 mm diameter, a 151059 insert holder would be used with a 148007 serrated tool body, and the minimum pilot diameter would be 114.30 mm - 68.07 mm = 46.23 mm.

Accessories

Clamping Elements | Axial Grooving Accessories

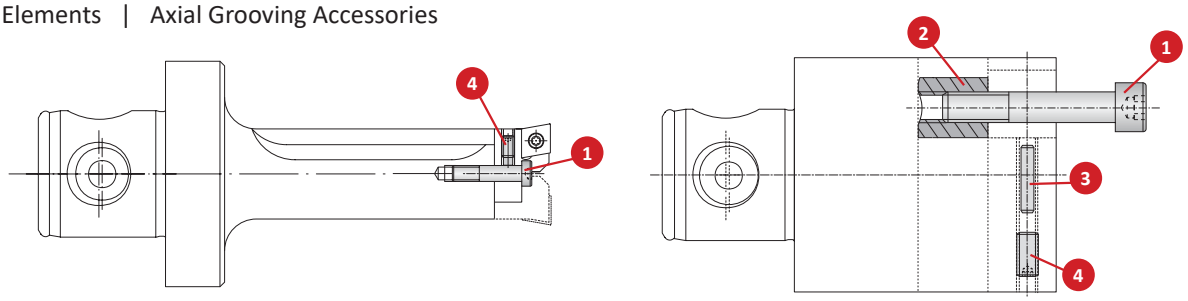

Clamping Elements

Connection	Serrated Tool Body	Part No. 1. Cap Screw	Service Key	2. Clamping Nut	3. Adjustment Pin	4. Thread Pin	Service Key
25 - 14	148001	**140108**	**s4 / B**	**140114**	–	**115280**	**s2.5 / A**
25 - 14	148002	**148110**	**s5 / B**	**115667**	–	**126157**	**s2.5 / A**
25 - 14	148011	**148110**	**s5 / B**	**148113**	–	**117148**	**s2.5 / A**
25 - 14	148012	**148110**	**s5 / B**	**115666**	–	**117148**	**s2.5 / A**
32 - 18	148003	**140110**	**s5 / B**	**115667**	–	**126157**	**s2.5 / A**
32 - 18	148013	**148110**	**s5 / B**	**148114**	–	**115192**	**s2.5 / A**
32 - 18	148017	**148110**	**s5 / B**	**115667**	–	**126157**	**s2.5 / A**
40 - 22	148004	**140110**	**s5 / B**	**140116**	–	**115407**	**s2.5 / A**
40 - 22	148014	**148110**	**s5 / B**	**148114**	–	**126157**	**s2.5 / A**
40 - 22	148018	**140110**	**s5 / B**	**115667**	–	**126157**	**s2.5 / A**
50 - 28	148005	**140111**	**s6 / B**	**140117**	–	**140121**	**s2.5 / A**
50 - 28	148010	**140111**	**s6 / B**	**140117**	–	**140121**	**s2.5 / A**
50 - 28	148015	**140112**	**s6 / B**	**140117**	–	**215111**	**s2.5 / A**
50 - 28	235001	**415111**	**T25 / B**	–	–	**215346**	**s1.5 / A**
50 - 28	235002	**415112**	**T25 / B**	–	–	**215346**	**s1.5 / A**
50 - 28	235003	**415113**	**T25 / B**	–	–	**215346**	**s1.5 / A**
50 - 28	148021	**140108**	**s4 / B**	**140114**	–	**115280**	**s2.5 / A**
50 - 28	148022	**140110**	**s5 / B**	**115667**	–	**126157**	**s2.5 / A**
50 - 28	148023	**140110**	**s5 / B**	**115667**	–	**126157**	**s2.5 / A**
50 - 28	148024	**140110**	**s5 / B**	**140116**	–	**115407**	**s2.5 / A**
63 - 36	148006	**140112**	**s6 / B**	**140118**	–	**140121**	**s2.5 / A**
63 - 36	148016	**140112**	**s6 / B**	**140117**	–	**116550**	**s2.5 / A**
63 - 36	235011	**415111**	**T25 / B**	–	–	**215346**	**s1.5 / A**
63 - 36	235012	**415112**	**T25 / B**	–	–	**215346**	**s1.5 / A**
63 - 36	235013	**415113**	**T25 / B**	–	–	**215346**	**s1.5 / A**
80 - 36	148007	**115730**	**s6 / B**	**140119**	–	**116550**	**s2.5 / A**
80 - 36	148009	**115730**	**s6 / B**	**140119**	**140120**	**115519**	**s2.5 / A**
Ø 18	235021	**415111**	**T25 / B**	–	–	**215346**	**s1.5 / A**
Ø 20	235022	**415112**	**T25 / B**	–	–	**215346**	**s1.5 / A**
Ø 23	235023	**415113**	**T25 / B**	–	–	**215346**	**s1.5 / A**

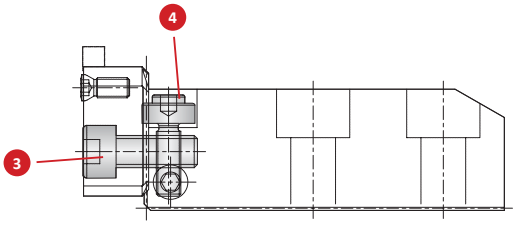

Axial Grooving Accessories

Support Base	3. Cap Screw Part No.	Service Key	4. Axial Adjustment Screw Part No.	Service Key
226011	**023182**	s6 / B	**215374**	s4 / B
226012	**023182**	s6 / B	**215374**	s4 / B
226013	**023182**	s6 / B	**215374**	s4 / B

B10-M: 12-13 B10: VI-VII

Key on B10-D: 1

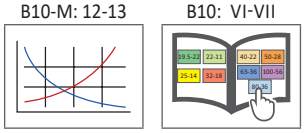

Ⓜ = Metric (mm)

SECTION

B10-E

Intermediate Modules

Wohlhaupter® Intermediate Modules

NOVI[TECH®] | Reducers | Extensions



Increase Tool Stability with Intermediate Modules

- Allow for expanded use of existing components
- Add flexibility to setups
- Reduce need for specials and their associated cost and lead time
- Each component individually balanced

Your safety and the safety of others is very important. This catalogue contains important safety messages. Always read and follow all safety precautions.



This triangle is a safety hazard symbol. It alerts you to potential safety hazards that can cause tool failure and serious injury.

When you see this symbol in the catalogue, look for a related safety message that may be near this triangle or referred to in the nearby text.

There are safety signal words also used in the catalogue. Safety messages follow these words.

⚠ WARNING

WARNING (shown above) means that failure to follow the precautions in this message could result in tool failure and serious injury.

NOTICE means that failure to follow the precautions in this message could result in damage to the tool or machine but not result in personal injury.

NOTE and **IMPORTANT** are also used. These are important that you read and follow but are not safety-related.

Visit www.alliedmachine.com for the most up-to-date information and procedures.

Applicable Industries

Aerospace | Agriculture | Automotive | Firearms | General Machining | Oil & Gas | Renewable Energy

Reference Icons
The following icons will appear throughout the catalogue to help you navigate between products.

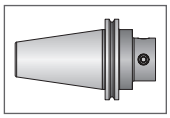

Shanks
A variety of shanks for different machines

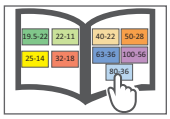

MVS Connection Color Guide
Detailed instructions and information regarding the MVS connection(s)

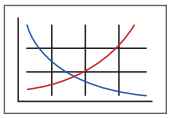

Recommended Cutting Data
Speed and feed recommendations for optimum and safe boring

Through Coolant Option
Indicates that the product is through coolant

Intermediate Modules Table of Contents

Introduction
Product Overview . . . . . 2 - 3

NOVI$^{TECH®}$ Vibration Damping Modules . . . . . 4 - 5

248 Adapters . . . . . 6 - 7

Reducers . . . . . 8 - 11

Extensions . . . . . 12 - 13

Intermediate Modules Product Overview



Intermediate MODULES

Reducers

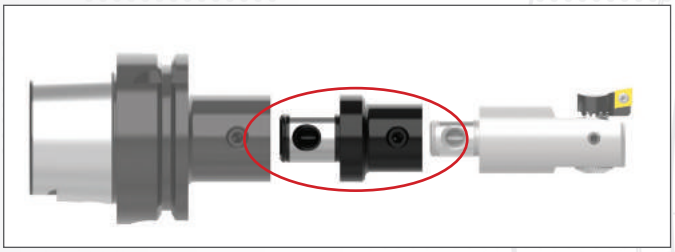

Features:

- Improves rigidity by stepping-down to smaller MVS connection sizes
- Connects quickly and easily with the MVS connection
- Accommodates smaller diameter applications

Extensions

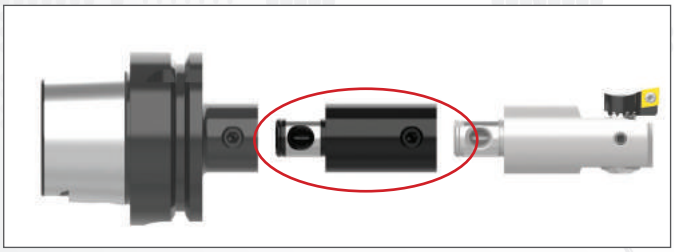

Features:

- Used to increase bore depth
- Connects quickly and easily with the MVS connection
- Aluminium components available to reduce stress on the spindle

WOHLHAUPTER® FINE BORING HEAD with NOVI$^{TECH®}$

Are you looking for more from your tooling?



After facing problems with chatter and chipping inserts, our customer, who machines fueling machine head rotors from ASTM A276 - 304L in the nuclear power industry, sought a better solution to their machining process.

The customer turned to Allied for help finding a new solution. Once the causes of insert failure and chatter were identified, our experienced team was able to create the best assembly suitable for the application. Using **Wohlhaupter's analogue balanced fine boring head** paired with the **NOVI^{TECH} vibration dampening module,** they were able to eliminate the issues our customers were facing.

With the previous tooling, the customer achieved only 12 minutes of tool life, but with Allied's Wohlhaupter assembly, they achieved more than four times the life for 65 minutes!

Allied's Wohlhaupter assembly improved the machining process by making it more consistent and saved the customer money by reducing the cost per hole. If you are looking to save time and money, ***give us a call, and we will help you find the right solution.***

Product: Wohlhaupter analogue balanced fine boring head with NOVI^{TECH}

Objectives: (1) Decrease cycle time
(2) Improve process

Industry: Renewable energy/energy

Part: Nuclear fueling machine head rotor

Material: ASTM A276-304L

Hole Ø: 120 mm

Hole Depth: 1040 mm

Measure	Competitor Boring Head	Wohlhaupter Fine Boring Head with NOVI^{TECH}
RPM	106	372
Speed Rate	40 M/min	140 M/min
Feed Rate	0.076 mm/rev	0.16 mm/rev
Penetration Rate	9 mm/min	60 mm/min
Cycle Time	2 hr 10 min	17 min
Tool Life	12 min	65 min
Wohlhaupter offered *93.32%* cost per hole savings over the competitor tooling.		

- Analogue balanced fine boring head
- Boring insert ***Item No. 297994WHC111***
- NOVI^{TECH} vibration dampening intermediate module ***Item No. 519004***

86.92% cycle time reduction



The Wohlhaupter boring head with the NOVI^{TECH} vibration dampening module provided:

- ✓ Increased penetration rate
- ✓ Decreased cycle time
- ✓ Increased tool life
- ✓ Decreased cost per hole

NOVI[TECH®] Vibration Dampening Intermediate Modules Overview

NOVITECH®
Vibration Damping Intermediate Module

THE **DEEP** HOLE **10xD BORING *SOLUTION*** YOU'VE BEEN LOOKING FOR

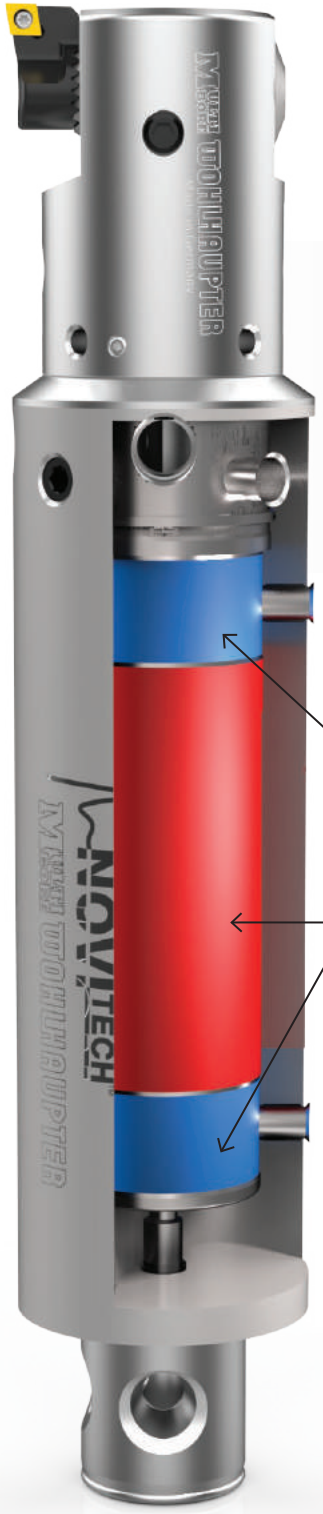

OUR ***SOLUTION***

- Machine up to **10xD**
- Connect quickly and easily with the **MVS connection**
- Utilise existing **Wohlhaupter® components**
- **Increase** your productivity, surface quality, and process reliability
- **Increase** your tool and spindle life

YOUR ***ADVANTAGE***

Dampening module with viscoelastic bearing

Absorber mass

THE SURFACE QUALITY TELLS IT ALL

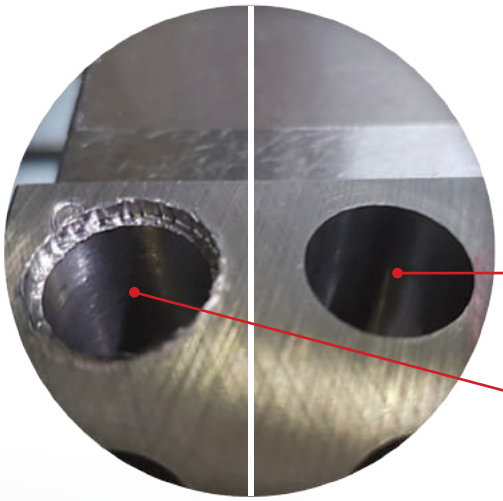

When our customer was machining alloy steel to 9xD, the NOVI[TECH] provided reliable machining, which achieved high surface quality (Ra = 1 µm).

Wohlhaupter NOVI[TECH] with VarioBore precision boring head

Standard tool construction with steel extension

NOVI[TECH®] Vibration Damping Intermediate Modules

Machining Diameter: 50.00 mm - 205.00 mm



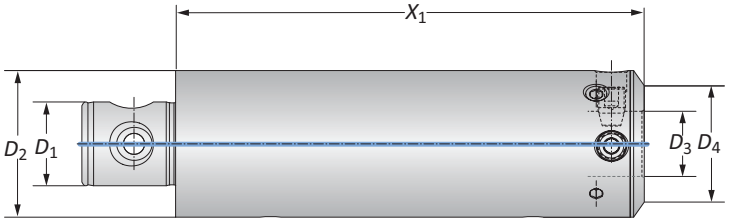



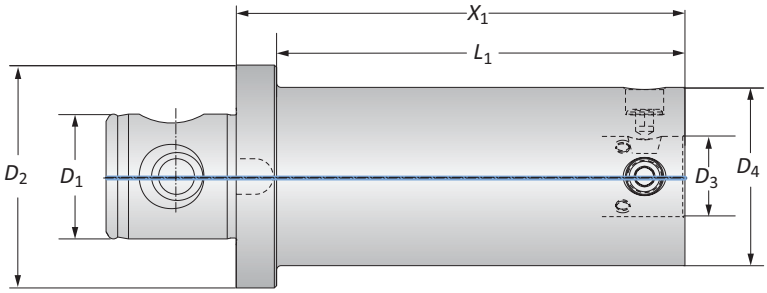

MVS Connection		NOVI[TECH]			
D_2 | D_1	D_4 | D_3	X_1	L_1	Weight	Part No.
50 - 28*	40 - 22	200.00	–	2.80 (kg)	**519002**
63 - 36	50 - 28	200.00	–	5.70 (kg)	**519003**
80 - 36	63 - 36	200.00	–	7.50 (kg)	**519004**
80 - 36	80 - 36	200.00	–	7.50 (kg)	**519005**
100 - 56	80 - 36	200.00	182.00	9.90 (kg)	**519006**

*D_2 =49.50 mm

B10-M: 12-13 | B10-F | B10: VI-VII

Key on B10-E: 1

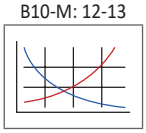

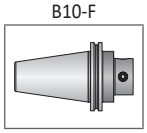

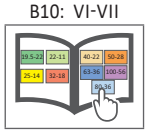

Ⓜ = Metric (mm)

IMPORTANT: Max spindle speed refers to maximum possible speed for an individual boring head and is not a recommended parameter. Refer to page B10-M: 12 for recommended application-specific parameters. Factory technical assistance is available for your specific applications through our Application Engineering department.
email: **engineering.eu@alliedmachine.com**

⚠ WARNING **Exceeding weight capacity for machine tool spindle and tool changer can cause machine damage and/or serious injury. To prevent:**
-Consult machine tool builder for machine's weight limitations.
-Refer to example on page B10-M: 11 for calculating tool assembly weight
Factory technical assistance is also available for specific applications through our Application Engineering department. *email:* **engineering.eu@alliedmachine.com**

⚠ WARNING **Tool failure can cause serious injury. To prevent:**
-Do not exceed recommended 10xD length-to-diameter ratio or exceed 4 total components (including shank)
-When using Alu-Line® components, do not exceed recommended 5xD length-to-diameter ratio
-When using tool steel components, do not exceed recommended 6xD length-to-diameter ratio
-When using heavy metal components, do not exceed recommended 8xD length-to-diameter ratio
-When using a carbide shank, do not exceed recommended 9xD length-to-diameter ratio
-When using a NOVI[TECH®] module, do not exceed recommended 10xD length-to-diameter ratio
-Refer to examples on pages B10-M: 8-10 for calculating length-to-diameter ratio
Factory technical assistance is available for your specific applications through our Application Engineering department. *email:* **engineering.eu@alliedmachine.com**

248 Adapters

Adapters | Balanced Adapters



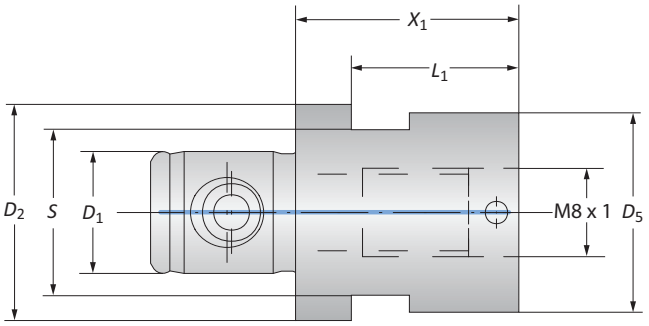

Adapters

	MVS Connection D_2 | D_1	Boring Connection	Adapter X_1	L_1	S	D_5	Weight	Service Key	Part No.
ⓜ	19.5 - 11	M8 x 1	20.00	15.00	15/P	18.00	0.05 (kg)	15 S / P	**219168**
	23 - 11	M8 x 1	20.00	–	19/P	23.00	0.07 (kg)	19 S / P	**219169**



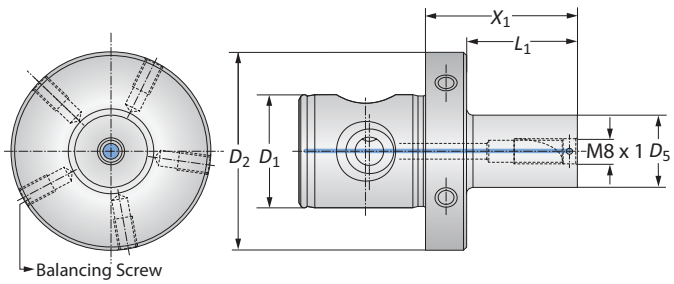

Balanced Adapters

	MVS Connection D_2 | D_1	Boring Connection	Adapter X_1	L_1	D_5	Weight	Balancing Screw	Part No.
	50 - 28	M8 x 1	32.00	19.00	15.00	0.35 (kg)	M6 x 1 x 10	**219185**
ⓜ	50 - 28	M8 x 1	48.00	35.00	18.00	0.40 (kg)	M6 x 1 x 10	**219176**
	50 - 28	M8 x 1	48.00	35.00	23.00	0.45 (kg)	M6 x 1 x 10	**219177**

NOTE: Balance refers to a specific residual imbalance of ≤ 10 g mm/kg

B10-M: 12-13
Key on B10-A: 1
B10-A: 30
B10-A: 34
B10: VI-VII

ⓜ = Metric (mm)

IMPORTANT: Max spindle speed refers to maximum possible speed for an individual boring head and is not a recommended parameter. Refer to page B10-M: 12 for recommended application-specific parameters. Factory technical assistance is available for your specific applications through our Application Engineering department.
email: **engineering.eu@alliedmachine.com**

⚠ WARNING **Exceeding weight capacity for machine tool spindle and tool changer can cause machine damage and/or serious injury. To prevent:**
-Consult machine tool builder for machine's weight limitations.
-Refer to example on page B10-M: 11 for calculating tool assembly weight
Factory technical assistance is also available for specific applications through our Application Engineering department. *email:* **engineering.eu@alliedmachine.com**

⚠ WARNING **Tool failure can cause serious injury. To prevent:**
-Do not exceed recommended 10xD length-to-diameter ratio or exceed 4 total components (including shank)
-When using Alu-Line® components, do not exceed recommended 5xD length-to-diameter ratio
-When using tool steel components, do not exceed recommended 6xD length-to-diameter ratio
-When using heavy metal components, do not exceed recommended 8xD length-to-diameter ratio
-When using a carbide shank, do not exceed recommended 9xD length-to-diameter ratio
-When using a NOVI$^{TECH®}$ module, do not exceed recommended 10xD length-to-diameter ratio
-Refer to examples on pages B10-M: 8-10 for calculating length-to-diameter ratio
Factory technical assistance is available for your specific applications through our Application Engineering department. *email:* **engineering.eu@alliedmachine.com**

248 Adapters

Vibration Reducing Heavy Metal Adapters



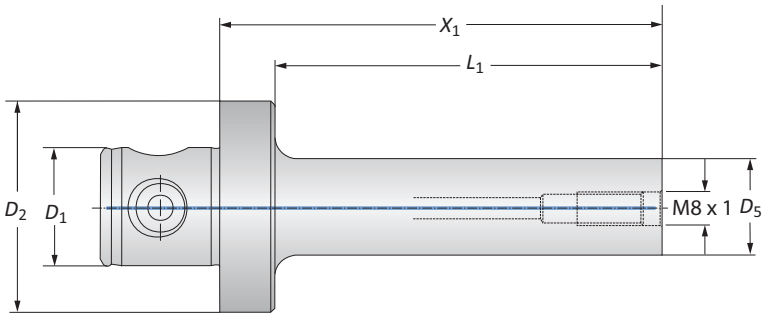

	MVS Connection D_2 | D_1	Boring Connection	Adapter X_1	L_1	D_5	Weight	Part No.
Ⓜ	50 - 28	M8 x 1	68.00	55.00	15.00	0.80 (kg)	**248147**
Ⓜ	50 - 28	M8 x 1	84.00	71.00	19.00	1.00 (kg)	**248148**
Ⓜ	50 - 28	M8 x 1	104.00	91.00	23.00	1.30 (kg)	**248149**

B10-M: 12-13 | B10-A: 30 | B10-A: 34 | B10: VI-VII

Key on B10-A: 1

Ⓜ = Metric (mm)

IMPORTANT: Max spindle speed refers to maximum possible speed for an individual boring head and is not a recommended parameter. Refer to page B10-M: 12 for recommended application-specific parameters. Factory technical assistance is available for your specific applications through our Application Engineering department.
email: **engineering.eu@alliedmachine.com**

⚠ WARNING **Exceeding weight capacity for machine tool spindle and tool changer can cause machine damage and/or serious injury. To prevent:**
-Consult machine tool builder for machine's weight limitations.
-Refer to example on page B10-M: 11 for calculating tool assembly weight
Factory technical assistance is also available for specific applications through our Application Engineering department. *email:* **engineering.eu@alliedmachine.com**

⚠ WARNING **Tool failure can cause serious injury. To prevent:**
-Do not exceed recommended 10xD length-to-diameter ratio or exceed 4 total components (including shank)
-When using Alu-Line® components, do not exceed recommended 5xD length-to-diameter ratio
-When using tool steel components, do not exceed recommended 6xD length-to-diameter ratio
-When using heavy metal components, do not exceed recommended 8xD length-to-diameter ratio
-When using a carbide shank, do not exceed recommended 9xD length-to-diameter ratio
-When using a NOVI$^{TECH®}$ module, do not exceed recommended 10xD length-to-diameter ratio
-Refer to examples on pages B10-M: 8-10 for calculating length-to-diameter ratio
Factory technical assistance is available for your specific applications through our Application Engineering department. *email:* **engineering.eu@alliedmachine.com**

Reducers

Balanced

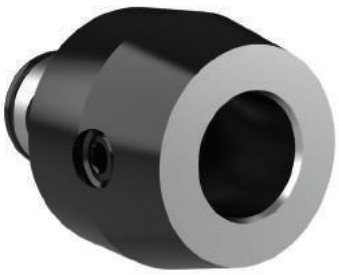

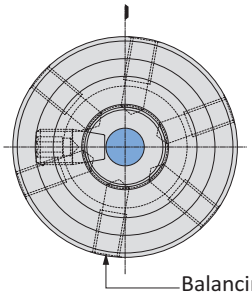

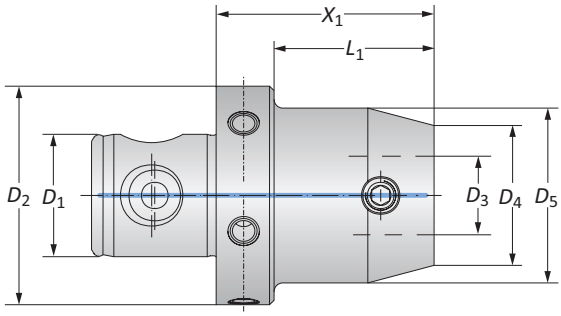

	MVS Connection		Reducer					
	$D_2 \mid D_1$	$D_4 \mid D_3$	X_1	L_1	D_5	Weight	Balancing Screw	Part No.
	25 - 14	19.5 - 11	30.00	21.00	–	0.10 (kg)	–	**219034**
	25 - 14	22 - 11	30.00	21.00	–	0.20 (kg)	–	**219035**
	32 - 18	22 - 11	12.00	0.50	–	0.10 (kg)	–	**219036**
	32 - 18	25 - 14	30.00	21.00	–	0.10 (kg)	–	**219037**
	40 - 22	22 - 11	12.00	0.50	–	0.20 (kg)	–	**219038**
	40 - 22	25 - 14	30.00	21.00	–	0.20 (kg)	–	**219039**
	40 - 22	32 - 18	30.00	–	40.00	0.50 (kg)	–	**219040**
	50 - 28	19.5 - 11	54.00	41.00	–	0.40 (kg)	M6 x 1 x 10	**219051**
	50 - 28	22 - 11	14.00	0.50	–	0.30 (kg)	M6 x 1 x 10	**219041**
	50 - 28	22 - 11	54.00	41.00	–	0.40 (kg)	M6 x 1 x 10	**219052**
ⓜ	50 - 28	25 - 14	14.00	0.50	–	0.30 (kg)	M6 x 1 x 7	**119094**
	50 - 28	25 - 14	59.00	46.00	–	0.40 (kg)	M6 x 1 x 10	**119054**
	50 - 28	25 - 14	59.00	46.00	32.00	0.50 (kg)	M6 x 1 x 10	**119055**
	50 - 28	25 - 14	119.00	106.00	32.00	0.90 (kg)	M6 x 1 x 10	**119010**
	50 - 28	25 - 14	119.00	106.00	36.00	1.00 (kg)	M6 x 1 x 10	**219030***
	50 - 28	32 - 18	49.00	36.00	35.00	0.90 (kg)	M6 x 1 x 10	**219085**
	50 - 28	32 - 18	109.00	96.00	35.00	1.00 (kg)	M6 x 1 x 10	**219086**
	50 - 28	32 - 18	109.00	96.00	40.00	1.10 (kg)	M6 x 1 x 10	**119012**
	50 - 28	32 - 18	109.00	96.00	46.00	1.30 (kg)	M6 x 1 x 10	**219032***
	50 - 28	40 - 22	40.00	27.00	–	0.50 (kg)	M6 x 1 x 10	**219087**
	50 - 28	40 - 22	100.00	87.00	47.00	1.30 (kg)	M6 x 1 x 10	**219088**
	50 - 28	63 - 36	50.00	–	–	1.00 (kg)	M6 x 1 x 10	**119059**

*Reinforced reducer

NOTE: Balance refers to a specific residual imbalance of ≤ 10 g mm/kg

B10-M: 12-13
Key on B10-E: 1

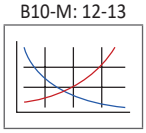

B10-F

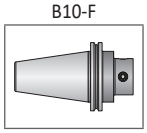

B10: VI-VII

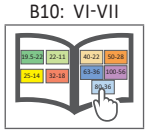

ⓜ = Metric (mm)

IMPORTANT: Max spindle speed refers to maximum possible speed for an individual boring head and is not a recommended parameter. Refer to page B10-M: 12 for recommended application-specific parameters. Factory technical assistance is available for your specific applications through our Application Engineering department.
email: **engineering.eu@alliedmachine.com**

⚠ WARNING **Exceeding weight capacity for machine tool spindle and tool changer can cause machine damage and/or serious injury. To prevent:**
-Consult machine tool builder for machine's weight limitations.
-Refer to example on page B10-M: 11 for calculating tool assembly weight
Factory technical assistance is also available for specific applications through our Application Engineering department. *email:* **engineering.eu@alliedmachine.com**

⚠ WARNING **Tool failure can cause serious injury. To prevent:**
-Do not exceed recommended 10xD length-to-diameter ratio or exceed 4 total components (including shank)
-When using Alu-Line® components, do not exceed recommended 5xD length-to-diameter ratio
-When using tool steel components, do not exceed recommended 6xD length-to-diameter ratio
-When using heavy metal components, do not exceed recommended 8xD length-to-diameter ratio
-When using a carbide shank, do not exceed recommended 9xD length-to-diameter ratio
-When using a NOVI$^{TECH®}$ module, do not exceed recommended 10xD length-to-diameter ratio
-Refer to examples on pages B10-M: 8-10 for calculating length-to-diameter ratio
Factory technical assistance is available for your specific applications through our Application Engineering department. *email:* **engineering.eu@alliedmachine.com**

Reducers

Balanced

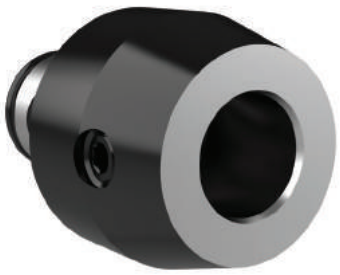

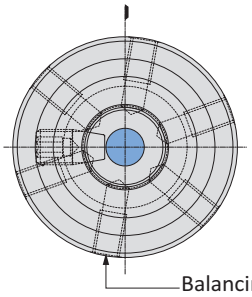

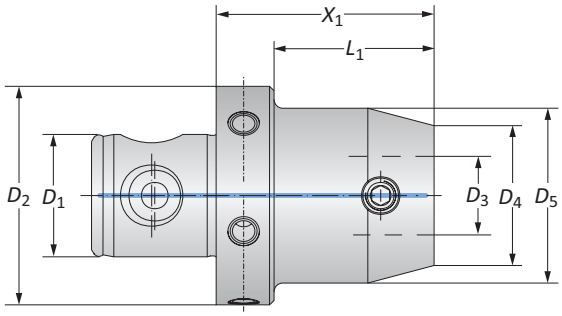

	MVS Connection		Reducer					
	$D_2 \mid D_1$	$D_4 \mid D_3$	X_1	L_1	D_5	Weight	Balancing Screw	Part No.
	63 - 36	19.5 - 11	54.00	41.00	–	0.60 (kg)	M6 x 1 x 10	**219053**
	63 - 36	22 - 11	14.00	0.50	–	0.60 (kg)	M6 x 1 x 10	**219042**
	63 - 36	22 - 11	54.00	41.00	–	0.70 (kg)	M6 x 1 x 10	**219054**
	63 - 36	25 - 14	14.00	0.50	–	0.60 (kg)	M6 x 1 x 10	**119095**
	63 - 36	25 - 14	59.00	46.00	–	0.70 (kg)	M6 x 1 x 10	**119060**
	63 - 36	25 - 14	59.00	46.00	32.00	0.80 (kg)	M6 x 1 x 10	**119061**
	63 - 36	25 - 14	119.00	106.00	32.00	1.10 (kg)	M6 x 1 x 15	**119019**
	63 - 36	25 - 14	119.00	106.00	36.00	1.30 (kg)	M6 x 1 x 10	**219031***
	63 - 36	32 - 18	49.00	36.00	35.00	0.70 (kg)	M6 x 1 x 10	**219089**
	63 - 36	32 - 18	109.00	96.00	35.00	1.20 (kg)	M6 x 1 x 10	**219090**
ⓜ	63 - 36	32 - 18	109.00	96.00	40.00	1.40 (kg)	M6 x 1 x 10	**119021**
	63 - 36	32 - 18	109.00	96.00	46.00	1.60 (kg)	M6 x 1 x 10	**219033***
	63 - 36	40 - 22	40.00	27.00	–	0.80 (kg)	M6 x 1 x 10	**219091**
	63 - 36	40 - 22	100.00	87.00	47.00	1.60 (kg)	M6 x 1 x 15	**219092**
	63 - 36	40 - 22	150.00	137.00	50.00	2.40 (kg)	M6 x 1 x 15	**119067**
	63 - 36	50 - 28	40.00	–	63.00	1.00 (kg)	M6 x 1 x 10	**119064**
	63 - 36	50 - 28	40.00	27.00	–	0.80 (kg)	M6 x 1 x 10	**119096****
	63 - 36	50 - 28	100.00	–	63.00	2.40 (kg)	M6 x 1 x 15	**119025**
	63 - 36	50 - 28	100.00	87.00	–	1.70 (kg)	M6 x 1 x 10	**119097****
	80 - 36	63 - 36	50.00	–	80.00	1.60 (kg)	M6 x 1 x 15	**119098**
	100 - 56	80 - 36	70.00	52.00	–	3.60 (kg)	M8 x 1.25 x 20	**219066**

* Reinforced reducer
**For milling applications
NOTE: Balance refers to a specific residual imbalance of ≤ 10 g mm/kg

B10-M: 12-13

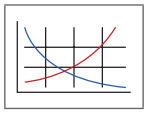

Key on B10-E: 1

B10-F

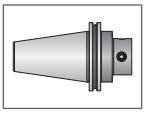

B10: VI-VII

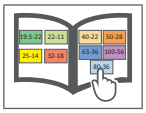

ⓜ = Metric (mm)

IMPORTANT: Max spindle speed refers to maximum possible speed for an individual boring head and is not a recommended parameter. Refer to page B10-M: 12 for recommended application-specific parameters. Factory technical assistance is available for your specific applications through our Application Engineering department.
email: **engineering.eu@alliedmachine.com**

⚠ WARNING **Exceeding weight capacity for machine tool spindle and tool changer can cause machine damage and/or serious injury. To prevent:**
-Consult machine tool builder for machine's weight limitations.
-Refer to example on page B10-M: 11 for calculating tool assembly weight
Factory technical assistance is also available for specific applications through our Application Engineering department. *email:* **engineering.eu@alliedmachine.com**

⚠ WARNING **Tool failure can cause serious injury. To prevent:**
-Do not exceed recommended 10xD length-to-diameter ratio or exceed 4 total components (including shank)
-When using Alu-Line® components, do not exceed recommended 5xD length-to-diameter ratio
-When using tool steel components, do not exceed recommended 6xD length-to-diameter ratio
-When using heavy metal components, do not exceed recommended 8xD length-to-diameter ratio
-When using a carbide shank, do not exceed recommended 9xD length-to-diameter ratio
-When using a NOVI$^{TECH®}$ module, do not exceed recommended 10xD length-to-diameter ratio
-Refer to examples on pages B10-M: 8-10 for calculating length-to-diameter ratio
Factory technical assistance is available for your specific applications through our Application Engineering department. *email:* **engineering.eu@alliedmachine.com**

Reducer

Balanced Alu-Line



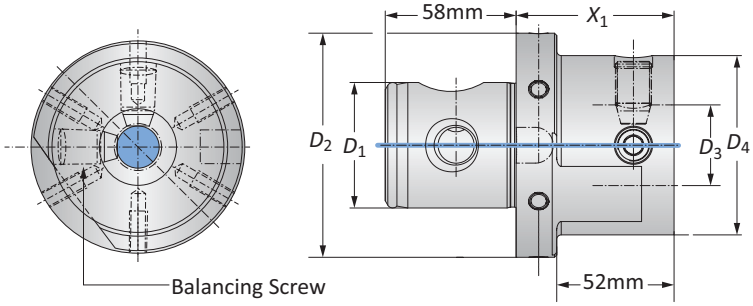

MVS Connection		Reducer				
D_2 | D_1	D_4 | D_3	X_1	L_1	Weight	Balancing Screw	Part No.
100 - 56	80 - 36	70.00	52.00	1.30 (kg)	M8 x 1.25 x 20	**319013**

NOTE: Balance refers to a specific residual imbalance of ≤ 10 g mm/kg

B10-M: 12-13 | B10-F | B10: VI-VII

Key on B10-E: 1

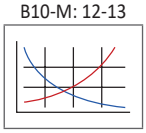

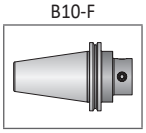

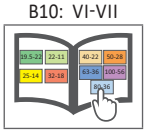

= Metric (mm)

IMPORTANT: Max spindle speed refers to maximum possible speed for an individual boring head and is not a recommended parameter. Refer to page B10-M: 12 for recommended application-specific parameters. Factory technical assistance is available for your specific applications through our Application Engineering department.
email: **engineering.eu@alliedmachine.com**

WARNING **Exceeding weight capacity for machine tool spindle and tool changer can cause machine damage and/or serious injury. To prevent:**
-Consult machine tool builder for machine's weight limitations.
-Refer to example on page B10-M: 11 for calculating tool assembly weight
Factory technical assistance is also available for specific applications through our Application Engineering department. *email:* **engineering.eu@alliedmachine.com**

WARNING **Tool failure can cause serious injury. To prevent:**
-Do not exceed recommended 10xD length-to-diameter ratio or exceed 4 total components (including shank)
-When using Alu-Line® components, do not exceed recommended 5xD length-to-diameter ratio
-When using tool steel components, do not exceed recommended 6xD length-to-diameter ratio
-When using heavy metal components, do not exceed recommended 8xD length-to-diameter ratio
-When using a carbide shank, do not exceed recommended 9xD length-to-diameter ratio
-When using a NOVI$^{TECH®}$ module, do not exceed recommended 10xD length-to-diameter ratio
-Refer to examples on pages B10-M: 8-10 for calculating length-to-diameter ratio
Factory technical assistance is available for your specific applications through our Application Engineering department. *email:* **engineering.eu@alliedmachine.com**

Heavy Metal Reducers

Vibration Reduction



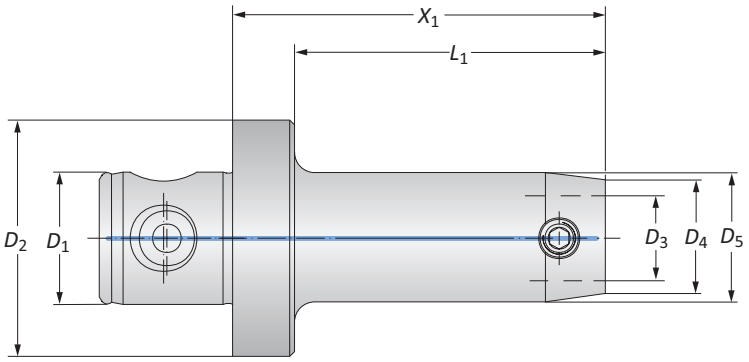

	MVS Connection		Heavy Metal Reducer				
	$D_2 \mid D_1$	$D_4 \mid D_3$	X_1	L_1	D_5	Weight	Part No.
	50 - 28	19.5 - 11	90.00	77.00	–	1.00 (kg)	**219055**
	50 - 28	22 - 11	110.00	97.00	23.00	1.30 (kg)	**219056**
	50 - 28	25 - 14	124.00	111.00	28.00	1.70 (kg)	**219057**
ⓜ	50 - 28	25 - 14	144.00	131.00	32.00	2.30 (kg)	**219058**
	50 - 28	25 - 14	164.00	151.00	35.00	2.90 (kg)	**219059**
	50 - 28	32 - 18	154.00	141.00	37.00	2.90 (kg)	**219093**
	50 - 28	32 - 18	154.00	141.00	42.00	3.70 (kg)	**219060**

NOTE: Heavy metal reducers are used to reduce vibration when machining deep boring applications. When using heavy metal reducers, the maximum cutting speed (V_c) is 200 M/min. If steel extensions are also used, reduce the cutting speed by 50% and use replaceable inserts where r = 0.10 mm.

B10-M: 12-13

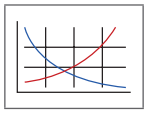

Key on B10-E: 1

B10-F

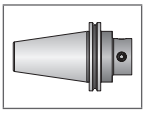

B10: VI-VII

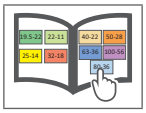

ⓜ = Metric (mm)

IMPORTANT: Max spindle speed refers to maximum possible speed for an individual boring head and is not a recommended parameter. Refer to page B10-M: 12 for recommended application-specific parameters. Factory technical assistance is available for your specific applications through our Application Engineering department.
email: **engineering.eu@alliedmachine.com**

⚠ WARNING **Exceeding weight capacity for machine tool spindle and tool changer can cause machine damage and/or serious injury. To prevent:**
-Consult machine tool builder for machine's weight limitations.
-Refer to example on page B10-M: 11 for calculating tool assembly weight
Factory technical assistance is also available for specific applications through our Application Engineering department. *email:* **engineering.eu@alliedmachine.com**

⚠ WARNING **Tool failure can cause serious injury. To prevent:**
-Do not exceed recommended 10xD length-to-diameter ratio or exceed 4 total components (including shank)
-When using Alu-Line® components, do not exceed recommended 5xD length-to-diameter ratio
-When using tool steel components, do not exceed recommended 6xD length-to-diameter ratio
-When using heavy metal components, do not exceed recommended 8xD length-to-diameter ratio
-When using a carbide shank, do not exceed recommended 9xD length-to-diameter ratio
-When using a NOVI$^{TECH®}$ module, do not exceed recommended 10xD length-to-diameter ratio
-Refer to examples on pages B10-M: 8-10 for calculating length-to-diameter ratio
Factory technical assistance is available for your specific applications through our Application Engineering department. *email:* **engineering.eu@alliedmachine.com**

Extensions

Balanced



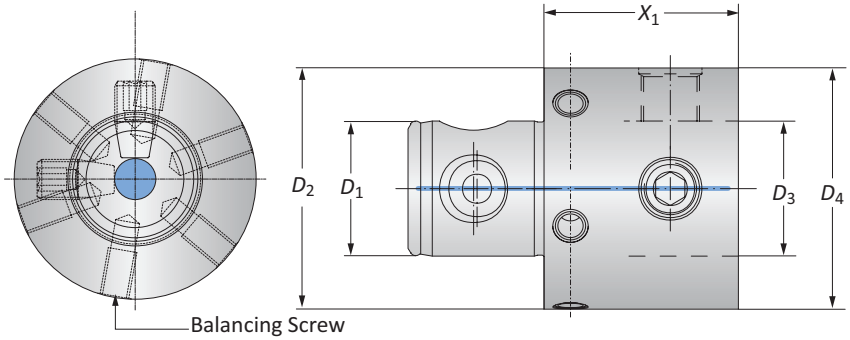

	MVS Connection D_2 | D_1	MVS Connection D_4 | D_3	Extension X_1	Weight	Balancing Screw	Part No.
	19.5 - 11	19.5 - 11	40.00	0.10 (kg)	–	**219043**
	22 - 11	22 - 11	40.00	0.10 (kg)	–	**219044**
	25 - 14	25 - 14	25.00	0.10 (kg)	–	**219068**
	25 - 14	25 - 14	40.00	0.10 (kg)	–	**119001**
	32 - 18	32 - 18	40.00	0.20 (kg)	–	**119002**
	40 - 22	40 - 22	40.00	0.40 (kg)	–	**119003**
	50 - 28	50 - 28	40.00	0.60 (kg)	M6 x 1 x 10	**119004**
	50 - 28*	50 - 28*	75.00	1.10 (kg)	M6 x 1 x 10	**219097**
	50 - 28	50 - 28	75.00	1.10 (kg)	M6 x 1 x 10	**219082**
	50 - 28	50 - 28	100.00	1.50 (kg)	M6 x 1 x 10	**119058**
	63 - 36	63 - 36	50.00	1.10 (kg)	M6 x 1 x 10	**119005**
Ⓜ	63 - 36	63 - 36	75.00	1.70 (kg)	M6 x 1 x 15	**219083**
	63 - 36	63 - 36	125.00	2.90 (kg)	M6 x 1 x 15	**119065**
	80 - 36	80 - 36	50.00	1.90 (kg)	M6 x 1 x 15	**119006**
	80 - 36	80 - 36	75.00	2.80 (kg)	M6 x 1 x 15	**219084**
	80 - 36	80 - 36	125.00	4.80 (kg)	M6 x 1 x 15	**119066**
	80 - 36	80 - 36	200.00	7.40 (kg)	M8 x 1.25 x 21	**219094**
	80 - 36	80 - 36	275.00	10.10 (kg)	M8 x 1.25 x 21	**119069**
	100 - 56	100 - 56	75.00	4.30 (kg)	M8 x 1.25 x 20	**219095**
	100 - 56	100 - 56	100.00	5.60 (kg)	M8 x 1.25 x 20	**219061**
	100 - 56	100 - 56	150.00	8.10 (kg)	M8 x 1.25 x 20	**219096**
	100 - 56	100 - 56	200.00	10.20 (kg)	M8 x 1.25 x 20	**219062**
	100 - 56	100 - 56	300.00	14.60 (kg)	M8 x 1.25 x 20	**219063**

*D_2 / D_4 = 49.50 mm for boring 50.00 mm diameter applications
NOTE: Balance refers to a specific residual imbalance of ≤ 10 g mm/kg

B10-M: 12-13
Key on B10-E: 1
B10-F
B10: VI-VII

Ⓜ = Metric (mm)

IMPORTANT: Max spindle speed refers to maximum possible speed for an individual boring head and is not a recommended parameter. Refer to page B10-M: 12 for recommended application-specific parameters. Factory technical assistance is available for your specific applications through our Application Engineering department.
email: **engineering.eu@alliedmachine.com**

⚠ WARNING **Exceeding weight capacity for machine tool spindle and tool changer can cause machine damage and/or serious injury. To prevent:**
-Consult machine tool builder for machine's weight limitations.
-Refer to example on page B10-M: 11 for calculating tool assembly weight
Factory technical assistance is also available for specific applications through our Application Engineering department. *email:* **engineering.eu@alliedmachine.com**

⚠ WARNING **Tool failure can cause serious injury. To prevent:**
-Do not exceed recommended 10xD length-to-diameter ratio or exceed 4 total components (including shank)
-When using Alu-Line® components, do not exceed recommended 5xD length-to-diameter ratio
-When using tool steel components, do not exceed recommended 6xD length-to-diameter ratio
-When using heavy metal components, do not exceed recommended 8xD length-to-diameter ratio
-When using a carbide shank, do not exceed recommended 9xD length-to-diameter ratio
-When using a NOVI$^{TECH®}$ module, do not exceed recommended 10xD length-to-diameter ratio
-Refer to examples on pages B10-M: 8-10 for calculating length-to-diameter ratio
Factory technical assistance is available for your specific applications through our Application Engineering department. *email:* **engineering.eu@alliedmachine.com**

Extensions

Balanced Alu-Line



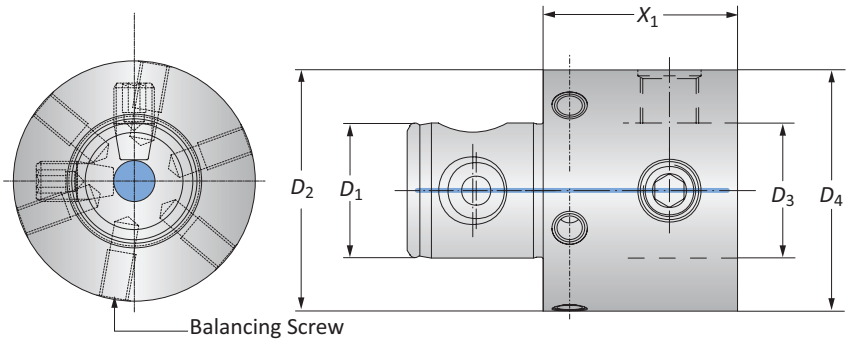

MVS Connection $D_2 \mid D_1$	MVS Connection $D_4 \mid D_3$	Modules X_1	Weight	Balancing Screw	Part No.
50 - 28	50 - 28	40.00	0.20 (kg)	M6 x 1 x 8	**319021**
50 - 28	50 - 28	75.00	0.40 (kg)	M6 x 1 x 10	**319022**
50 - 28	50 - 28	100.00	0.60 (kg)	M6 x 1 x 10	**319023**
63 - 36	63 - 36	50.00	0.40 (kg)	M6 x 1 x 8	**319002**
63 - 36	63 - 36	125.00	1.10 (kg)	M6 x 1 x 10	**319003**
80 - 36	80 - 36	50.00	0.70 (kg)	M6 x 1 x 10	**319004**
80 - 36	80 - 36	75.00	1.00 (kg)	M6 x 1 x 10	**319016**
80 - 36	80 - 36	125.00	1.80 (kg)	M6 x 1 x 10	**319005**
80 - 36	80 - 36	200.00	2.70 (kg)	M6 x 1 x 10	**319017**
80 - 36	80 - 36	275.00	3.70 (kg)	M6 x 1 x 10	**319006**
100 - 56	100 - 56	75.00	1.50 (kg)	M8 x 1.25 x 20	**319019**
100 - 56	100 - 56	100.00	2.20 (kg)	M8 x 1.25 x 20	**319007**
100 - 56	100 - 56	150.00	3.00 (kg)	M8 x 1.25 x 20	**319018**
100 - 56	100 - 56	200.00	3.80 (kg)	M8 x 1.25 x 20	**319008**
100 - 56	100 - 56	300.00	5.40 (kg)	M8 x 1.25 x 20	**319009**

NOTE: Balance refers to a specific residual imbalance of ≤ 10 g mm/kg

B10-M: 12-13
Key on B10-E: 1

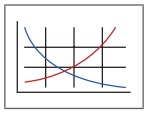

B10-F

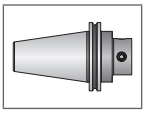

B10: VI-VII

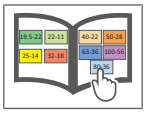

Ⓜ = Metric (mm)

IMPORTANT: Max spindle speed refers to maximum possible speed for an individual boring head and is not a recommended parameter. Refer to page B10-M: 12 for recommended application-specific parameters. Factory technical assistance is available for your specific applications through our Application Engineering department.
email: **engineering.eu@alliedmachine.com**

⚠ WARNING **Exceeding weight capacity for machine tool spindle and tool changer can cause machine damage and/or serious injury. To prevent:**
-Consult machine tool builder for machine's weight limitations.
-Refer to example on page B10-M: 11 for calculating tool assembly weight
Factory technical assistance is also available for specific applications through our Application Engineering department. *email:* **engineering.eu@alliedmachine.com**

⚠ WARNING **Tool failure can cause serious injury. To prevent:**
-Do not exceed recommended 10xD length-to-diameter ratio or exceed 4 total components (including shank)
-When using Alu-Line® components, do not exceed recommended 5xD length-to-diameter ratio
-When using tool steel components, do not exceed recommended 6xD length-to-diameter ratio
-When using heavy metal components, do not exceed recommended 8xD length-to-diameter ratio
-When using a carbide shank, do not exceed recommended 9xD length-to-diameter ratio
-When using a NOVI$^{TECH®}$ module, do not exceed recommended 10xD length-to-diameter ratio
-Refer to examples on pages B10-M: 8-10 for calculating length-to-diameter ratio
Factory technical assistance is available for your specific applications through our Application Engineering department. *email:* **engineering.eu@alliedmachine.com**

SECTION

B10-F

Master Shanks with MVS Connection

Wohlhaupter® Master Shanks with MVS Connection



The MVS Connection

Wohlhaupter MVS connection shanks provide a high level of accuracy when building or replacing components. Our master shanks adapt to any machine tool spindle, making it easy to find the shank you need.

Your safety and the safety of others is very important. This catalogue contains important safety messages. Always read and follow all safety precautions.

This triangle is a safety hazard symbol. It alerts you to potential safety hazards that can cause tool failure and serious injury.

When you see this symbol in the catalogue, look for a related safety message that may be near this triangle or referred to in the nearby text.

There are safety signal words also used in the catalogue. Safety messages follow these words.

⚠ **WARNING**

WARNING (shown above) means that failure to follow the precautions in this message could result in tool failure and serious injury.

NOTICE means that failure to follow the precautions in this message could result in damage to the tool or machine but not result in personal injury.

NOTE and **IMPORTANT** are also used. These are important that you read and follow but are not safety-related.

Visit www.alliedmachine.com for the most up-to-date information and procedures.

Applicable Industries

Aerospace | Agriculture | Automotive | Firearms | General Machining | Oil & Gas | Renewable Energy

Reference Icons
The following icons will appear throughout the catalogue to help you navigate between products.

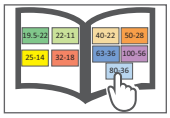

MVS Connection Colour Guide
Detailed instructions and information regarding the MVS connection(s)

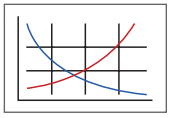

Recommended Cutting Data
Speed and feed recommendations for optimum and safe boring

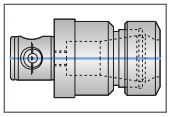

Clamping Elements
Collet chucks for carbide shanks



Through Coolant Option
Indicates that the product is through coolant

Master Shanks with MVS Connection Table of Contents

248 Shanks 2

Carbide Shanks 3

HSK Shanks (DIN 69893) 4

Polygon Shaft Shanks (PSC) (ISO26623-1) 5

CAT Shanks with Metric Threads 6

Dual Contact SK Shanks (DIN 69871-AD / BD) 7

SK Shanks (DIN 69871-AD / B-D) 8

Dual Contact BT Shanks (JIS B 6339) 9

BT Shanks (JIS B 6339) 10

NMTB Shanks 11

DIN 2080 Shanks 12

Morse Taper Shanks (DIN 1806) & R8 Shanks 13

Accessories . . . . . 14 - 15

Mounting Fixtures 16

248 Shanks

Steel | Carbide



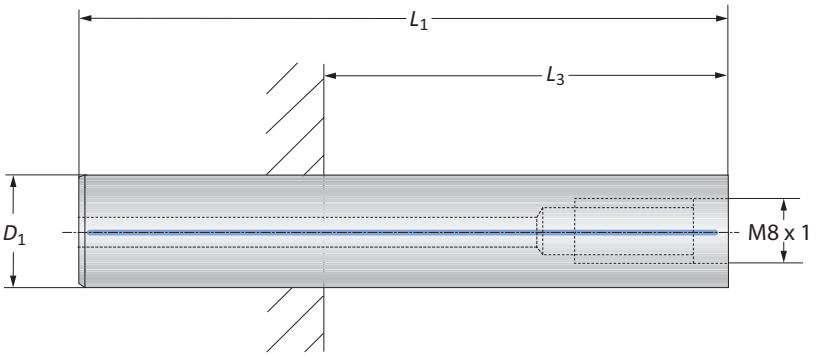

Steel Shanks

	Connection	Shank D_1	Shank L_1	Shank $L_{3\ max}$*	$L_{3\ min}$* SK 40+50	$L_{3\ min}$* HSK-A 63	$L_{3\ min}$* HSK-A 100	Weight	Part No.
	M8 x 1	15.00	85.00	37.00	–	–	–	0.10 (kg)	**248136**
ⓜ	M8 x 1	18.00	100.00	52.00	–	5.00	12.00	0.20 (kg)	**248137**
	M8 x 1	23.00	117.00	69.00	–	22.00	29.00	0.40 (kg)	**248138**

*L_3 dimensions apply to collet chucks



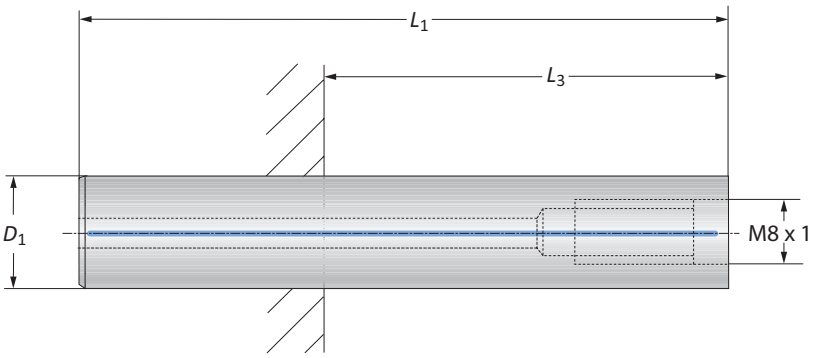

Carbide Shanks

	Connection	Shank D_1	Shank L_1	Shank $L_{3\ max}$*	$L_{3\ min}$* SK 40	$L_{3\ min}$* SK 50	$L_{3\ min}$* HSK-A 63	$L_{3\ min}$* HSK-A 100	Weight	Part No.
	M8 x 1	15.00	130.00	82.00	20.00	20.00	35.00	42.00	0.30 (kg)	**248142**
ⓜ	M8 x 1	18.00	155.00	107.00	39.00	21.00	60.00	67.00	0.60 (kg)	**248143**
	M8 x 1	23.00	180.00	132.00	64.00	46.00	85.00	92.00	1.10 (kg)	**248144**
	M8 x 1	23.00	242.00	194.00	126.00	108.00	147.00	154.00	1.40 (kg)	**248145**

*L_3 dimensions apply to collet chucks

B10-M: 12-13
Key on B10-A: 1

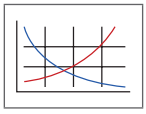

B10-A: 30

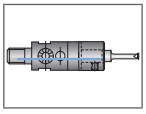

B10: VI-VII

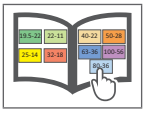

ⓜ = Metric (mm)

⚠ WARNING **Exceeding weight capacity for machine tool spindle and tool changer can cause machine damage and/or serious injury. To prevent:**
-Consult machine tool builder for machine's weight limitations.
-Refer to example on page B10-M: 11 for calculating tool assembly weight
Factory technical assistance is also available for specific applications through our Application Engineering department. *email: engineering.eu@alliedmachine.com*

⚠ WARNING **Tool failure can cause serious injury. To prevent:**
-Do not exceed recommended 10xD length-to-diameter ratio or exceed 4 total components (including shank)
-When using Alu-Line® components, do not exceed recommended 5xD length-to-diameter ratio
-When using tool steel components, do not exceed recommended 6xD length-to-diameter ratio
-When using heavy metal reducers, do not exceed recommended 8xD length-to-diameter ratio
-When using a carbide shank, do not exceed recommended 9xD length-to-diameter ratio
-When using a NOVI$^{TECH®}$ module, do not exceed recommended 10xD length-to-diameter ratio
-Refer to examples on pages B10-M: 8-10 for calculating length-to-diameter ratio
Factory technical assistance is available for your specific applications through our Application Engineering department. *email:* **engineering.eu@alliedmachine.com**

Carbide Master Shanks



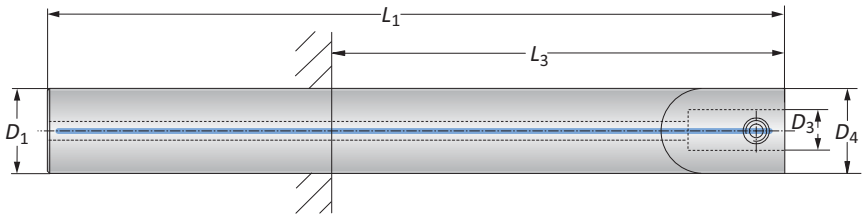

	Connection	Shank			$L_{3\ min}$					
	D_4 | D_3	L_1	D_1	$L_{3\ max}$	SK 40	SK 50	HSK-A 63	HSK-A 100	Weight	Part No.
	18 - 11	155.00	18.00	107.00	39.00	26.00	60.00	67.00	0.50 (kg)	**299009***
	22 - 11	140.00	22.00	92.00	28.00	28.00	45.00	52.00	0.70 (kg)	**299001***
	22 - 11	190.00	22.00	142.00	74.00	56.00	95.00	102.00	0.90 (kg)	**299002***
	22 - 11	231.00	22.00	183.00	115.00	97.00	136.00	143.00	1.10 (kg)	**299003***
ⓜ	25 - 14	165.00	25.00	117.00	49.00	36.00	70.00	77.00	1.00 (kg)	**299004***
	25 - 14	215.00	25.00	167.00	99.00	81.00	120.00	127.00	1.30 (kg)	**299005***
	32 - 18	210.00	32.00	–	136.00	136.00	139.00	137.00	2.10 (kg)	**299006****
	32 - 18	260.00	32.00	–	186.00	186.00	189.00	187.00	2.60 (kg)	**299007****
	40 - 22	415.00	40.00	–	–	333.00	–	333.00	5.20 (kg)	**299008****

NOTE: Adapter shanks are used for extensions up to 10xD
*Recommended clamping element: collet chuck ISO 15488 (DIN 6499-B) (pg. B10-I: 5)
**Recommended clamping element: collet chuck ISO 10897 (DIN 6388) (pg. B10-I: 5)

B10-M: 12-13
Key on B10-F: 1

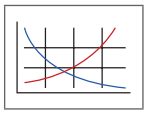

B10: VI-VII

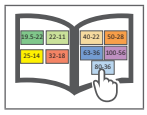

B10-I: 5

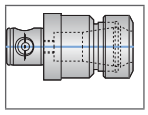

ⓜ = Metric (mm)

⚠ WARNING **Exceeding weight capacity for machine tool spindle and tool changer can cause machine damage and/or serious injury. To prevent:**
-Consult machine tool builder for machine's weight limitations.
-Refer to example on page B10-M: 11 for calculating tool assembly weight
Factory technical assistance is also available for specific applications through our Application Engineering department. *email: engineering.eu@alliedmachine.com*

⚠ WARNING **Tool failure can cause serious injury. To prevent:**
-Do not exceed recommended 10xD length-to-diameter ratio or exceed 4 total components (including shank)
-When using Alu-Line® components, do not exceed recommended 5xD length-to-diameter ratio
-When using tool steel components, do not exceed recommended 6xD length-to-diameter ratio
-When using heavy metal reducers, do not exceed recommended 8xD length-to-diameter ratio
-When using a carbide shank, do not exceed recommended 9xD length-to-diameter ratio
-When using a NOVI$^{TECH®}$ module, do not exceed recommended 10xD length-to-diameter ratio
-Refer to examples on pages B10-M: 8-10 for calculating length-to-diameter ratio
Factory technical assistance is available for your specific applications through our Application Engineering department. *email:* **engineering.eu@alliedmachine.com**

HSK Master Shanks (DIN 69893)

Balanced



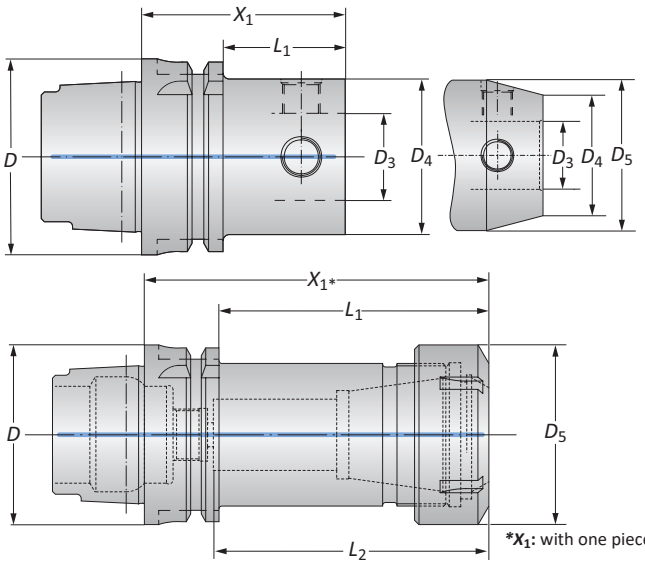

*X_1: with one piece clamping nut

Taper Size	Connection	Shank					
D	D_4 | D_3	X_1	L_1	L_2	D_5	Weight	Part No.
40	40 - 22	56.00	–	–	–	0.40 (kg)	**246016**
40	50 - 28	70.00	–	–	–	0.70 (kg)	**246004**
50	40 - 22	56.00	30.00	–	–	0.60 (kg)	**246015**
50	50 - 28	65.00	–	–	–	0.80 (kg)	**245011**
63	25 - 14	46.00	20.00	–	–	0.70 (kg)	**246012**
63	32 - 18	56.00	30.00	–	–	0.80 (kg)	**246013**
63	40 - 22	56.00	30.00	–	–	0.80 (kg)	**246014**
63	50 - 28	65.00	39.00	–	–	1.10 (kg)	**245012**
63	63 - 36	80.00	–	–	–	1.50 (kg)	**245013**
63	80 - 36	80.00	–	–	–	2.10 (kg)	**246009**
63	ER 40	120.00	94.00	95.00	63.00	1.70 (kg)	**252090****
100	50 - 28	65.00	36.00	–	–	2.40 (kg)	**245014**
100	50 - 28	180.00	151.00	–	60.00	5.00 (kg)	**246020**
100	50 - 28*	180.00	151.00	–	–	4.00 (kg)	**246021**
100	63 - 36	80.00	51.00	–	–	2.90 (kg)	**245015**
100	63 - 36	205.00	176.00	–	78.00	7.80 (kg)	**246019**
100	63 - 36	205.00	176.00	–	–	7.80 (kg)	**246022**
100	80 - 36	80.00	51.00	–	–	3.70 (kg)	**245016**
100	80 - 36	255.00	226.00	–	90.00	12.60 (kg)	**246018**
100	80 - 36	255.00	226.00	–	–	10.40 (kg)	**246023**
100	100 - 56	100.00	–	–	–	5.00 (kg)	**246010**
100	100 - 56	300.00	221.00	–	–	17.50 (kg)	**246017**
100	ER 40	120.00	91.00	88.00	63.00	3.50 (kg)	**252091****

NOTE: Balanced refers to a specific residual imbalance of ≤4.00 gmm/kg
*D_4 = 49.50 mm
**Balanced without clamping nut

B10-M: 12-13

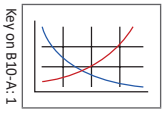

Key on B10-A:1

B10: VI-VII

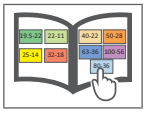

Ⓜ = Metric (mm)

⚠ WARNING **Exceeding weight capacity for machine tool spindle and tool changer can cause machine damage and/or serious injury. To prevent:**
-Consult machine tool builder for machine's weight limitations.
-Refer to example on page B10-M: 11 for calculating tool assembly weight
Factory technical assistance is also available for specific applications through our Application Engineering department. *email: engineering.eu@alliedmachine.com*

⚠ WARNING **Tool failure can cause serious injury. To prevent:**
-Do not exceed recommended 10xD length-to-diameter ratio or exceed 4 total components (including shank)
-When using Alu-Line® components, do not exceed recommended 5xD length-to-diameter ratio
-When using tool steel components, do not exceed recommended 6xD length-to-diameter ratio
-When using heavy metal reducers, do not exceed recommended 8xD length-to-diameter ratio
-When using a carbide shank, do not exceed recommended 9xD length-to-diameter ratio
-When using a NOVI$^{TECH®}$ module, do not exceed recommended 10xD length-to-diameter ratio
-Refer to examples on pages B10-M: 8-10 for calculating length-to-diameter ratio
Factory technical assistance is available for your specific applications through our Application Engineering department. *email:* **engineering.eu@alliedmachine.com**

Polygon Shaft Master Shanks (PSC) (ISO 26623-1)

Balanced



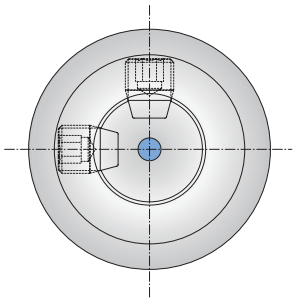

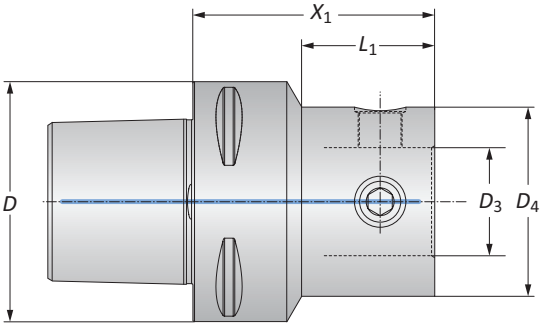

	PSC	Connection	Shank			
	D	D_4 | D_3	X_1	L_1	Weight	Part No.
	50	40 - 22	54.00	31.10	0.70 (kg)	**227014**
	50	50 - 28	65.00	–	1.00 (kg)	**227001**
	50	63 - 36	80.00	–	1.50 (kg)	**227002**
	50	80 - 36	80.00	–	2.50 (kg)	**227012**
	63	25 - 14	54.00	21.10	0.90 (kg)	**227010**
	63	32 - 18	54.00	23.00	1.00 (kg)	**227009**
Ⓜ	63	40 - 22	65.00	36.40	1.10 (kg)	**227008**
	63	50 - 28	65.00	39.00	1.30 (kg)	**227003**
	63	63 - 36	80.00	-	1.80 (kg)	**227004**
	63	80 - 36	80.00	-	2.60 (kg)	**227005**
	80	50 - 28	65.00	25.00	2.20 (kg)	**227011**
	80	63 - 36	80.00	45.10	2.60 (kg)	**227006**
	80	80 - 36	80.00	-	3.30 (kg)	**227007**

NOTE: Balanced refers to a specific residual imbalance of ≤4.00 gmm/kg

B10-M: 12-13

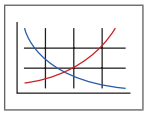

Key on B10-F: 1

B10: VI-VII

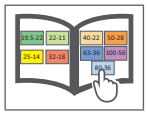

Ⓜ = Metric (mm)

⚠ WARNING **Exceeding weight capacity for machine tool spindle and tool changer can cause machine damage and/or serious injury. To prevent:**
-Consult machine tool builder for machine's weight limitations.
-Refer to example on page B10-M: 11 for calculating tool assembly weight
Factory technical assistance is also available for specific applications through our Application Engineering department. *email: engineering.eu@alliedmachine.com*

⚠ WARNING **Tool failure can cause serious injury. To prevent:**
-Do not exceed recommended 10xD length-to-diameter ratio or exceed 4 total components (including shank)
-When using Alu-Line® components, do not exceed recommended 5xD length-to-diameter ratio
-When using tool steel components, do not exceed recommended 6xD length-to-diameter ratio
-When using heavy metal reducers, do not exceed recommended 8xD length-to-diameter ratio
-When using a carbide shank, do not exceed recommended 9xD length-to-diameter ratio
-When using a NOVI$^{TECH®}$ module, do not exceed recommended 10xD length-to-diameter ratio
-Refer to examples on pages B10-M: 8-10 for calculating length-to-diameter ratio
Factory technical assistance is available for your specific applications through our Application Engineering department. *email:* **engineering.eu@alliedmachine.com**

CAT Master Shanks with Metric Threads



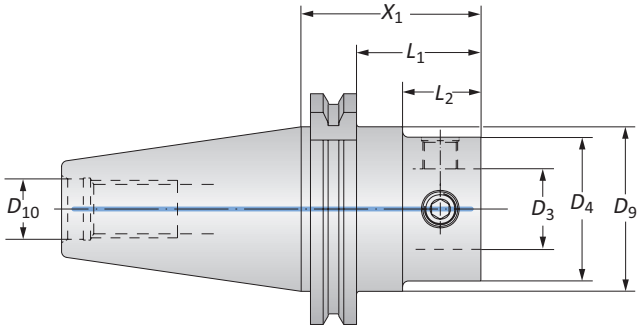

	Taper Size	Connection D_4 | D_3	Shank X_1	L_1	L_2	D_9	D_{10}	Weight	Part No.
	40	50 - 28	62.00	42.90	–	44.45	M16 x 2	1.30 (kg)	**132022T016960**
	40	63 - 36	82.00	62.90	–	44.45	M16 x 2	1.80 (kg)	**132066T016960**
ⓜ	50	50 - 28	62.00	42.90	27.00	69.85	M24 x 3	3.40 (kg)	**132022T016962**
	50	63 - 36	72.00	52.90	37.00	69.85	M24 x 3	3.70 (kg)	**132066T016962**
	50	80 - 36	72.00	52.90	–	69.85	M24 x 3	4.20 (kg)	**132088T016962**
	50	100 - 56	105.00	85.90	–	69.85	M24 x 3	5.20 (kg)	**132076T016962**

B10-M: 12-13

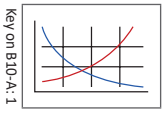

B10: VI-VII

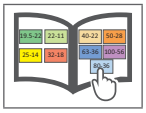

ⓜ = Metric (mm)

⚠ WARNING **Exceeding weight capacity for machine tool spindle and tool changer can cause machine damage and/or serious injury. To prevent:**
-Consult machine tool builder for machine's weight limitations.
-Refer to example on page B10-M: 11 for calculating tool assembly weight
Factory technical assistance is also available for specific applications through our Application Engineering department. *email: engineering.eu@alliedmachine.com*

⚠ WARNING **Tool failure can cause serious injury. To prevent:**
-Do not exceed recommended 10xD length-to-diameter ratio or exceed 4 total components (including shank)
-When using Alu-Line® components, do not exceed recommended 5xD length-to-diameter ratio
-When using tool steel components, do not exceed recommended 6xD length-to-diameter ratio
-When using heavy metal reducers, do not exceed recommended 8xD length-to-diameter ratio
-When using a carbide shank, do not exceed recommended 9xD length-to-diameter ratio
-When using a NOVI$^{TECH®}$ module, do not exceed recommended 10xD length-to-diameter ratio
-Refer to examples on pages B10-M: 8-10 for calculating length-to-diameter ratio
Factory technical assistance is available for your specific applications through our Application Engineering department. *email:* **engineering.eu@alliedmachine.com**

Dual Contact SK Master Shanks (DIN 69871-AD / B-D)



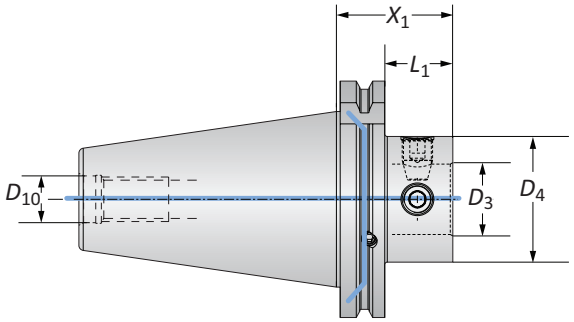

	Taper Size	Connection D_4 | D_3	Shank X_1	L_1	D_{10}	Weight	Part No.
ⓜ	40	50 - 28	46.00	26.90	M16 x 2	1.10 (kg)	**353064**
	40	63 - 36	66.00	46.90	M16 x 2	1.50 (kg)	**353065**
	50	50 - 28	46.00	26.90	M24 x 3	2.90 (kg)	**353066**
	50	63 - 36	56.00	36.90	M24 x 3	3.20 (kg)	**353067**
	50	80 - 36	56.00	36.90	M24 x 3	3.70 (kg)	**353068**
	50	100 - 56	90.00	70.90	M24 x 3	5.30 (kg)	**353069**

B10-M: 12-13

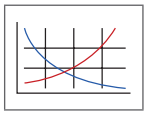

Key on B10-F: 1

B10: VI-VII

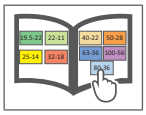

ⓜ = Metric (mm)

WARNING **Exceeding weight capacity for machine tool spindle and tool changer can cause machine damage and/or serious injury. To prevent:**
-Consult machine tool builder for machine's weight limitations.
-Refer to example on page B10-M: 11 for calculating tool assembly weight
Factory technical assistance is also available for specific applications through our Application Engineering department. *email: engineering.eu@alliedmachine.com*

WARNING **Tool failure can cause serious injury. To prevent:**
-Do not exceed recommended 10xD length-to-diameter ratio or exceed 4 total components (including shank)
-When using Alu-Line® components, do not exceed recommended 5xD length-to-diameter ratio
-When using tool steel components, do not exceed recommended 6xD length-to-diameter ratio
-When using heavy metal reducers, do not exceed recommended 8xD length-to-diameter ratio
-When using a carbide shank, do not exceed recommended 9xD length-to-diameter ratio
-When using a NOVI$^{TECH®}$ module, do not exceed recommended 10xD length-to-diameter ratio
-Refer to examples on pages B10-M: 8-10 for calculating length-to-diameter ratio
Factory technical assistance is available for your specific applications through our Application Engineering department. *email:* **engineering.eu@alliedmachine.com**

SK Master Shanks (DIN 69871-AD / B-D)

Balanced



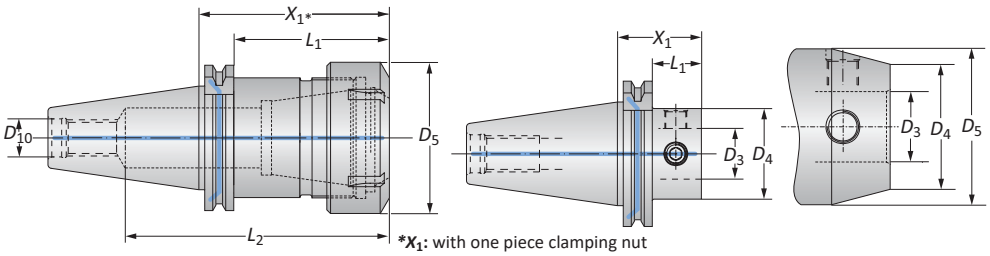

***X_1**: with one piece clamping nut

	Taper Size	Connection D_4 | D_3	Shank X_1	L_1	L_2	D_5	D_{10}	Weight	Part No.
	30	40 - 22	46.00	26.90	–	–	M12 x 1.75	0.50 (kg)	**327001**
	30	50 - 28	58.00	38.90	–	–	M12 x 1.75	0.80 (kg)	**327002**
	40	32 - 18	55.00	35.90	–	40.00	M16 x 2	1.10 (kg)	**327003**
	40	40 - 22	46.00	26.90	–	–	M16 x 2	1.00 (kg)	**327004**
	40	50 - 28	46.00	26.90	–	–	M16 x 2	1.10 (kg)	**327005**
	40	63 - 36	66.00	46.90	–	–	M16 x 2	1.40 (kg)	**327006**
	40	80 - 36	66.00	46.90	–	–	M16 x 2	1.90 (kg)	**327007**
	40	ER 40	80.00	60.90	116.00	63.00	M16 x 2	1.30 (kg)	**259079****
	50	50 - 28	46.00	26.90	–	–	M24 x 3	2.90 (kg)	**327017**
ⓜ	50	50 - 28	186.00	166.90	–	60.00	M24 x 3	6.00 (kg)	**327025**
	50	50 - 28*	186.00	166.90	–	–	M24 x 3	4.90 (kg)	**327033**
	50	63 - 36	56.00	36.90	–	–	M24 x 3	3.20 (kg)	**327018**
	50	63 - 36	206.00	186.90	–	78.00	M24 x 3	8.90 (kg)	**327026**
	50	63 - 36	206.00	186.90	–	–	M24 x 3	6.90 (kg)	**327034**
	50	80 - 36	56.00	36.90	–	–	M24 x 3	3.70 (kg)	**327010**
	50	80 - 36	256.00	236.90	–	90.00	M24 x 3	13.60 (kg)	**327027**
	50	100 - 56	90.00	70.90	–	–	M24 x 3	5.30 (kg)	**327011**
	50	100 - 56	290.00	270.90	–	–	M24 x 3	17.10 (kg)	**327028**
	50	ER 40	80.00	55.20	134.00	63.00	M24 x 3	3.10 (kg)	**259080****

NOTE: Balanced refers to a specific residual imbalance of ≤4.00 gmm/kg
* D_4 = (49.50 mm)
**Balanced without clamping nut

B10-M: 12-13

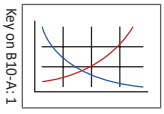

Key on B10-A:1

B10: VI-VII

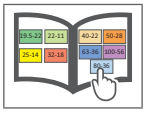

ⓜ = Metric (mm)

⚠ WARNING **Exceeding weight capacity for machine tool spindle and tool changer can cause machine damage and/or serious injury. To prevent:**
-Consult machine tool builder for machine's weight limitations.
-Refer to example on page B10-M: 11 for calculating tool assembly weight
Factory technical assistance is also available for specific applications through our Application Engineering department. *email: engineering.eu@alliedmachine.com*

⚠ WARNING **Tool failure can cause serious injury. To prevent:**
-Do not exceed recommended 10xD length-to-diameter ratio or exceed 4 total components (including shank)
-When using Alu-Line® components, do not exceed recommended 5xD length-to-diameter ratio
-When using tool steel components, do not exceed recommended 6xD length-to-diameter ratio
-When using heavy metal reducers, do not exceed recommended 8xD length-to-diameter ratio
-When using a carbide shank, do not exceed recommended 9xD length-to-diameter ratio
-When using a NOVI$^{TECH®}$ module, do not exceed recommended 10xD length-to-diameter ratio
-Refer to examples on pages B10-M: 8-10 for calculating length-to-diameter ratio
Factory technical assistance is available for your specific applications through our Application Engineering department. *email:* **engineering.eu@alliedmachine.com**

Dual Contact BT Master Shanks (JIS B 6339)



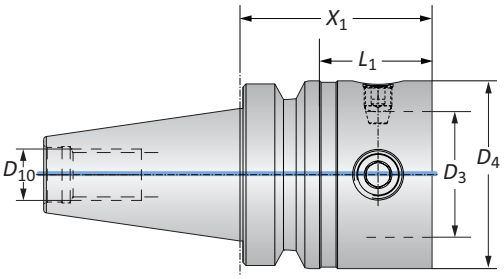

	Taper Size	Connection D_4 | D_3	Shank X_1	Shank L_1	Shank D_{10}	Weight	Part No.
ⓜ	40	50 - 28	54.00	27.00	M16 x 2	1.20 (kg)	**353070**
	40	63 - 36	64.00	37.00	M16 x 2	1.50 (kg)	**353071**
	50	50 - 28	65.00	26.80	M24 x 3	4.00 (kg)	**353072**
	50	63 - 36	75.00	36.80	M24 x 3	4.20 (kg)	**353073**
	50	80 - 36	75.00	36.80	M24 x 3	4.80 (kg)	**353074**
	50	100 - 56	90.00	51.80	M24 x 3	5.50 (kg)	**353075**

B10-M: 12-13

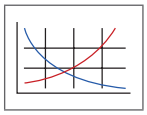

Key on B10-F: 1

B10: VI-VII

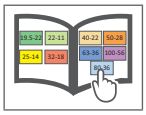

ⓜ = Metric (mm)

WARNING **Exceeding weight capacity for machine tool spindle and tool changer can cause machine damage and/or serious injury. To prevent:**
-Consult machine tool builder for machine's weight limitations.
-Refer to example on page B10-M: 11 for calculating tool assembly weight
Factory technical assistance is also available for specific applications through our Application Engineering department. *email: engineering.eu@alliedmachine.com*

WARNING **Tool failure can cause serious injury. To prevent:**
-Do not exceed recommended 10xD length-to-diameter ratio or exceed 4 total components (including shank)
-When using Alu-Line® components, do not exceed recommended 5xD length-to-diameter ratio
-When using tool steel components, do not exceed recommended 6xD length-to-diameter ratio
-When using heavy metal reducers, do not exceed recommended 8xD length-to-diameter ratio
-When using a carbide shank, do not exceed recommended 9xD length-to-diameter ratio
-When using a NOVI$^{TECH®}$ module, do not exceed recommended 10xD length-to-diameter ratio
-Refer to examples on pages B10-M: 8-10 for calculating length-to-diameter ratio
Factory technical assistance is available for your specific applications through our Application Engineering department. *email:* **engineering.eu@alliedmachine.com**

BT Master Shanks (JIS B 6339)

Balanced



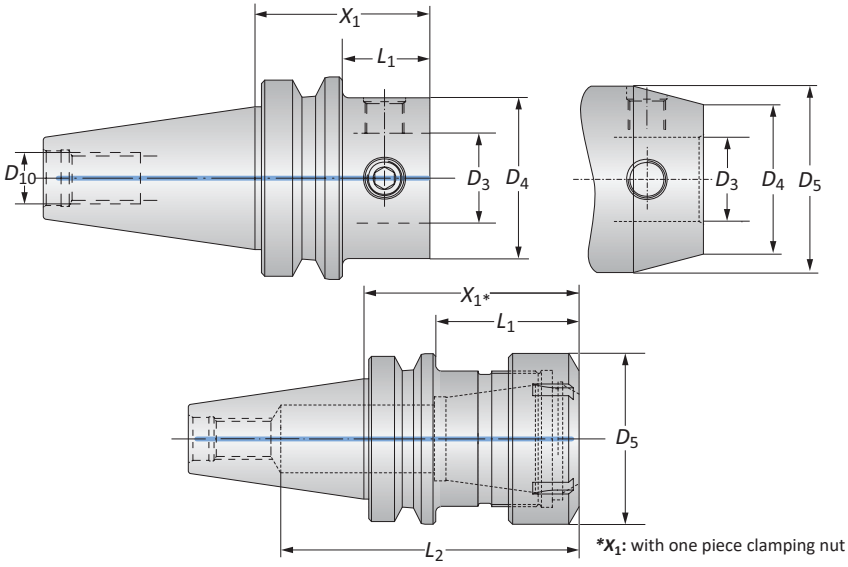

***X_1**: with one piece clamping nut

	Taper Size	Connection D_4 | D_3	Shank X_1	L_1	L_2	D_5	D_{10}	Weight	Part No.
	30	40 - 22	40.00	18.00	–	–	M12 x 1.75	0.50 (kg)	**327012**
	30	50 - 28	46.00	24.00	–	–	M12 x 1.75	0.60 (kg)	**327013**
	40	40 - 22	46.00	19.00	–	–	M16 x 2	1.10 (kg)	**327016**
	40	50 - 28	54.00	27.00	–	–	M16 x 2	1.20 (kg)	**327019**
	40	63 - 36	64.00	37.00	–	–	M16 x 2	1.50 (kg)	**327020**
ⓜ	40	ER 40	70.00	43.00	104.00	63.00	M16 x 2	1.20 (kg)	**259081***
	50	50 - 28	65.00	26.80	–	–	M24 x 3	3.90 (kg)	**327021**
	50	63 - 36	75.00	36.80	–	–	M24 x 3	4.20 (kg)	**327022**
	50	80 - 36	75.00	36.80	–	–	M24 x 3	4.70 (kg)	**327023**
	50	100 - 56	90.00	51.80	–	–	M24 x 3	5.50 (kg)	**327024**
	50	ER 40	80.00	41.80	135.00	63.00	M24 x 3	3.80 (kg)	**259082***

NOTE: Balanced refers to a specific residual imbalance of ≤4.00 gmm/kg
*Balanced without clamping nut

B10-M: 12-13

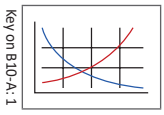

Key on B10-A:1

B10: VI-VII

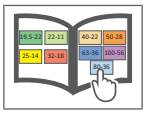

ⓜ = Metric (mm)

⚠ WARNING **Exceeding weight capacity for machine tool spindle and tool changer can cause machine damage and/or serious injury. To prevent:**
-Consult machine tool builder for machine's weight limitations.
-Refer to example on page B10-M: 11 for calculating tool assembly weight
Factory technical assistance is also available for specific applications through our Application Engineering department. *email: engineering.eu@alliedmachine.com*

⚠ WARNING **Tool failure can cause serious injury. To prevent:**
-Do not exceed recommended 10xD length-to-diameter ratio or exceed 4 total components (including shank)
-When using Alu-Line® components, do not exceed recommended 5xD length-to-diameter ratio
-When using tool steel components, do not exceed recommended 6xD length-to-diameter ratio
-When using heavy metal reducers, do not exceed recommended 8xD length-to-diameter ratio
-When using a carbide shank, do not exceed recommended 9xD length-to-diameter ratio
-When using a NOVI$^{TECH®}$ module, do not exceed recommended 10xD length-to-diameter ratio
-Refer to examples on pages B10-M: 8-10 for calculating length-to-diameter ratio
Factory technical assistance is available for your specific applications through our Application Engineering department. *email:* **engineering.eu@alliedmachine.com**

NMTB Master Shanks



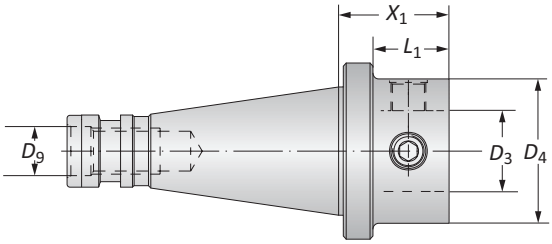

	Taper Size	Connection D_4 | D_3	Shank X_1	Shank L_1	Shank D_9	Weight	Part No.
	40	50 - 28	38.00	26.40	⅝ - 11	1.30 (kg)	**132022T004498**
	40	63 - 36	48.00	36.40	⅝ - 11	1.50 (kg)	**132066T004498**
ⓜ	50	50 - 28	42.00	26.80	1 - 8	3.00 (kg)	**132022T004480**
	50	63 - 36	52.00	36.80	1 - 8	3.50 (kg)	**132066T004480**
	50	80 - 36	52.00	36.80	1 - 8	4.00 (kg)	**132088T004480**
	50	100 - 56	90.00	74.80	1 - 8	4.90 (kg)	**132076T004480**

B10-M: 12-13

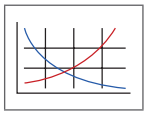

Key on B10-F: 1

B10: VI-VII

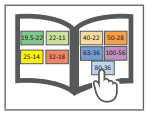

ⓜ = Metric (mm)

WARNING **Exceeding weight capacity for machine tool spindle and tool changer can cause machine damage and/or serious injury. To prevent:**
-Consult machine tool builder for machine's weight limitations.
-Refer to example on page B10-M: 11 for calculating tool assembly weight
Factory technical assistance is also available for specific applications through our Application Engineering department. *email: engineering.eu@alliedmachine.com*

WARNING **Tool failure can cause serious injury. To prevent:**
-Do not exceed recommended 10xD length-to-diameter ratio or exceed 4 total components (including shank)
-When using Alu-Line® components, do not exceed recommended 5xD length-to-diameter ratio
-When using tool steel components, do not exceed recommended 6xD length-to-diameter ratio
-When using heavy metal reducers, do not exceed recommended 8xD length-to-diameter ratio
-When using a carbide shank, do not exceed recommended 9xD length-to-diameter ratio
-When using a NOVI^{TECH}® module, do not exceed recommended 10xD length-to-diameter ratio
-Refer to examples on pages B10-M: 8-10 for calculating length-to-diameter ratio
Factory technical assistance is available for your specific applications through our Application Engineering department. *email:* **engineering.eu@alliedmachine.com**

DIN 2080 Master Shanks



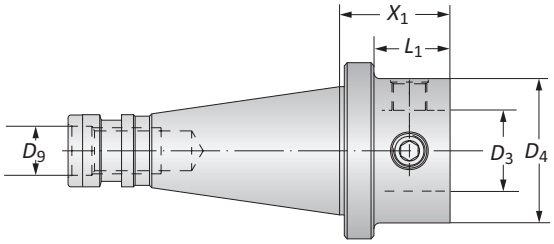

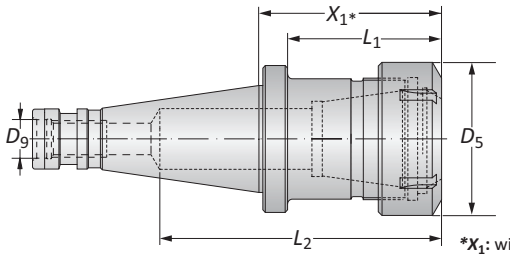

*X_1: with one piece clamping nut

	Taper Size	Connection D_4 | D_3	Shank X_1	L_1	L_2	D_5	D_9	Weight	Part No.
	40	50 - 28	38.00	26.40	–	–	M16 x 2	1.30 (kg)	**132022T010229**
	40	63 - 36	48.00	36.40	–	–	M16 x 2	1.50 (kg)	**132066T010229**
	50	50 - 28	42.00	26.80	–	–	M24 x 3	3.00 (kg)	**132022T003704**
ⓜ	50	63 - 36	52.00	36.80	–	–	M24 x 3	3.50 (kg)	**132066T003704**
	50	80 - 36	52.00	36.80	–	–	M24 x 3	4.00 (kg)	**132088T003704**
	50	100 - 56	90.00	74.80	–	–	M24 x 3	4.90 (kg)	**132076T003704**
	50	ER 40	80.00	64.80	134.00	63.00	M24 x 3	3.30 (kg)	**259084**

B10-M: 12-13

Key on B10-A:1

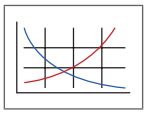

B10: VI-VII

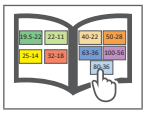

ⓜ = Metric (mm)

⚠ WARNING **Exceeding weight capacity for machine tool spindle and tool changer can cause machine damage and/or serious injury. To prevent:**
-Consult machine tool builder for machine's weight limitations.
-Refer to example on page B10-M: 11 for calculating tool assembly weight
Factory technical assistance is also available for specific applications through our Application Engineering department. *email: engineering.eu@alliedmachine.com*

⚠ WARNING **Tool failure can cause serious injury. To prevent:**
-Do not exceed recommended 10xD length-to-diameter ratio or exceed 4 total components (including shank)
-When using Alu-Line® components, do not exceed recommended 5xD length-to-diameter ratio
-When using tool steel components, do not exceed recommended 6xD length-to-diameter ratio
-When using heavy metal reducers, do not exceed recommended 8xD length-to-diameter ratio
-When using a carbide shank, do not exceed recommended 9xD length-to-diameter ratio
-When using a NOVI$^{TECH®}$ module, do not exceed recommended 10xD length-to-diameter ratio
-Refer to examples on pages B10-M: 8-10 for calculating length-to-diameter ratio
Factory technical assistance is available for your specific applications through our Application Engineering department. *email:* **engineering.eu@alliedmachine.com**

DIN 1806 Morse Taper Master Shanks | R8 Master Shanks



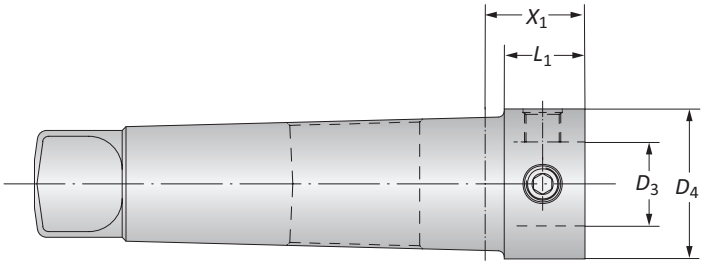

DIN 1806 Master Shanks

	Morse Taper Size	Connection D_4 | D_3	Shank X_1	Shank L_1	Weight	Part No.
ⓜ	4	50 - 28	43.00	36.50	1.10 (kg)	**132022T003590**
ⓜ	5	50 - 28	33.00	26.70	1.80 (kg)	**132022T003920**
	5	63 - 36	53.00	46.70	2.20 (kg)	**132066T003920**



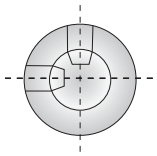

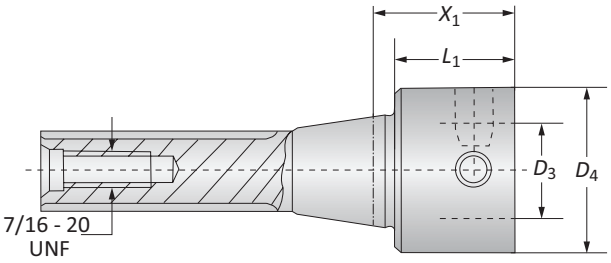

	Connection D_4 | D_3	Shank X_1	Shank L_1	Weight	Part No.
ⓜ	50 - 28	45.00	36.00	1.00 (kg)	**132022T007166**
	63 - 36	60.00	51.00	1.30 (kg)	**132066T007166**

B10-M: 12-13

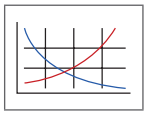

B10: VI-VII

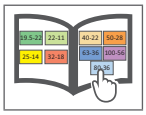

Key on B10-F: 1

ⓜ = Metric (mm)

⚠ WARNING **Exceeding weight capacity for machine tool spindle and tool changer can cause machine damage and/or serious injury. To prevent:**
-Consult machine tool builder for machine's weight limitations.
-Refer to example on page B10-M: 11 for calculating tool assembly weight
Factory technical assistance is also available for specific applications through our Application Engineering department. *email: engineering.eu@alliedmachine.com*

⚠ WARNING **Tool failure can cause serious injury. To prevent:**
-Do not exceed recommended 10xD length-to-diameter ratio or exceed 4 total components (including shank)
-When using Alu-Line® components, do not exceed recommended 5xD length-to-diameter ratio
-When using tool steel components, do not exceed recommended 6xD length-to-diameter ratio
-When using heavy metal reducers, do not exceed recommended 8xD length-to-diameter ratio
-When using a carbide shank, do not exceed recommended 9xD length-to-diameter ratio
-When using a NOVI$^{TECH®}$ module, do not exceed recommended 10xD length-to-diameter ratio
-Refer to examples on pages B10-M: 8-10 for calculating length-to-diameter ratio
Factory technical assistance is available for your specific applications through our Application Engineering department. *email:* **engineering.eu@alliedmachine.com**

Accessories

Coolant Adapter Sets | Service Keys | ISO 15488 (DIN 6499-B) Collet Chuck Accessories

Coolant Adapter Sets

HSK Shank Size	Thread	Part No.
32	M10 x 1.5 x 1.0	**262002**
40	M12 x 1.75 x 1.0	**262003**
50	M16 x 2 x 1.0	**262004**
63	M18 x 2.5 x 1.0	**262005**
80	M20 x 2.5 x 1.5	**262006**
100	M24 x 3 x 1.5	**262007**

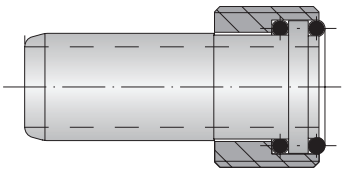

Service Keys

HSK Shank Size	*D*	Part No.
32	8.50	**315234**
40	10.50	**315235**
50	14.50	**215726**
63	16.50	**215727***
80	18.00	**415127**
100	22.00	**215728**

*Two piece

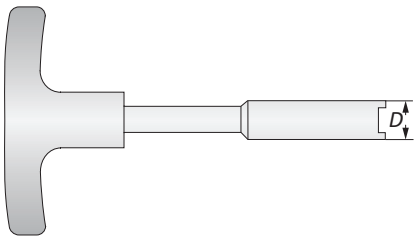

ISO 15488 (DIN 6499-B) One Piece Clamping Nut

	Nominal Size	Clamping Nut L_1	Clamping Nut D_1	Part No.
m	ER 40	25.50	63.00	**215926**

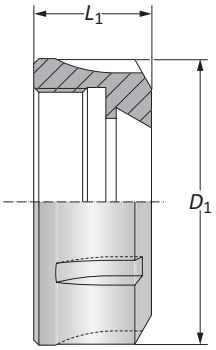

ISO 15488 (DIN 6499-B) Sealing Disk Clamping Nut

	Nominal Size	Sealing Disk Clamping Nut L_1	Sealing Disk Clamping Nut D_1	Part No.
m	ER 40	34.00	63.00	**278001**

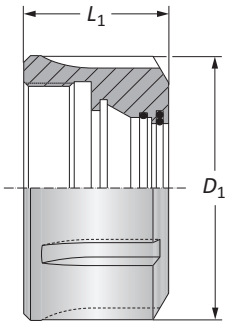

B10-M: 12-13
Key on B10-A: 1
B10: VI-VII

m = Metric (mm)

Accessories

ISO 15488 (DIN 6499-B) Collet Chuck Accessories

ISO 15488 (DIN6499-B) Collets

	Clamping Range	Collet		
	A	L_1	D_1	Part No.
ⓜ	15.00 - 14.00	46.00	40.00	**071790**
	18.00 - 17.00	46.00	40.00	**071793**
	20.00 - 19.00	46.00	40.00	**071795**
	23.00 - 22.00	46.00	40.00	**071798**

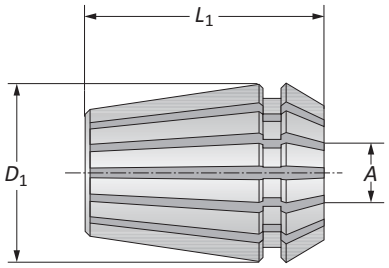

ISO 15488 (DIN 6499-B) Service Keys

		Service Key	
	Nominal Size	*D*	Part No.
ⓜ	ER 40	63.00	**215931**

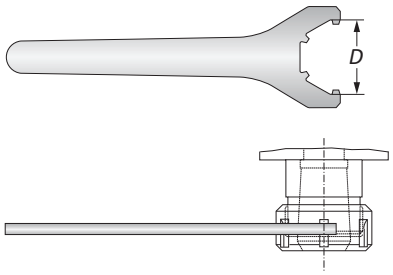

ISO 15488 (DIN 6499-B) Sealing Disks

	Clamping Range	Part No.
ⓜ	15.00 - 14.50	**278029**
	18.00 - 17.50	**278035**
	20.00 - 19.50	**278039**
	23.00 - 22.50	**278045**

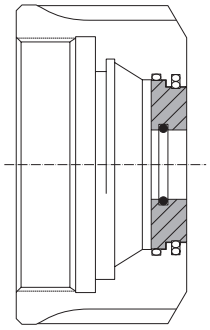

Application with clamping nuts and sealing disks when using central coolant feed:

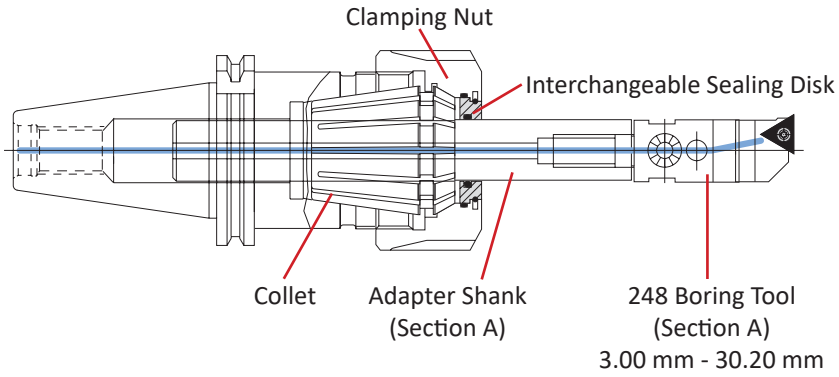

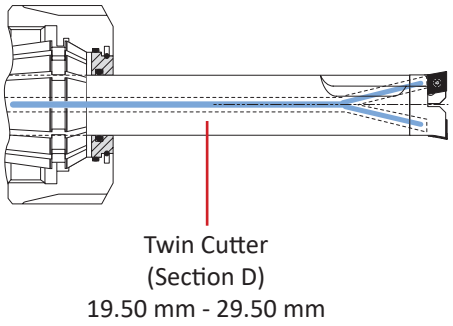

B10-M: 12-13
B10: VI-VII
Key on B10-F: 1

Accessories

Mounting Fixtures



Mounting Fixture		
Code	**Type**	**Part No.**
Basic Body*	–	**098060**
Adapter	30 Taper	**098073**
Adapter	40 Taper	**098061**
Adapter	50 Taper	**098062**
Adapter	HSK-A 32	**098063**
Adapter	HSK-A 40	**098064**
Adapter	HSK-A 50	**098065**
Adapter	HSK-A 63	**098066**
Adapter	HSK-A 80	**098067**
Adapter	HSK-A 100	**098068**
Adapter	PSC 50	**098069**
Adapter	PSC 63	**098070**
Adapter	PSC 80	**098071**

*Basic body and adapters sold separately

B10-M: 12-13



B10: VI-VII



Ⓜ = Metric (mm)

⚠ WARNING **Exceeding weight capacity for machine tool spindle and tool changer can cause machine damage and/or serious injury. To prevent:**
-Consult machine tool builder for machine's weight limitations.
-Refer to example on page B10-M: 11 for calculating tool assembly weight
Factory technical assistance is also available for specific applications through our Application Engineering department. *email: engineering.eu@alliedmachine.com*

⚠ WARNING **Tool failure can cause serious injury. To prevent:**
-Do not exceed recommended 10xD length-to-diameter ratio or exceed 4 total components (including shank)
-When using Alu-Line® components, do not exceed recommended 5xD length-to-diameter ratio
-When using tool steel components, do not exceed recommended 6xD length-to-diameter ratio
-When using heavy metal reducers, do not exceed recommended 8xD length-to-diameter ratio
-When using a carbide shank, do not exceed recommended 9xD length-to-diameter ratio
-When using a NOVI$^{TECH®}$ module, do not exceed recommended 10xD length-to-diameter ratio
-Refer to examples on pages B10-M: 8-10 for calculating length-to-diameter ratio
Factory technical assistance is available for your specific applications through our Application Engineering department. *email:* **engineering.eu@alliedmachine.com**

Notes

SECTION

B10-G

Large Diameter Boring

Wohlhaupter® Large Diameter Boring

Basic D 40 | Basic D 60 | Eco D 60 | Flex D 60

- Diameter Range: 200.00 mm - 3255.00 mm

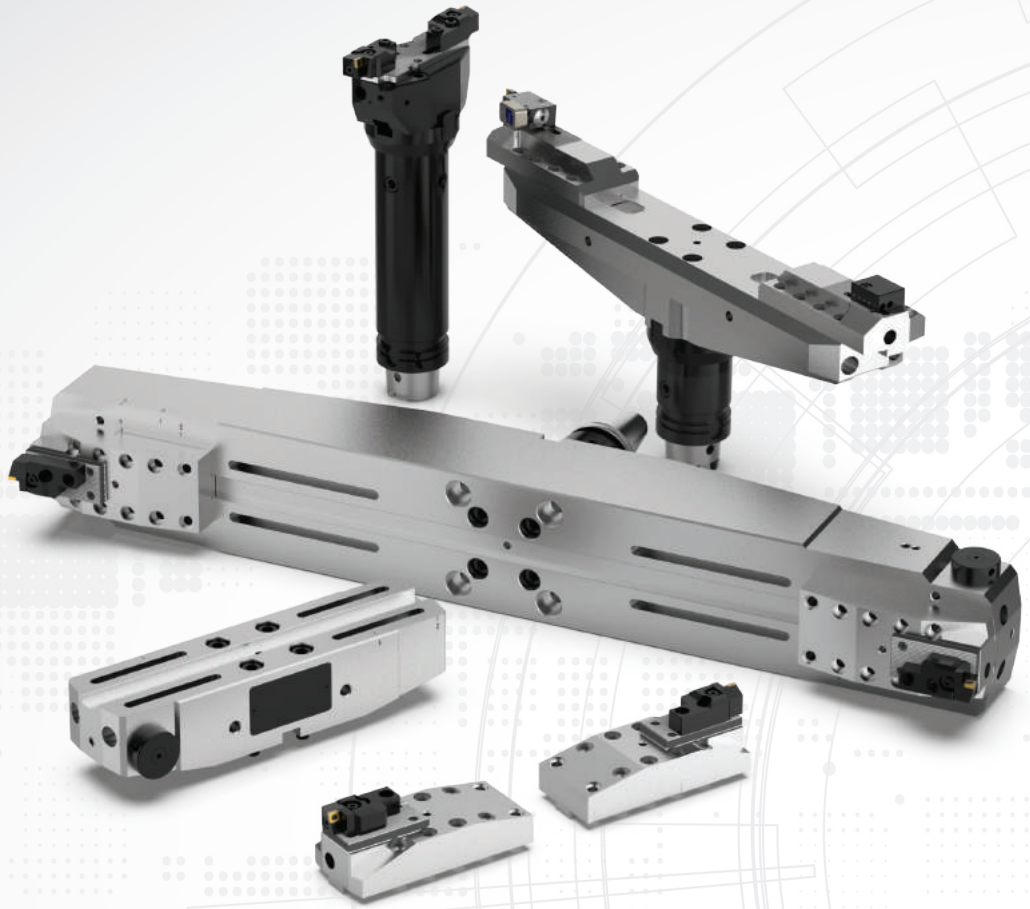

Boring Big?

Wohlhaupter has continued to expand our large diameter boring capabilities with Alu-Line. Our Alu-Line serrated slides and tool bodies are made of lightweight aluminium alloy to minimise the weight while still getting the heavy boring job done. The versatile serrated slides and serrated tool bodies allow for boring 200.00 mm up to 3255.00 mm, offering the most powerful and versatile tool ranges to our customers.

Applicable Industries

Aerospace | Agriculture | Automotive | Firearms | General Machining | Oil & Gas | Renewable Energy

Your safety and the safety of others is very important. This catalogue contains important safety messages. Always read and follow all safety precautions.



This triangle is a safety hazard symbol. It alerts you to potential safety hazards that can cause tool failure and serious injury.

When you see this symbol in the catalogue, look for a related safety message that may be near this triangle or referred to in the nearby text.

There are safety signal words also used in the catalogue. Safety messages follow these words.

⚠ WARNING

WARNING (shown above) means that failure to follow the precautions in this message could result in tool failure and serious injury.

NOTICE means that failure to follow the precautions in this message could result in damage to the tool or machine but not result in personal injury.

NOTE and **IMPORTANT** are also used. These are important that you read and follow but are not safety-related.

Visit www.alliedmachine.com for the most up-to-date information and procedures.

Reference Icons
The following icons will appear throughout the catalogue to help you navigate between products.

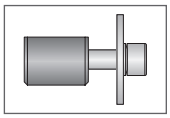

Clamping Elements
For use with insert holders and boring heads

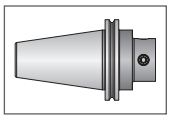

Shanks
A variety of shanks for different machines

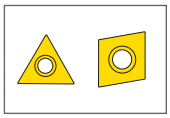

Inserts
For use with insert holder boring heads and boring bars using indexable inserts

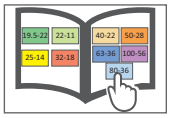

MVS Connection Colour Guide
Detailed instructions and information regarding the MVS connection(s)

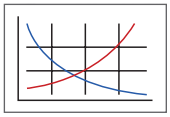

Recommended Cutting Data
Speed and feed recommendations for optimum and safe boring



Through Coolant Option
Indicates that the product is through coolant

Large Diameter Boring Table of Contents

Introduction

Product Overview . . . . . 2 - 3

Serrated Slides

Alu-Line Basic D 40 Serrated Slides 4

Alu-Line Basic D 60 Serrated Slides 5

Alu-Line Eco D 60 Serrated Slides 6

Alu-Line Flex D 60 Serrated Slides 7

Serrated Adapter with MVS Connection . . . . . 8 - 9

537 Boring Cassettes

537 Analogue Cassettes 10

537 Digital Cassettes with 3E^{TECH} 11

Insert Holders

Insert Holders for Rough Machining . . . . . 12 - 13

Insert Holders for Height Adjustments and Axial Grooving 14

Holding Arbors and Shanks

MVS Holding Arbors D40/D60 15

Master Shanks D40/D60 . . . . . 16 - 19

Accessories . . . . . 20 - 25

Series	Diameter Range Metric (mm)
Basic D 40 Slides	200.00 - 520.00
Basic D 60 Slides	200.00 - 505.00
Eco D 60 Slides	465.00 - 1020.00
Flex D 60 Slides	500.00 - 3255.00



Large Diameter BORING

Boring big? We've got you covered.

Our versatile tooling system can provide the power and precision your large diameter boring jobs demand. The large diameter boring system offers four different Alu-Line serrated slides, a wide range of rough and finish boring insert holders, vernier and digital cassettes, and combined rough and finish insert holders.

- Diameter range: 200.00 mm - 3255.00 mm
- Basic, Eco, and Flex serrated slides
- Roughing, finishing, or combined roughing and finishing can be achieved in one pass
- Digital readout cassettes available for quick and easy adjustments
- Alu-Line serrated slides and tool bodies are made of lightweight aluminium

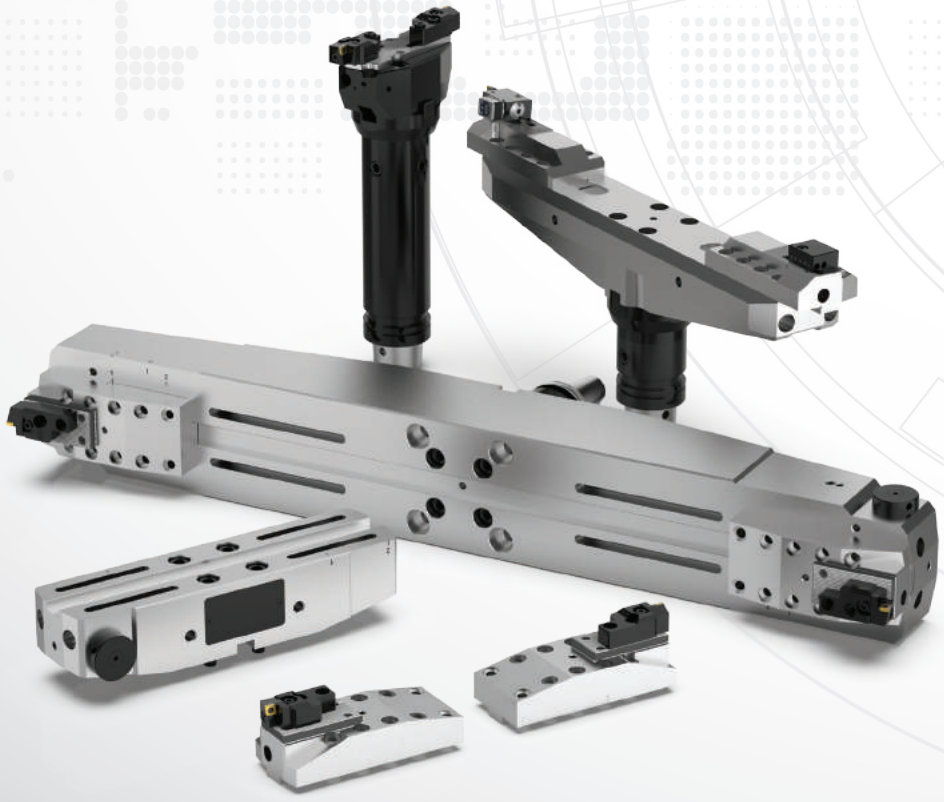

Basic D 40 Serrated Slides for Finish Boring



349021
Ø 200.00 mm – 280.00 mm



349023
Ø 360.00 mm – 440.00 mm



349022
Ø 280.00 mm – 360.00 mm



349024
Ø 440.00 mm – 520.00 mm

Basic D 60 Serrated Slides for Rough and Finish Boring



349051
Ø 200.00 mm – 280.00 mm

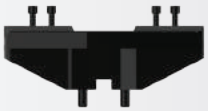

349053
Ø 350.00 mm – 430.00 mm

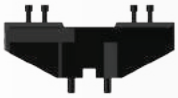

349052
Ø 275.00 mm – 355.00 mm



349054
Ø 425.00 mm – 505.00 mm

Eco D 60 Serrated Slides for Rough and Finish Boring

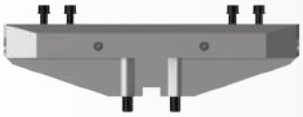

349005
Ø 465.00 mm – 745.00 mm



349014 / 350015
Serrated slide for base slides
349005 / 349006

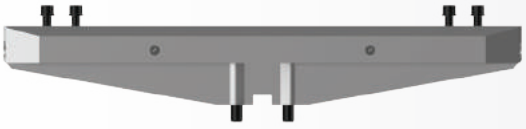

349006
Ø 740.00 mm – 1020.00 mm

Flex D 60 Serrated Slides for Rough and Finish Boring



349031
Ø 500.00 mm – 1055.00 mm



349035
Serrated slide for base slides
349031 | 349032
349033 | 349034



349032
Ø 755.00 mm – 1605.00 mm



349036
Serrated slide for base slides
349031 | 349032
349033 | 349034



349033
Ø 1325.00 mm – 2430.00 mm



349037
Serrated slide for base slides
349032 | 349033
349034

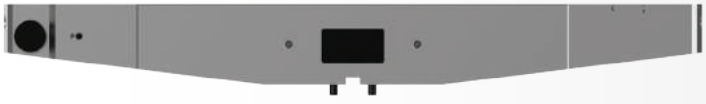

349034
Ø 2150.00 mm – 3255.00 mm



349038
Serrated slide for base slides
349033 | 349034

Alu-Line Basic D 40 Serrated Slides

Diameter Range: 200.00 mm - 520.00 mm



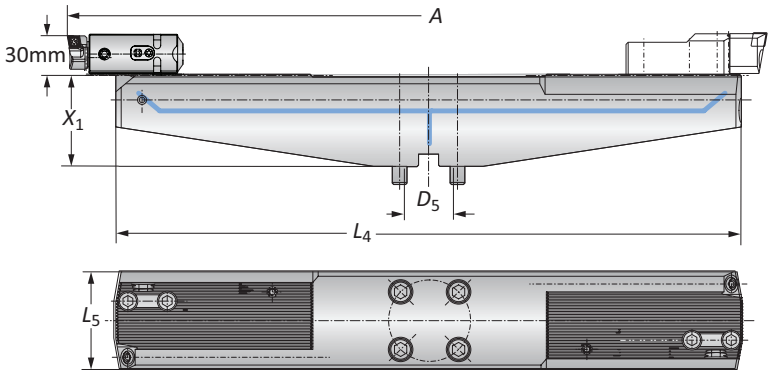

	Connection	Boring Range	Serrated Slide				
	D_5	A	X_1	L_4	L_5	Weight	Part No.
ⓜ	D 40	200.00 - 280.00	75.00	190.00	80.00	2.80 (kg)	**349021**
ⓜ	D 40	280.00 - 360.00	75.00	270.00	80.00	3.80 (kg)	**349022**
ⓜ	D 40	360.00 - 440.00	75.00	350.00	80.00	5.00 (kg)	**349023**
ⓜ	D 40	440.00 - 520.00	75.00	430.00	80.00	6.00 (kg)	**349024**

B10-M: 12-13 | B10-G: 22 | B10-G: 16-19 | B10-H | B10: VI-VII

Key on B10-G: 1

ⓜ = Metric (mm)

⚠ WARNING **Exceeding weight capacity for machine tool spindle and tool changer can cause machine damage and/or serious injury. To prevent:**
-Consult machine tool builder for machine's weight limitations.
-Refer to example on page B10-M: 11 for calculating tool assembly weight
Factory technical assistance is also available for specific applications through our Application Engineering department. *email:* **engineering.eu@alliedmachine.com**

⚠ WARNING **Tool failure can cause serious injury. To prevent:**
-Do not exceed recommended 10xD length-to-diameter ratio or exceed 4 total components (including shank)
-When using Alu-Line® components, do not exceed recommended 5xD length-to-diameter ratio
-When using tool steel components, do not exceed recommended 6xD length-to-diameter ratio
-When using heavy metal components, do not exceed recommended 8xD length-to-diameter ratio
-When using a carbide shank, do not exceed recommended 9xD length-to-diameter ratio
-When using a NOVI^{TECH} module, do not exceed recommended 10xD length-to-diameter ratio
-Refer to examples on pages B10-M: 8-10 for calculating length-to-diameter ratio
Factory technical assistance is available for your specific applications through our Application Engineering department. *email:* **engineering.eu@alliedmachine.com**

Alu-Line Basic D 60 Serrated Slides

Diameter Range: 200.00 mm - 505.00 mm



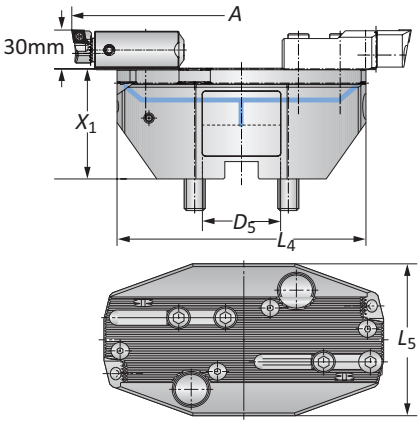

	Connection	Boring Range	Serrated Slide				
	D_5	A	X_1	L_4	L_5	Weight	Part No.
	D 60	200.00 - 280.00	85.00	191.00	110.00	4.10 (kg)	**349051**
ⓜ	D 60	275.00 - 355.00	85.00	264.00	110.00	5.20 (kg)	**349052**
	D 60	350.00 - 430.00	85.00	339.00	125.00	6.90 (kg)	**349053**
	D 60	425.00 - 505.00	85.00	414.00	125.00	8.00 (kg)	**349054**

B10-M: 12-13 | B10-G: 23 | B10-G: 16-19 | B10-H | B10: VI-VII

Key on B10-G: 1

ⓜ = Metric (mm)

⚠ WARNING **Exceeding weight capacity for machine tool spindle and tool changer can cause machine damage and/or serious injury. To prevent:**
-Consult machine tool builder for machine's weight limitations.
-Refer to example on page B10-M: 11 for calculating tool assembly weight
Factory technical assistance is also available for specific applications through our Application Engineering department. *email:* **engineering.eu@alliedmachine.com**

⚠ WARNING **Tool failure can cause serious injury. To prevent:**
-Do not exceed recommended 10xD length-to-diameter ratio or exceed 4 total components (including shank)
-When using Alu-Line® components, do not exceed recommended 5xD length-to-diameter ratio
-When using tool steel components, do not exceed recommended 6xD length-to-diameter ratio
-When using heavy metal components, do not exceed recommended 8xD length-to-diameter ratio
-When using a carbide shank, do not exceed recommended 9xD length-to-diameter ratio
-When using a NOVI^{TECH} module, do not exceed recommended 10xD length-to-diameter ratio
-Refer to examples on pages B10-M: 8-10 for calculating length-to-diameter ratio
Factory technical assistance is available for your specific applications through our Application Engineering department. *email:* **engineering.eu@alliedmachine.com**

Alu-Line Eco D 60 Serrated Slides

Diameter Range: 465.00 mm - 1020.00 mm



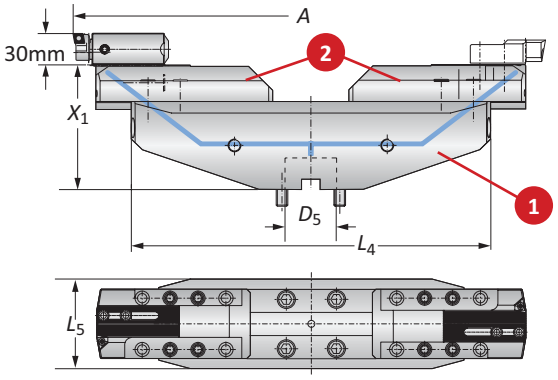

	Connection	Boring Range	Serrated Slide			1 Base Slide		2 Serrated Slide (Alu-Line)*		2 Serrated Slide (steel)**	
	D_5	A	X_1	L_4	L_5	Weight	Part No.	Weight	Part No.	Weight	Part No.
ⓜ	D 60	465.00 - 745.00	155.00	447.00	129.00	11.80 (kg)	**349005**	2.20 (kg)	**349015**	5.70 (kg)	**349014**
	D 60	740.00 - 1020.00	155.00	722.00	129.00	18.00 (kg)	**349006**	2.20 (kg)	**349015**	5.70 (kg)	**349014**

*Finish boring: serrated slide in Alu-Line
**Rough boring: serrated slide in steel

B10-M: 12-13 | B10-G: 24 | B10-G: 16-19 | B10-H | B10: VI-VII

Key on B10-G: 1

ⓜ = Metric (mm)

WARNING **Exceeding weight capacity for machine tool spindle and tool changer can cause machine damage and/or serious injury. To prevent:**
-Consult machine tool builder for machine's weight limitations.
-Refer to example on page B10-M: 11 for calculating tool assembly weight
Factory technical assistance is also available for specific applications through our Application Engineering department. *email:* **engineering.eu@alliedmachine.com**

WARNING **Tool failure can cause serious injury. To prevent:**
-Do not exceed recommended 10xD length-to-diameter ratio or exceed 4 total components (including shank)
-When using Alu-Line® components, do not exceed recommended 5xD length-to-diameter ratio
-When using tool steel components, do not exceed recommended 6xD length-to-diameter ratio
-When using heavy metal components, do not exceed recommended 8xD length-to-diameter ratio
-When using a carbide shank, do not exceed recommended 9xD length-to-diameter ratio
-When using a NOVI^{TECH} module, do not exceed recommended 10xD length-to-diameter ratio
-Refer to examples on pages B10-M: 8-10 for calculating length-to-diameter ratio
Factory technical assistance is available for your specific applications through our Application Engineering department. *email:* **engineering.eu@alliedmachine.com**

Alu-Line Flex D 60 Serrated Slides

Diameter Range: 500.00 mm - 3255.00 mm



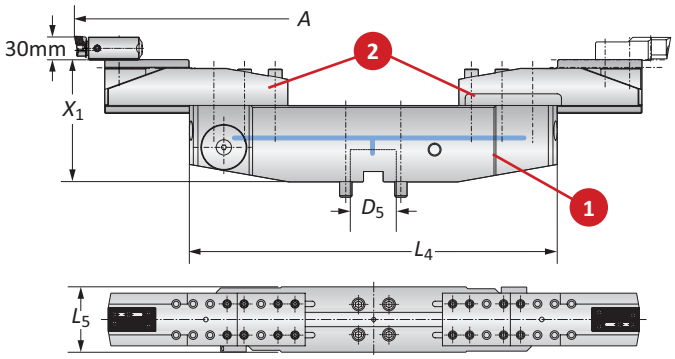

	Connection	Boring Range	Serrated Slide				Part No.	
	D_5	A	X_1	L_4	L_5	Weight (1 + 2)	1 Base Slide	2 Serrated Slide
	D 60	500.00 - 780.00	160.00	480.00	130.00	24.20 (kg)	**349031**	**349035**
	D 60	950.00 - 1055.00	185.00	480.00	130.00	41.30 (kg)	**349031**	**349036**
	D 60	775.00 - 1055.00	185.00	755.00	155.00	42.50 (kg)	**349032**	**349035**
	D 60	1050.00 - 1330.00	210.00	755.00	155.00	59.60 (kg)	**349032**	**349036**
	D 60	1442.00 - 1605.00	225.00	755.00	155.00	86.30 (kg)	**349032**	**349037**
	D 60	1325.00 - 1605.00	210.00	1305.00	185.00	88.20 (kg)	**349033**	**349035**
ⓜ	D 60	1325.00 - 1880.00	235.00	1305.00	185.00	105.30 (kg)	**349033**	**349036**
	D 60	1600.00 - 2155.00	250.00	1305.00	185.00	132.00 (kg)	**349033**	**349037**
	D 60	1990.00 - 2430.00	255.00	1305.00	185.00	169.80 (kg)	**349033**	**349038**
	D 60	2150.00 - 2430.00	235.00	2130.00	225.00	192.50 (kg)	**349034**	**349035**
	D 60	2150.00 - 2705.00	260.00	2130.00	225.00	209.60 (kg)	**349034**	**349036**
	D 60	2150.00 - 2980.00	275.00	2130.00	225.00	236.00 (kg)	**349034**	**349037**
	D 60	2150.00 - 3255.00	280.00	2130.00	225.00	274.00 (kg)	**349034**	**349038**

B10-M: 12-13 | B10-G: 25 | B10-G: 16-19 | B10-H | B10: VI-VII

Key on B10-G: 1

ⓜ = Metric (mm)

⚠ WARNING **Exceeding weight capacity for machine tool spindle and tool changer can cause machine damage and/or serious injury. To prevent:**
-Consult machine tool builder for machine's weight limitations.
-Refer to example on page B10-M: 11 for calculating tool assembly weight
Factory technical assistance is also available for specific applications through our Application Engineering department. *email:* **engineering.eu@alliedmachine.com**

⚠ WARNING **Tool failure can cause serious injury. To prevent:**
-Do not exceed recommended 10xD length-to-diameter ratio or exceed 4 total components (including shank)
-When using Alu-Line® components, do not exceed recommended 5xD length-to-diameter ratio
-When using tool steel components, do not exceed recommended 6xD length-to-diameter ratio
-When using heavy metal components, do not exceed recommended 8xD length-to-diameter ratio
-When using a carbide shank, do not exceed recommended 9xD length-to-diameter ratio
-When using a NOVI^{TECH} module, do not exceed recommended 10xD length-to-diameter ratio
-Refer to examples on pages B10-M: 8-10 for calculating length-to-diameter ratio
Factory technical assistance is available for your specific applications through our Application Engineering department. *email:* **engineering.eu@alliedmachine.com**

Serrated Adapter with MVS Connection

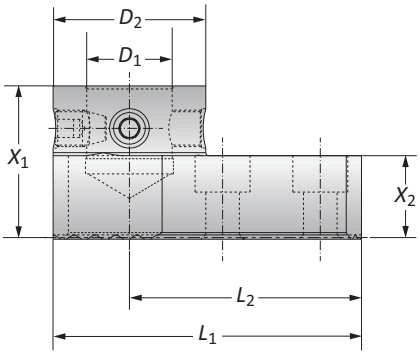

Mounting Adapter

MVS Connection	Mounting Adapters					
D_2 | D_1	X_1	X_2	L_1	L_2	Weight	Part No.
Ⓜ 50 - 28	50.00	27.00	101.00	76.00	1.30 (kg)	**349046**





Inside Boring

Slide	Boring Heads	ID Bore Range mm
349051	310005/464006/564045	215.00 - 313.00
349052	310005/464006/564045	290.00 - 388.00
349053	310005/464006/564045	365.00 - 463.00
349054	310005/464006/564045	440.00 - 538.00
349005 with 349015	310005/464006/564045	480.00 - 778.00

Outside Boring

Slide	Boring Heads	OD Bore Range mm
349051	310005/464006/565045	67.00 - 165.00
349052	310005/464006/565045	142.00 - 240.00
349053	310005/464006/565045	217.00 - 315.00
349054	310005/464006/565045	292.00 - 390.00
349005 with 349015	310005/464006/565045	332.00 - 630.00

NOTE: LH only spindle rotation

B10-M: 12-13

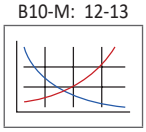

B10: VI-VII

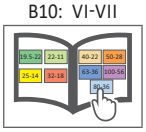

Key on B10-G: 1

Ⓜ = Metric (mm)

⚠ WARNING **Exceeding weight capacity for machine tool spindle and tool changer can cause machine damage and/or serious injury. To prevent:**
-Consult machine tool builder for machine's weight limitations.
-Refer to example on page B10-M: 11 for calculating tool assembly weight
Factory technical assistance is also available for specific applications through our Application Engineering department. *email:* **engineering.eu@alliedmachine.com**

⚠ WARNING **Tool failure can cause serious injury. To prevent:**
-Do not exceed recommended 10xD length-to-diameter ratio or exceed 4 total components (including shank)
-When using Alu-Line® components, do not exceed recommended 5xD length-to-diameter ratio
-When using tool steel components, do not exceed recommended 6xD length-to-diameter ratio
-When using heavy metal components, do not exceed recommended 8xD length-to-diameter ratio
-When using a carbide shank, do not exceed recommended 9xD length-to-diameter ratio
-When using a NOVI^{TECH} module, do not exceed recommended 10xD length-to-diameter ratio
-Refer to examples on pages B10-M: 8-10 for calculating length-to-diameter ratio
Factory technical assistance is available for your specific applications through our Application Engineering department. *email:* **engineering.eu@alliedmachine.com**

Serrated Adapter with MVS Connection

Mounting Adapter

MVS Connection	Mounting Adapters						
	D_2 | D_1	X_1	X_2	L_1	L_2	Weight	Part No.
ⓜ	50 - 28	50.00	27.00	101.00	76.00	1.30 (kg)	**349046**

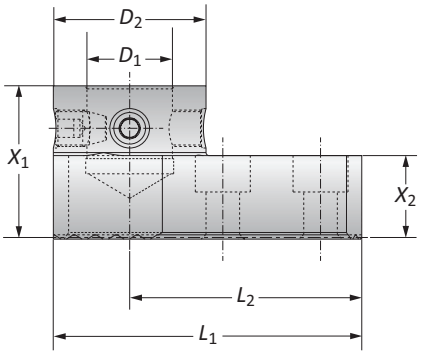



Inside Boring

Slide	Boring Heads	ID Bore Range mm
349051	310005/464006/564045	65.00 -128.00
349052	310005/464006/564045	105.00 - 203.00
349053	310005/464006/564045	180.00 - 278.00
349054	310005/464006/564045	255.00 - 353.00
349005 with 349015	310005/464006/564045	295.00 - 593.00



Outside Boring

Slide	Boring Heads	OD Bore Range mm
349051	310005/464006/564045	–
349052	310005/464006/564045	0.00 - 55.00
349053	310005/464006/564045	32.00 - 130.00
349054	310005/464006/564045	107.00 - 205.00
349005 with 349015	310005/464006/564045	147.00 - 445.00

NOTE: LH only spindle rotation

B10-M: 12-13

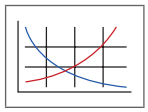

Key on B10-G: 1

B10: VI-VII

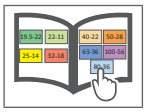

ⓜ = Metric (mm)

⚠ WARNING **Exceeding weight capacity for machine tool spindle and tool changer can cause machine damage and/or serious injury. To prevent:**
-Consult machine tool builder for machine's weight limitations.
-Refer to example on page B10-M: 11 for calculating tool assembly weight
Factory technical assistance is also available for specific applications through our Application Engineering department. *email:* **engineering.eu@alliedmachine.com**

⚠ WARNING **Tool failure can cause serious injury. To prevent:**
-Do not exceed recommended 10xD length-to-diameter ratio or exceed 4 total components (including shank)
-When using Alu-Line® components, do not exceed recommended 5xD length-to-diameter ratio
-When using tool steel components, do not exceed recommended 6xD length-to-diameter ratio
-When using heavy metal components, do not exceed recommended 8xD length-to-diameter ratio
-When using a carbide shank, do not exceed recommended 9xD length-to-diameter ratio
-When using a NOVI^{TECH} module, do not exceed recommended 10xD length-to-diameter ratio
-Refer to examples on pages B10-M: 8-10 for calculating length-to-diameter ratio
Factory technical assistance is available for your specific applications through our Application Engineering department. *email:* **engineering.eu@alliedmachine.com**

537 Analogue Cassettes

Diameter Range: 100.00 mm - 3255.00 mm



Form 101

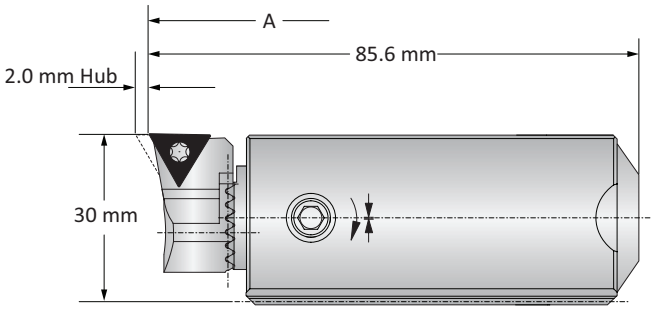

Form 20

	Slide Type	Boring Range A	Weight	Insert Form	Part No. Insert Holder	Clamping Piece	Cassette
	Serrated Tool Bodies	100.00 - 205.00	0.60 (kg)	20	**210020**	**137026**	**537051**
		100.00 - 205.00	0.60 (kg)	101	**210063**	**137026**	**537051**
		100.00 - 205.00	0.60 (kg)	103	**210064**	**137026**	**537051**
ⓜ	Basic / Eco Slides	200.00 - 1020.00	0.60 (kg)	20	**210020**	**137027**	**537051**
ⓜ		200.00 - 1020.00	0.60 (kg)	101	**210063**	**137027**	**537051**
ⓜ		200.00 - 1020.00	0.60 (kg)	103	**210064**	**137027**	**537051**
	Flex Slides	500.00 - 3255.00	0.60 (kg)	20	**210020**	**137019**	**537051**
		500.00 - 3255.00	0.60 (kg)	101	**210063**	**137019**	**537051**
		500.00 - 3255.00	0.60 (kg)	103	**210064**	**137019**	**537051**

B10-M: 12-13 | B10-G: 20-21 | B10-G: 16-19 | B10-H | B10: VI-VII

Key on B10-G: 1

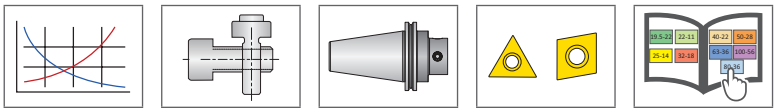

ⓜ = Metric (mm)

Inserts sold separately

⚠ WARNING **Exceeding weight capacity for machine tool spindle and tool changer can cause machine damage and/or serious injury. To prevent:**
-Consult machine tool builder for machine's weight limitations.
-Refer to example on page B10-M: 11 for calculating tool assembly weight
Factory technical assistance is also available for specific applications through our Application Engineering department. *email:* **engineering.eu@alliedmachine.com**

⚠ WARNING **Tool failure can cause serious injury. To prevent:**
-Do not exceed recommended 10xD length-to-diameter ratio or exceed 4 total components (including shank)
-When using Alu-Line® components, do not exceed recommended 5xD length-to-diameter ratio
-When using tool steel components, do not exceed recommended 6xD length-to-diameter ratio
-When using heavy metal components, do not exceed recommended 8xD length-to-diameter ratio
-When using a carbide shank, do not exceed recommended 9xD length-to-diameter ratio
-When using a NOVI^{TECH} module, do not exceed recommended 10xD length-to-diameter ratio
-Refer to examples on pages B10-M: 8-10 for calculating length-to-diameter ratio
Factory technical assistance is available for your specific applications through our Application Engineering department. *email:* **engineering.eu@alliedmachine.com**

537 Digital Cassettes with 3E^{TECH+}

Diameter Range: 100.00 mm - 3255.00 mm



Form 101

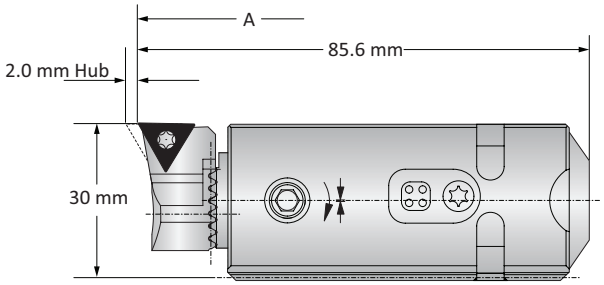

Form 20

	Slide Type	Boring Range A	Weight	Insert Form	Part No. Insert Holder	Clamping Pieces	Cassette
	Serrated Tool Bodies	100.00 - 205.00	0.60 (kg)	20	**210020**	**137026**	**537052**
		100.00 - 205.00	0.60 (kg)	101	**210063**	**137026**	**537052**
		100.00 - 205.00	0.60 (kg)	103	**210064**	**137026**	**537052**
ⓜ	Basic / Eco Slides	200.00 - 1020.00	0.60 (kg)	20	**210020**	**137027**	**537052**
ⓜ		200.00 - 1020.00	0.60 (kg)	101	**210063**	**137027**	**537052**
ⓜ		200.00 - 1020.00	0.60 (kg)	103	**210064**	**137027**	**537052**
	Flex Slides	500.00 - 3255.00	0.60 (kg)	20	**210020**	**137019**	**537052**
		500.00 - 3255.00	0.60 (kg)	101	**210063**	**137019**	**537052**
		500.00 - 3255.00	0.60 (kg)	103	**210064**	**137019**	**537052**

3E^{TECH+} Digital Readout Module

Part No.	Charging Unit*
536015	**536016**

NOTE: WEEE-Reg.-Nr. DE 15820388
*Charging unit sold separately



NOTE: 3E^{TECH+} adjustment accuracy of 0.001 mm on diameter

B10-M: 12-13 | B10-G: 20-21 | B10-G: 16-19 | B10-H | B10: VI-VII

Key on B10-G: 1

ⓜ = Metric (mm)
Inserts sold separately

⚠ WARNING **Exceeding weight capacity for machine tool spindle and tool changer can cause machine damage and/or serious injury. To prevent:**
-Consult machine tool builder for machine's weight limitations.
-Refer to example on page B10-M: 11 for calculating tool assembly weight
Factory technical assistance is also available for specific applications through our Application Engineering department. *email:* **engineering.eu@alliedmachine.com**

⚠ WARNING **Tool failure can cause serious injury. To prevent:**
-Do not exceed recommended 10xD length-to-diameter ratio or exceed 4 total components (including shank)
-When using Alu-Line® components, do not exceed recommended 5xD length-to-diameter ratio
-When using tool steel components, do not exceed recommended 6xD length-to-diameter ratio
-When using heavy metal components, do not exceed recommended 8xD length-to-diameter ratio
-When using a carbide shank, do not exceed recommended 9xD length-to-diameter ratio
-When using a NOVI^{TECH} module, do not exceed recommended 10xD length-to-diameter ratio
-Refer to examples on pages B10-M: 8-10 for calculating length-to-diameter ratio
Factory technical assistance is available for your specific applications through our Application Engineering department. *email:* **engineering.eu@alliedmachine.com**

Insert Holders for Rough Machining

90° Insert Holders

	Insert Holder K	Insert Holder X_1	Weight	ISO Code	Insert Form	Part No.
ⓜ	90°	30.00	0.60 (kg)	CC..09T3..	103	**149090**
ⓜ	90°	30.00	0.60 (kg)	CC..1204..	104	**149099**
ⓜ	90°	29.30	0.60 (kg)	CC..1204..	104	**149083**
ⓜ	90°	30.00	0.60 (kg)	CC..1605..	105	**149093**

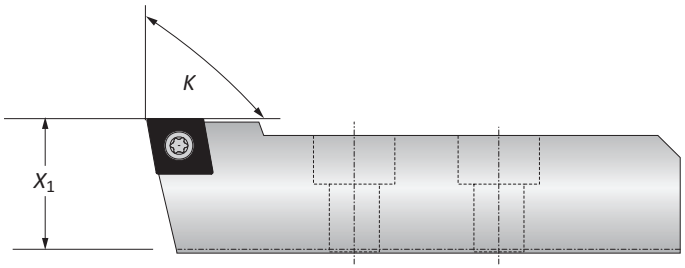

90° Tangential Insert Holders

	Insert Holder K	Insert Holder X_1	Weight	ISO Code	Insert Form	Part No.
ⓜ	90°	30.00	0.60 (kg)	Tangential	05	**149010**
ⓜ	90°	29.30	0.60 (kg)	Tangential	05	**149020**

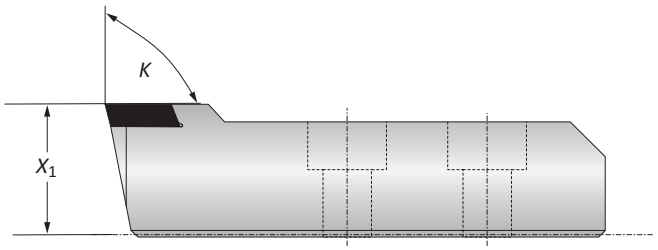

80° Insert Holders

	Insert Holder K	Insert Holder X_1	Weight	ISO Code	Insert Form	Part No.
ⓜ	80°	30.00	0.60 (kg)	SC..1204..	113	**149089**
ⓜ	80°	30.00	0.60 (kg)	SC..150512	114	**149094**
ⓜ	80°	30.00	0.60 (kg)	SN..1506..	134	**149096**

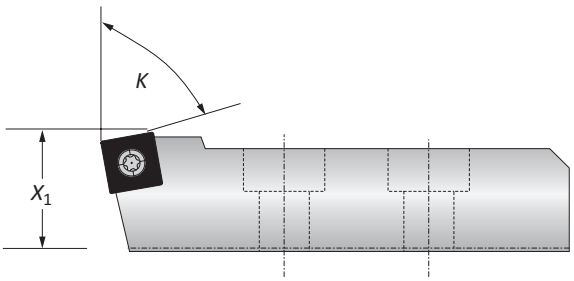

Key on B10-G: 1
B10-M: 12-13
B10-G: 22-25
B10-G: 16-19
B10-H
B10: VI-VII

ⓜ = Metric (mm)

Inserts sold separately

⚠ WARNING **Exceeding weight capacity for machine tool spindle and tool changer can cause machine damage and/or serious injury. To prevent:**
-Consult machine tool builder for machine's weight limitations.
-Refer to example on page B10-M: 11 for calculating tool assembly weight
Factory technical assistance is also available for specific applications through our Application Engineering department. *email:* **engineering.eu@alliedmachine.com**

⚠ WARNING **Tool failure can cause serious injury. To prevent:**
-Do not exceed recommended 10xD length-to-diameter ratio or exceed 4 total components (including shank)
-When using Alu-Line® components, do not exceed recommended 5xD length-to-diameter ratio
-When using tool steel components, do not exceed recommended 6xD length-to-diameter ratio
-When using heavy metal components, do not exceed recommended 8xD length-to-diameter ratio
-When using a carbide shank, do not exceed recommended 9xD length-to-diameter ratio
-When using a NOVI^{TECH} module, do not exceed recommended 10xD length-to-diameter ratio
-Refer to examples on pages B10-M: 8-10 for calculating length-to-diameter ratio
Factory technical assistance is available for your specific applications through our Application Engineering department. *email:* **engineering.eu@alliedmachine.com**

Insert Holders for Rough Machining | Boring Range Examples

Chamfering Insert Holders

	Insert Holder K	X_1	A / A_1	W	Weight	ISO Code	Insert Form	Part No.
m	15°	30.00	+7.00	4.00	0.60 (kg)	TC..16T3..	163	**201065**
m	20°	30.00	+9.00	5.30	0.60 (kg)	TC..16T3..	163	**201025**
m	30°	30.00	+14.00	7.70	0.60 (kg)	TC..16T3..	163	**201075**
m	45°	30.00	+20.00	9.90	0.60 (kg)	SC..1505..	114	**201015**

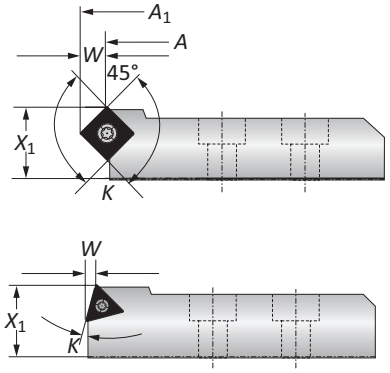

Back-Boring Insert Holders

	Insert Holder K	X_1	X_2	A	Weight	ISO Code	Insert Form	Part No.
m	90°	30.00	5.00	+40.00	0.80 (kg)	CC..1204..	104	**251010**
m	90°	30.00	5.00	+75.00	0.90 (kg)	CC..1204..	104	**251011**

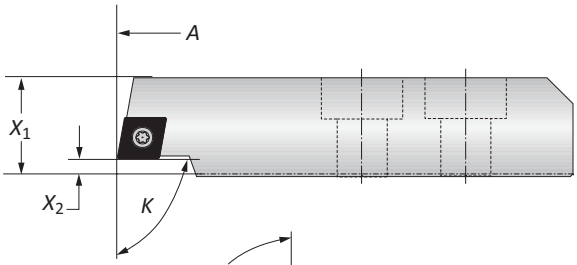

OD Turning Insert Holders

	Insert Holder K	X_1	L_1	A	Weight	ISO Code	Insert Form	Part No.
m	90°	90.00	62.00	-50.00	1.00 (kg)	CC..1204..	104	**149040**

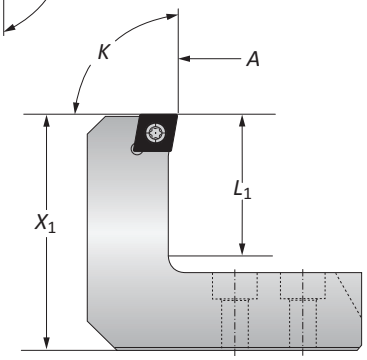

Boring Range Examples

	Serrated Slide Part No.	Bore Range	Insert Holder Part No.	Modified Bore Range	Total Bore Range
m	349051	200.00 - 280.00	201065	+7.00	207.00 - 287.00
m	349051	200.00 - 280.00	251010	+40.00	240.00 - 320.00
m	349051	200.00 - 280.00	149040	-50.00	150.00 - 230.00

NOTE: Boring range for serrated slides or base slides are found on pg. B10-G: 4 - 7
NOTE: Additional insert holders available upon request

Key on B10-G: 1
B10-M: 12-13 | B10-G: 22-25 | B10-G: 16-19 | B10-H | B10: VI-VII

m = Metric (mm)
Inserts sold separately

WARNING **Exceeding weight capacity for machine tool spindle and tool changer can cause machine damage and/or serious injury. To prevent:**
-Consult machine tool builder for machine's weight limitations.
-Refer to example on page B10-M: 11 for calculating tool assembly weight
Factory technical assistance is also available for specific applications through our Application Engineering department. *email:* **engineering.eu@alliedmachine.com**

WARNING **Tool failure can cause serious injury. To prevent:**
-Do not exceed recommended 10xD length-to-diameter ratio or exceed 4 total components (including shank)
-When using Alu-Line® components, do not exceed recommended 5xD length-to-diameter ratio
-When using tool steel components, do not exceed recommended 6xD length-to-diameter ratio
-When using heavy metal components, do not exceed recommended 8xD length-to-diameter ratio
-When using a carbide shank, do not exceed recommended 9xD length-to-diameter ratio
-When using a NOVI^{TECH} module, do not exceed recommended 10xD length-to-diameter ratio
-Refer to examples on pages B10-M: 8-10 for calculating length-to-diameter ratio
Factory technical assistance is available for your specific applications through our Application Engineering department. *email:* **engineering.eu@alliedmachine.com**

Insert Holders for Height Adjustments and Axial Grooving

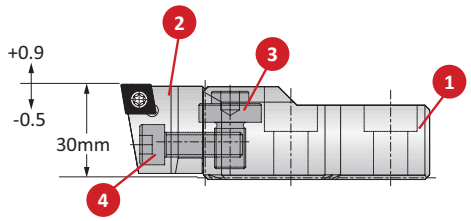

Insert Form 103

	Boring Range	1 Support Part No.	2 Insert Holder Insert Form	2 Insert Holder Part No.	3 Adjusting Screw Part No.	3 Adjusting Screw Service Key	4 Fixing Screw Part No.	4 Fixing Screw Service Key
m	200.00 - 3255.00	149055	103	149058	315355	s6 / B	070369	s6 / B

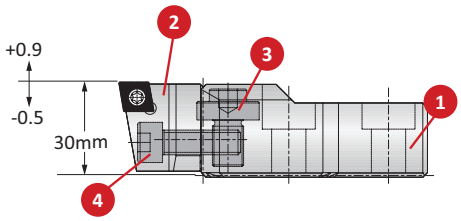

Insert Form 104

	Boring Range	1 Support Part No.	2 Insert Holder Insert Form	2 Insert Holder Part No.	3 Adjusting Screw Part No.	3 Adjusting Screw Service Key	4 Fixing Screw Part No.	4 Fixing Screw Service Key
m	200.00 - 3255.00	149055	104	149056	315355	s6 / B	070369	s6 / B

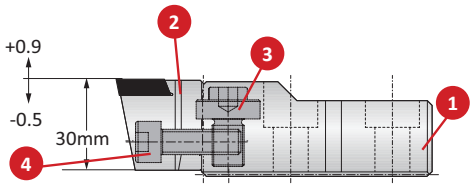

Insert Form 05

	Boring Range	1 Support Part No.	2 Insert Holder Insert Form	2 Insert Holder Part No.	3 Adjusting Screw Part No.	3 Adjusting Screw Service Key	4 Fixing Screw Part No.	4 Fixing Screw Service Key
m	200.00 - 3255.00	149055	05	149085	315355	s6 / B	070369	s6 / B

Insert Holder for Axial Grooving

	Insert Holder X_1	1 Support Part No.	2 Insert Holder Part No.	Weight	Insert Form
m	40.00	226014	226031	0.30 (kg)	304

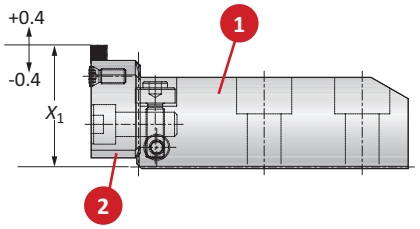

B10-M: 12-13 | B10-G: 22-25 | B10-G: 16-19 | B10-H | B10: VI-VII

Key on B10-G: 1

m = Metric (mm)

Inserts sold separately

WARNING **Exceeding weight capacity for machine tool spindle and tool changer can cause machine damage and/or serious injury. To prevent:**
-Consult machine tool builder for machine's weight limitations.
-Refer to example on page B10-M: 11 for calculating tool assembly weight
Factory technical assistance is also available for specific applications through our Application Engineering department. *email:* **engineering.eu@alliedmachine.com**

WARNING **Tool failure can cause serious injury. To prevent:**
-Do not exceed recommended 10xD length-to-diameter ratio or exceed 4 total components (including shank)
-When using Alu-Line® components, do not exceed recommended 5xD length-to-diameter ratio
-When using tool steel components, do not exceed recommended 6xD length-to-diameter ratio
-When using heavy metal components, do not exceed recommended 8xD length-to-diameter ratio
-When using a carbide shank, do not exceed recommended 9xD length-to-diameter ratio
-When using a NOVI^{TECH} module, do not exceed recommended 10xD length-to-diameter ratio
-Refer to examples on pages B10-M: 8-10 for calculating length-to-diameter ratio
Factory technical assistance is available for your specific applications through our Application Engineering department. *email:* **engineering.eu@alliedmachine.com**

MVS Holding Arbors D 40 / D 60



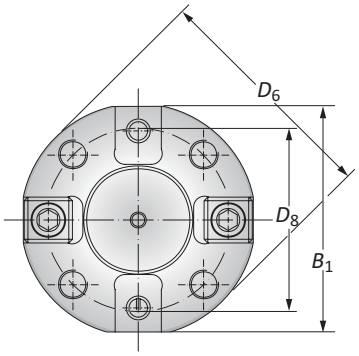

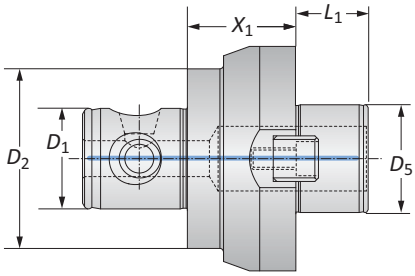

	MVS Connection D_2 | D_1	Holding Arbor Connection	Holding Arbor X_1	L_1	D_5	D_6	D_8	B_1	Weight	Part No.
	80 - 36	D 40 Alu-Line	19.00	30.00	40.00	89.00	66.70	80.00	0.50 (kg)	**309001**(1)(2)
	80 - 36	D 60	60.00	40.00	60.00	129.10	101.60	125.00	4.10 (kg)	**209060**(1)
ⓜ	100 - 56	D 40 Alu-Line	30.00	30.00	40.00	89.00	66.70	80.00	1.00 (kg)	**309041**(2)
	100 - 56	D 60	60.00	40.00	60.00	129.10	101.60	125.00	6.30 (kg)	**209043**
	100 - 56	D 60 Alu-Line	60.00	40.00	60.00	129.10	101.60	125.00	2.20 (kg)	**309043**(2)

(1) For light machining only

(2) Lightweight aluminium construction only in connection with our serrated slides

Basic D 40 Serrated Slides: Ø 200.00 - 520.00 mm (Page B10-E: 4)

Basic D 60 Serrated Slides: Ø 200.00 - 505.00 mm (Page B10-E: 5)

B10-M: 12-13

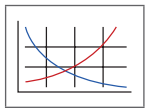

B10: VI-VII

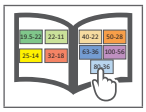

Key on B10-G: 1

ⓜ = Metric (mm)

⚠ WARNING **Exceeding weight capacity for machine tool spindle and tool changer can cause machine damage and/or serious injury. To prevent:**
-Consult machine tool builder for machine's weight limitations.
-Refer to example on page B10-M: 11 for calculating tool assembly weight
Factory technical assistance is also available for specific applications through our Application Engineering department. *email:* **engineering.eu@alliedmachine.com**

⚠ WARNING **Tool failure can cause serious injury. To prevent:**
-Do not exceed recommended 10xD length-to-diameter ratio or exceed 4 total components (including shank)
-When using Alu-Line® components, do not exceed recommended 5xD length-to-diameter ratio
-When using tool steel components, do not exceed recommended 6xD length-to-diameter ratio
-When using heavy metal components, do not exceed recommended 8xD length-to-diameter ratio
-When using a carbide shank, do not exceed recommended 9xD length-to-diameter ratio
-When using a NOVI^{TECH} module, do not exceed recommended 10xD length-to-diameter ratio
-Refer to examples on pages B10-M: 8-10 for calculating length-to-diameter ratio
Factory technical assistance is available for your specific applications through our Application Engineering department. *email:* **engineering.eu@alliedmachine.com**

Master Shanks D 40 / D 60

HSK-A (DIN 69 893) Shanks



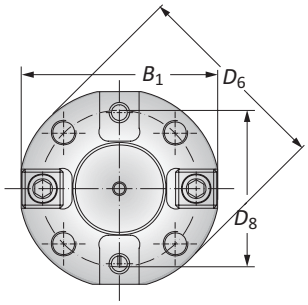

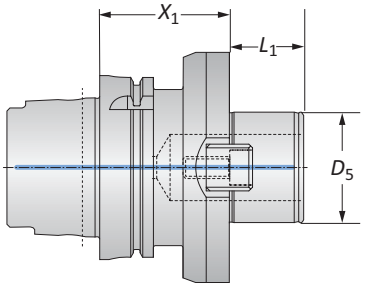

HSK-A (DIN 69 893) Shanks

	Taper Size	Connection	Shank X_1	L_1	D_5	D_6	D_8	B_1	Weight	Part No.
	63	D 40	60.00	30.00	40.00	89.00	66.70	80.00	1.90 (kg)	**358015**
m	100	D 40	60.00	30.00	40.00	89.00	66.70	80.00	3.60 (kg)	**258021**
	100	D 60	70.00	40.00	60.00	129.10	101.60	125.00	5.20 (kg)	**258061**
	100	D 60	70.00	40.00	60.00	129.10	101.60	110.00	5.00 (kg)	**258098**

B10-M: 12-13

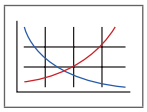

B10: VI-VII

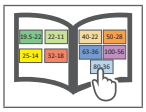

Key on B10-G: 1

m = Metric (mm)

WARNING **Exceeding weight capacity for machine tool spindle and tool changer can cause machine damage and/or serious injury. To prevent:**
-Consult machine tool builder for machine's weight limitations.
-Refer to example on page B10-M: 11 for calculating tool assembly weight
Factory technical assistance is also available for specific applications through our Application Engineering department. *email:* **engineering.eu@alliedmachine.com**

WARNING **Tool failure can cause serious injury. To prevent:**
-Do not exceed recommended 10xD length-to-diameter ratio or exceed 4 total components (including shank)
-When using Alu-Line® components, do not exceed recommended 5xD length-to-diameter ratio
-When using tool steel components, do not exceed recommended 6xD length-to-diameter ratio
-When using heavy metal components, do not exceed recommended 8xD length-to-diameter ratio
-When using a carbide shank, do not exceed recommended 9xD length-to-diameter ratio
-When using a NOVI^{TECH} module, do not exceed recommended 10xD length-to-diameter ratio
-Refer to examples on pages B10-M: 8-10 for calculating length-to-diameter ratio
Factory technical assistance is available for your specific applications through our Application Engineering department. *email:* **engineering.eu@alliedmachine.com**

Master Shanks D 40

CAT 50 Shank with Metric Threads



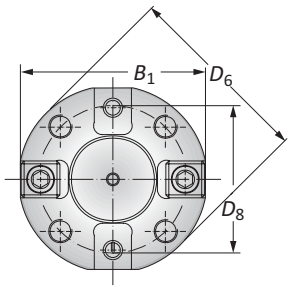

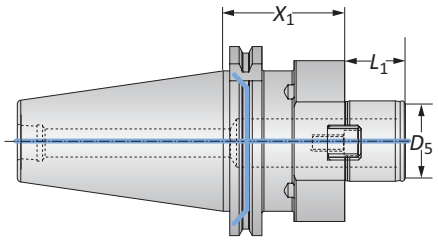

CAT 50 Shanks with Metric Threads

Taper Size	Connection	Shank X_1	Shank L_1	Shank D_5	Shank D_6	Shank D_8	Shank B_1	Weight	Part No.
50	D 40	60.00	30.00	40.00	89.00	66.70	80.00	4.60 (kg)	**326083**

B10-M: 12-13

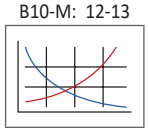

Key on B10-G: 1

B10: VI-VII

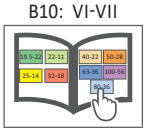

Ⓜ = Metric (mm)

⚠ WARNING **Exceeding weight capacity for machine tool spindle and tool changer can cause machine damage and/or serious injury. To prevent:**
-Consult machine tool builder for machine's weight limitations.
-Refer to example on page B10-M: 11 for calculating tool assembly weight
Factory technical assistance is also available for specific applications through our Application Engineering department. *email:* **engineering.eu@alliedmachine.com**

⚠ WARNING **Tool failure can cause serious injury. To prevent:**
-Do not exceed recommended 10xD length-to-diameter ratio or exceed 4 total components (including shank)
-When using Alu-Line® components, do not exceed recommended 5xD length-to-diameter ratio
-When using tool steel components, do not exceed recommended 6xD length-to-diameter ratio
-When using heavy metal components, do not exceed recommended 8xD length-to-diameter ratio
-When using a carbide shank, do not exceed recommended 9xD length-to-diameter ratio
-When using a NOVI^{TECH} module, do not exceed recommended 10xD length-to-diameter ratio
-Refer to examples on pages B10-M: 8-10 for calculating length-to-diameter ratio
Factory technical assistance is available for your specific applications through our Application Engineering department. *email:* **engineering.eu@alliedmachine.com**

Master Shanks D 40 / D 60

SK (DIN 69 871-AD/B) | BT / JIS B 6339 Shanks



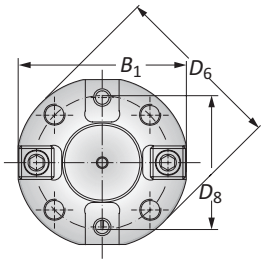

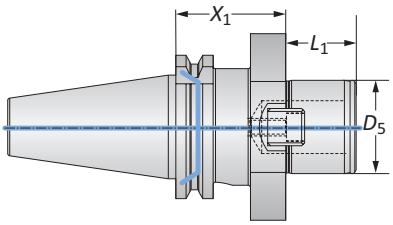

SK (DIN 69 871-AD/B) Shanks

	Taper Size	Connection	Shank X_1	L_1	D_5	D_6	D_8	B_1	Weight	Part No.
	40	D 40	50.00	30.00	40.00	89.00	66.70	80.00	1.90 (kg)	**326080***
ⓜ	50	D 40	50.00	30.00	40.00	89.00	66.70	80.00	4.10 (kg)	**326081**
	50	D 60	70.00	40.00	60.00	129.10	101.60	125.00	5.80 (kg)	**198054T019539**
	50	D 60	70.00	40.00	60.00	129.10	101.60	110.00	5.50 (kg)	**198081T019539**

*For light machining only

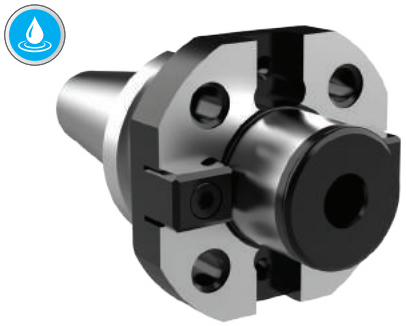

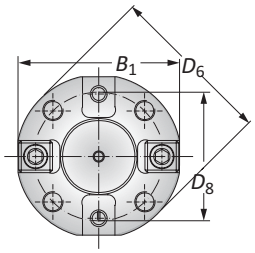

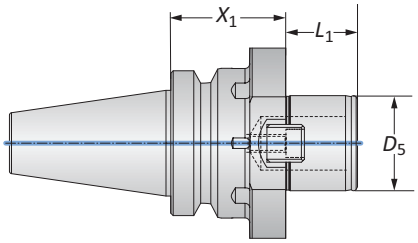

BT / JIS B 6339 Shanks

	Taper Size	Connection	Shank X_1	L_1	D_5	D_6	D_8	B_1	Weight	Part No.
	40	D 40	50.00	30.00	40.00	89.00	66.70	80.00	1.80 (kg)	**326084**
ⓜ	50	D 40	55.00	30.00	40.00	89.00	66.70	80.00	4.50 (kg)	**326082**
	50	D 60	80.00	40.00	60.00	19.10	101.60	–	8.00 (kg)	**326062**

B10-M: 12-13

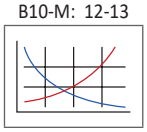

B10: VI-VII

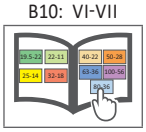

Key on B10-G: 1

ⓜ = Metric (mm)

⚠ WARNING **Exceeding weight capacity for machine tool spindle and tool changer can cause machine damage and/or serious injury. To prevent:**
-Consult machine tool builder for machine's weight limitations.
-Refer to example on page B10-M: 11 for calculating tool assembly weight
Factory technical assistance is also available for specific applications through our Application Engineering department. *email:* **engineering.eu@alliedmachine.com**

⚠ WARNING **Tool failure can cause serious injury. To prevent:**
-Do not exceed recommended 10xD length-to-diameter ratio or exceed 4 total components (including shank)
-When using Alu-Line® components, do not exceed recommended 5xD length-to-diameter ratio
-When using tool steel components, do not exceed recommended 6xD length-to-diameter ratio
-When using heavy metal components, do not exceed recommended 8xD length-to-diameter ratio
-When using a carbide shank, do not exceed recommended 9xD length-to-diameter ratio
-When using a NOVI^{TECH} module, do not exceed recommended 10xD length-to-diameter ratio
-Refer to examples on pages B10-M: 8-10 for calculating length-to-diameter ratio
Factory technical assistance is available for your specific applications through our Application Engineering department. *email:* **engineering.eu@alliedmachine.com**

Master Shanks D 60

NMTB Shanks | DIN 2080 Shanks



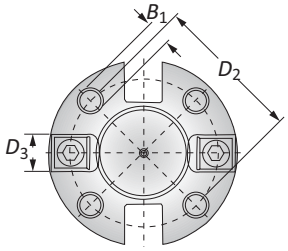

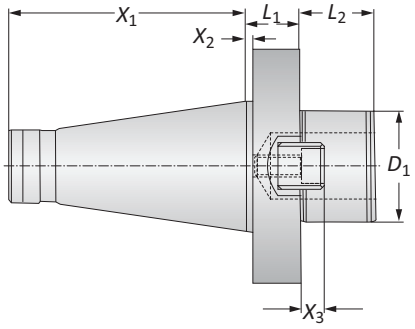

NMTB Shanks

	Taper Size	Connection	Shank X_1	X_2	L_1	L_2	D_1	X_3	D_2	D_3	B_1	Weight	Part No.
m	50	D 60	126.80	3.20	29.00	40.00	60.00	12.50	101.60	25.40	M16	8.00 (kg)	**198051T004480**



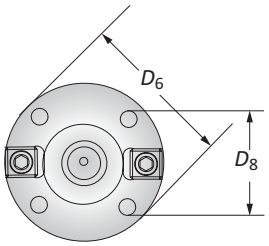

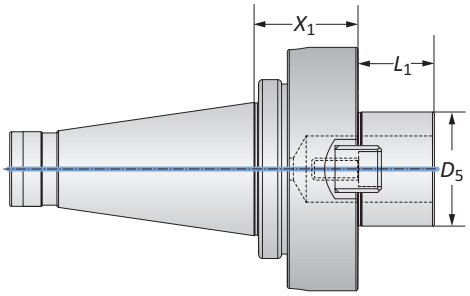

DIN 2080 Shanks

	Taper Size	Connection	Shank X_1	L_1	D_5	D_6	D_8	B_1	Weight	Part No.
m	50	D 60	55.00	40.00	60.00	128.00	101.60	–	6.80 (kg)	**326035**

B10-M: 12-13 B10: VI-VII

Key on B10-G: 1

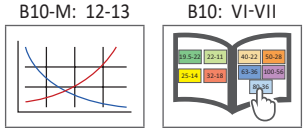

m = Metric (mm)

WARNING **Exceeding weight capacity for machine tool spindle and tool changer can cause machine damage and/or serious injury. To prevent:**
-Consult machine tool builder for machine's weight limitations.
-Refer to example on page B10-M: 11 for calculating tool assembly weight
Factory technical assistance is also available for specific applications through our Application Engineering department. *email:* **engineering.eu@alliedmachine.com**

WARNING **Tool failure can cause serious injury. To prevent:**
-Do not exceed recommended 10xD length-to-diameter ratio or exceed 4 total components (including shank)
-When using Alu-Line® components, do not exceed recommended 5xD length-to-diameter ratio
-When using tool steel components, do not exceed recommended 6xD length-to-diameter ratio
-When using heavy metal components, do not exceed recommended 8xD length-to-diameter ratio
-When using a carbide shank, do not exceed recommended 9xD length-to-diameter ratio
-When using a NOVI^{TECH} module, do not exceed recommended 10xD length-to-diameter ratio
-Refer to examples on pages B10-M: 8-10 for calculating length-to-diameter ratio
Factory technical assistance is available for your specific applications through our Application Engineering department. *email:* **engineering.eu@alliedmachine.com**

537 Accessories

Clamping Pieces | Counter Weight | Insert Holders for Abrasive Materials

537 Clamping Pieces

Slide Type	Complete Part No.	Service Key		Replacement Components 1 Cap Screw	2 Clamping Nut	3 Disk Spring
Serrated Tool Bodies	**137026**	115578	s6 / B	215101	140118	337105
Basic and Eco Slides	**137027**			215102	215105	337105
Flex Slides	**137019**			415900	215105	337105

NOTE: Clamping pieces sold separately

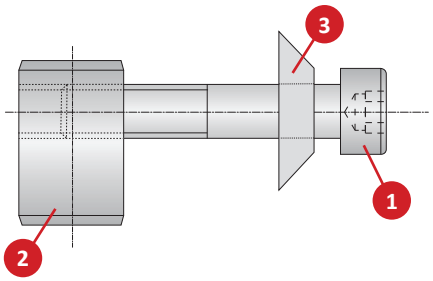

537 Counter Weight

	Boring Range	Part No.
ⓜ	100.00 - 3255.00	**537055**

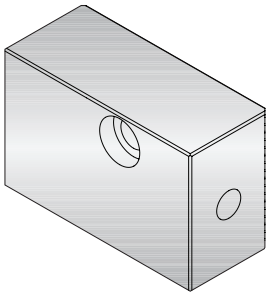

Insert Holders for Abrasive Materials

	Boring Range	L_1	Weight	Insert Form	Part No.
	100.00 - 3255.00	18.00	0.03 (kg)	20	**211061**
ⓜ	100.00 - 3255.00	18.00	0.03 (kg)	101	**211063**
	100.00 - 3255.00	18.00	0.03 (kg)	103	**211065**

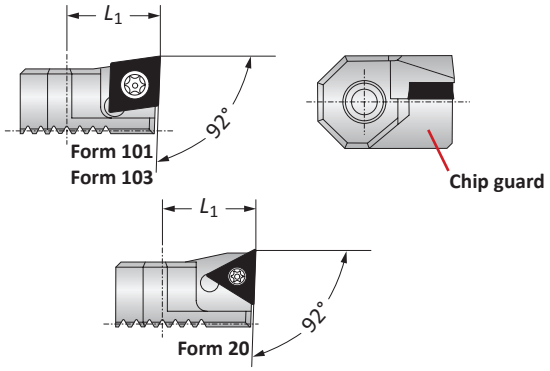

B10-M: 12-13 B10: VI-VII

Key on B10-G: 1

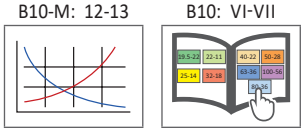

ⓜ = Metric (mm)

Inserts sold separately

⚠ WARNING **Exceeding weight capacity for machine tool spindle and tool changer can cause machine damage and/or serious injury. To prevent:**
-Consult machine tool builder for machine's weight limitations.
-Refer to example on page B10-M: 11 for calculating tool assembly weight
Factory technical assistance is also available for specific applications through our Application Engineering department. *email:* **engineering.eu@alliedmachine.com**

⚠ WARNING **Tool failure can cause serious injury. To prevent:**
-Do not exceed recommended 10xD length-to-diameter ratio or exceed 4 total components (including shank)
-When using Alu-Line® components, do not exceed recommended 5xD length-to-diameter ratio
-When using tool steel components, do not exceed recommended 6xD length-to-diameter ratio
-When using heavy metal components, do not exceed recommended 8xD length-to-diameter ratio
-When using a carbide shank, do not exceed recommended 9xD length-to-diameter ratio
-When using a NOVI^{TECH} module, do not exceed recommended 10xD length-to-diameter ratio
-Refer to examples on pages B10-M: 8-10 for calculating length-to-diameter ratio
Factory technical assistance is available for your specific applications through our Application Engineering department. *email:* **engineering.eu@alliedmachine.com**

537 Accessories | 3E[TECH+] Accessories

Accessories

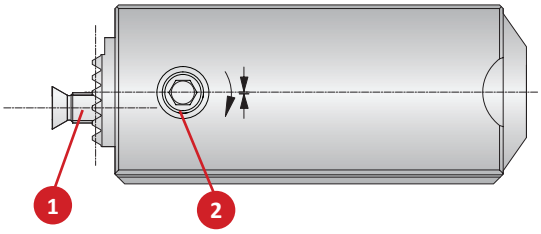

537 Analogue Cassette

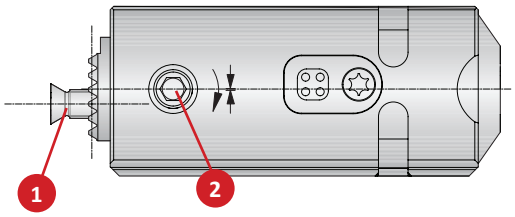

537 Digital Cassette

537 Accessories

	Cassette Part No.	1 Countersunk Screw		2 Clamping Screw	
		Part No.	Service Key	Part No.	Service Key
ⓜ	537051	215462	T20 / H	115249	s4 / F
	537052	215462	T20 / H	315789	s4 / F

3E[TECH+] Accessories

1 Charging Unit Part No.
536016

NOTE: Charging unit sold separately from 3E[TECH+]



NOTE: 3E[TECH+] adjustment accuracy of 0.001 mm on diameter

3E[TECH] Accessories

1 Sealing Ring Part No.	2 Battery CR2032 Part No.
215483	515491

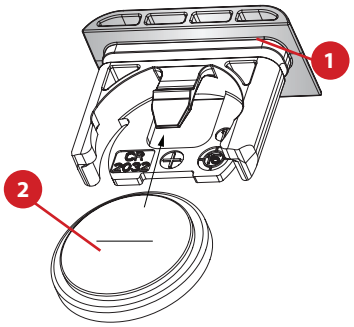

B10-M: 12-13

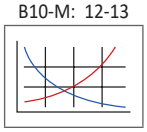

B10: VI-VII

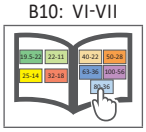

Key on B10-G: 1

ⓜ = Metric (mm)

Inserts sold separately

⚠ WARNING **Exceeding weight capacity for machine tool spindle and tool changer can cause machine damage and/or serious injury. To prevent:**
-Consult machine tool builder for machine's weight limitations.
-Refer to example on page B10-M: 11 for calculating tool assembly weight
Factory technical assistance is also available for specific applications through our Application Engineering department. *email:* **engineering.eu@alliedmachine.com**

⚠ WARNING **Tool failure can cause serious injury. To prevent:**
-Do not exceed recommended 10xD length-to-diameter ratio or exceed 4 total components (including shank)
-When using Alu-Line® components, do not exceed recommended 5xD length-to-diameter ratio
-When using tool steel components, do not exceed recommended 6xD length-to-diameter ratio
-When using heavy metal components, do not exceed recommended 8xD length-to-diameter ratio
-When using a carbide shank, do not exceed recommended 9xD length-to-diameter ratio
-When using a NOVI[TECH] module, do not exceed recommended 10xD length-to-diameter ratio
-Refer to examples on pages B10-M: 8-10 for calculating length-to-diameter ratio
Factory technical assistance is available for your specific applications through our Application Engineering department. *email:* **engineering.eu@alliedmachine.com**

Serrated Slide Basic D 40 Accessories

Clamping Pieces

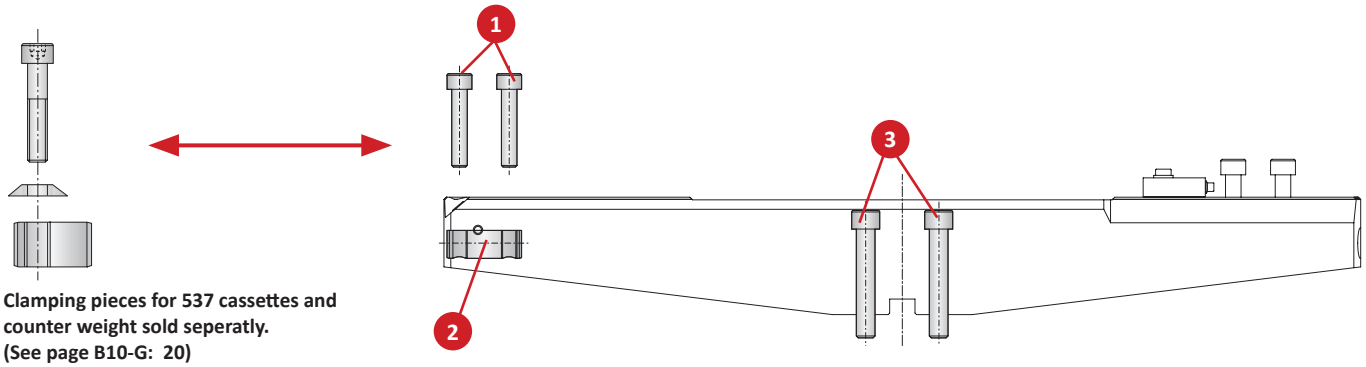

Clamping pieces for 537 cassettes and counter weight sold seperatly.
(See page B10-G: 20)

Clamping Pieces

	Connection	Serrated Slide Part No.	1 Cap Screw Part No.	1 Cap Screw Service Key	2 Clamping Nut Part No.	3 Thread Pin Part No.	3 Thread Pin Service Key	Cap Screw Part No.	Cap Screw Service Key
	D 40	349021	**115118**	s8 / B	**115669**	**349010**	s4 / F	**315186**	s10 / C
ⓜ	D 40	349022	**115118**	s8 / B	**115669**	**349011**	s4 / F	**315186**	s10 / C
	D 40	349023	**115118**	s8 / B	**115669**	**349012**	s4 / F	**315186**	s10 / C
	D 40	349024	**115118**	s8 / B	**115669**	**349013**	s4 / F	**315186**	s10 / C

B10-M: 12-13

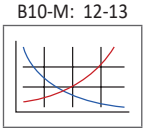

B10: VI-VII

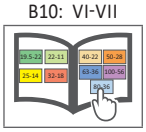

Key on B10-G: 1

ⓜ = Metric (mm)

⚠ WARNING **Exceeding weight capacity for machine tool spindle and tool changer can cause machine damage and/or serious injury. To prevent:**
-Consult machine tool builder for machine's weight limitations.
-Refer to example on page B10-M: 11 for calculating tool assembly weight
Factory technical assistance is also available for specific applications through our Application Engineering department. *email:* **engineering.eu@alliedmachine.com**

⚠ WARNING **Tool failure can cause serious injury. To prevent:**
-Do not exceed recommended 10xD length-to-diameter ratio or exceed 4 total components (including shank)
-When using Alu-Line® components, do not exceed recommended 5xD length-to-diameter ratio
-When using tool steel components, do not exceed recommended 6xD length-to-diameter ratio
-When using heavy metal components, do not exceed recommended 8xD length-to-diameter ratio
-When using a carbide shank, do not exceed recommended 9xD length-to-diameter ratio
-When using a NOVI^{TECH} module, do not exceed recommended 10xD length-to-diameter ratio
-Refer to examples on pages B10-M: 8-10 for calculating length-to-diameter ratio
Factory technical assistance is available for your specific applications through our Application Engineering department. *email:* **engineering.eu@alliedmachine.com**

Serrated Slide Basic D 60 Accessories

Clamping Pieces | Cover Plates

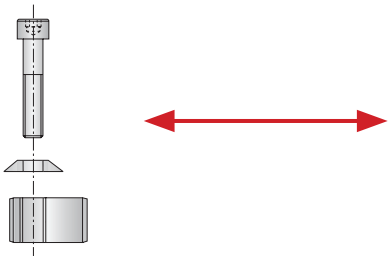

Clamping pieces for 537 cassettes and counter weight sold seperatly.
(See page B10-G: 20)

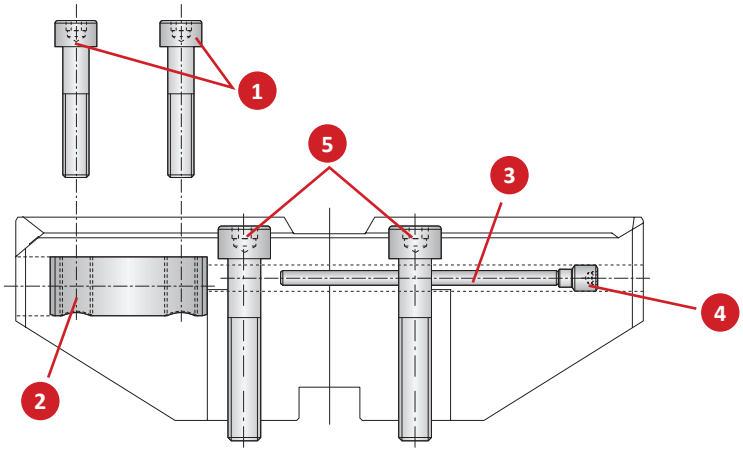

Clamping Pieces

	Connection	Serrated Slide Part No.	1 Cap Screw Part No.	1 Cap Screw Service Key	2 Clamping Nut Part No.	3 Adjustment Pin Part No.	4 Thread Pin Part No.	4 Thread Pin Service Key	5 Cap Screw Part No.	5 Cap Screw Service Key
ⓜ	D 60	349051	**115118**	s8 / B	**115669**	**114112**	**115196**	s4 / F	**115170**	s14 / C
ⓜ	D 60	349052	**115118**	s8 / B	**115669**	**114113**	**115196**	s4 / F	**115170**	s14 / C
ⓜ	D 60	349053	**115118**	s8 / B	**115669**	**114114**	**115196**	s4 / F	**115170**	s14 / C
ⓜ	D 60	349054	**115118**	s8 / B	**115669**	**114115**	**115196**	s4 / F	**115170**	s14 / C

Cover Plates for Basic D 60 Serrated Slides

	Connection	Serrated Slide Part No.	1 Cover Plate Part No.	2 Countersunk Screw Part No.	2 Countersunk Screw Service Key
ⓜ	D 60	349051	**349016**	**063106**	s4 / B
ⓜ	D 60	349052	**349017**	**063106**	s4 / B
ⓜ	D 60	349053	**349017**	**063106**	s4 / B
ⓜ	D 60	349054	**349017**	**063106**	s4 / B

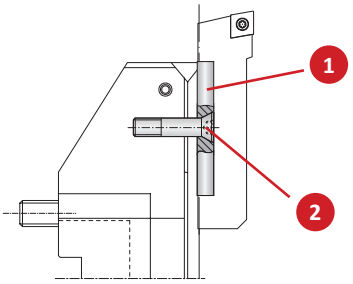

B10-M: 12-13

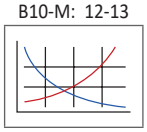

B10: VI-VII

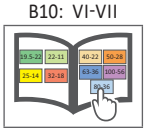

Key on B10-G: 1

ⓜ = Metric (mm)

⚠ WARNING **Exceeding weight capacity for machine tool spindle and tool changer can cause machine damage and/or serious injury. To prevent:**
-Consult machine tool builder for machine's weight limitations.
-Refer to example on page B10-M: 11 for calculating tool assembly weight
Factory technical assistance is also available for specific applications through our Application Engineering department. *email:* **engineering.eu@alliedmachine.com**

⚠ WARNING **Tool failure can cause serious injury. To prevent:**
-Do not exceed recommended 10xD length-to-diameter ratio or exceed 4 total components (including shank)
-When using Alu-Line® components, do not exceed recommended 5xD length-to-diameter ratio
-When using tool steel components, do not exceed recommended 6xD length-to-diameter ratio
-When using heavy metal components, do not exceed recommended 8xD length-to-diameter ratio
-When using a carbide shank, do not exceed recommended 9xD length-to-diameter ratio
-When using a NOVI^{TECH} module, do not exceed recommended 10xD length-to-diameter ratio
-Refer to examples on pages B10-M: 8-10 for calculating length-to-diameter ratio
Factory technical assistance is available for your specific applications through our Application Engineering department. *email:* **engineering.eu@alliedmachine.com**

Serrated Slide Eco D 60 Accessories

Clamping Pieces

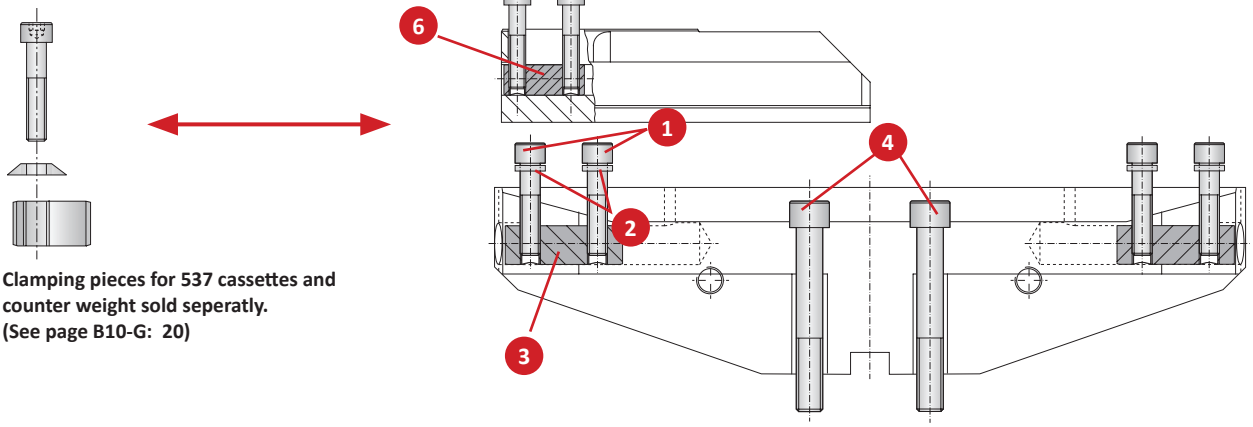

Clamping pieces for 537 cassettes and counter weight sold seperatly.
(See page B10-G: 20)

Base Slide Clamping Pieces

	Connection	Base Slide Part No.	1 Cap Screw Part No.	1 Cap Screw Service Key	2 Disc Part No.	3 Clamping Nut Part No.	4 Cap Screw Part No.	4 Cap Screw Service Key
ⓜ	D 60	349005	**115771**	s10 / C	**115737**	**415181**	**077128**	s14 / C
	D 60	349006	**115771**	s10 / C	**115737**	**415181**	**077128**	s14 / C

Serrated Slide Clamping Pieces

	Serrated Slide Part No.	5 Cap Screw Part No.	5 Cap Screw Service Key	6 Clamping Nut Part No.
ⓜ	349014	**115118**	s8 / B	**115669**
	349015	**115118**	s8 / B	**115669**

B10-M: 12-13

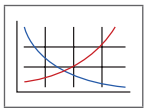

B10: VI-VII

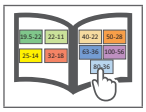

Key on B10-G: 1

ⓜ = Metric (mm)

⚠ WARNING **Exceeding weight capacity for machine tool spindle and tool changer can cause machine damage and/or serious injury. To prevent:**
-Consult machine tool builder for machine's weight limitations.
-Refer to example on page B10-M: 11 for calculating tool assembly weight
Factory technical assistance is also available for specific applications through our Application Engineering department. *email:* **engineering.eu@alliedmachine.com**

⚠ WARNING **Tool failure can cause serious injury. To prevent:**
-Do not exceed recommended 10xD length-to-diameter ratio or exceed 4 total components (including shank)
-When using Alu-Line® components, do not exceed recommended 5xD length-to-diameter ratio
-When using tool steel components, do not exceed recommended 6xD length-to-diameter ratio
-When using heavy metal components, do not exceed recommended 8xD length-to-diameter ratio
-When using a carbide shank, do not exceed recommended 9xD length-to-diameter ratio
-When using a NOVI^{TECH} module, do not exceed recommended 10xD length-to-diameter ratio
-Refer to examples on pages B10-M: 8-10 for calculating length-to-diameter ratio
Factory technical assistance is available for your specific applications through our Application Engineering department. *email:* **engineering.eu@alliedmachine.com**

Serrated Slide Flex D 60 Accessories

Clamping Pieces

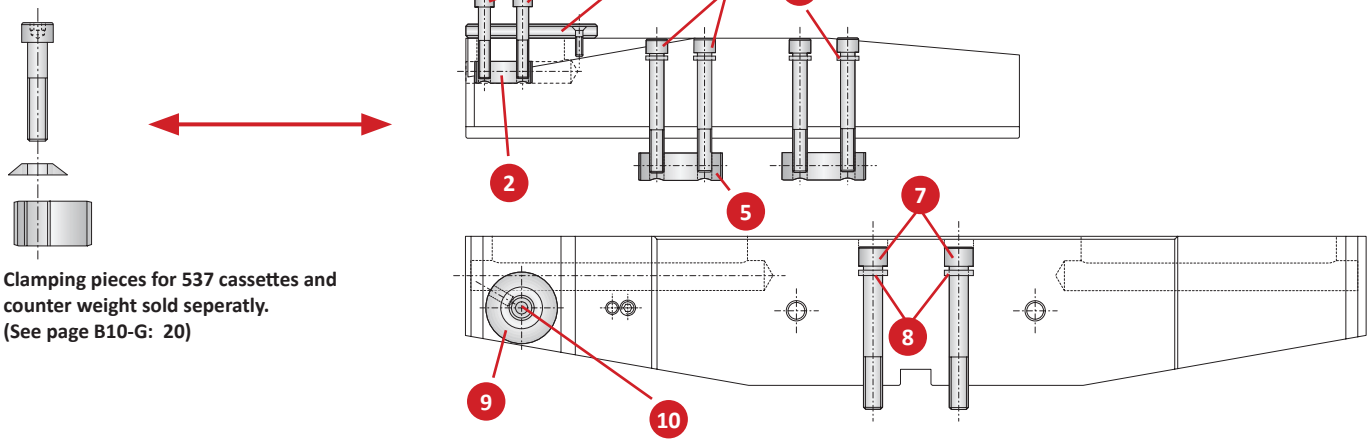

Clamping pieces for 537 cassettes and counter weight sold seperatly.
(See page B10-G: 20)

Serrated Slide Clamping Pieces

	Serrated Slide	1 Cap Screw		2 Clamping Nut	3 Adapter		4 Cap Screw		5 Clamping Nut	6 Disk
	Part No.	Part No.	Service Key	Part No.	Part No.	Service Key	Part No.	Service Key	Part No.	Part No.
ⓜ	349035	**115307**	s8 / B	**115669**	**349043**	s4 / B	**315186**	s10 / C	**349202**	**115737**
ⓜ	349036	**115307**	s8 / B	**115669**	**349043**	s4 / B	**077110**	s10 / C	**415181**	**115737**
ⓜ	349037	**115307**	s8 / B	**115669**	**349043**	s4 / B	**315403**	s10 / C	**415181**	**115737**
ⓜ	349038	**115307**	s8 / B	**115669**	**349043**	s4 / B	**315415**	s10 / C	**415181**	**115737**

Base Slide Clamping Pieces

	Base Slide	7 Cap Screw		8 Disk	9 Injector	10 Countersunk Screw	
	Connection	Part No.	Part No.	Service Key	Part No.	Part No.	Part No.	Service Key
ⓜ	D 60	349031	**115736**	s14 / C	**068168**	**349201**	**415898**	s6 / B
ⓜ	D 60	349032	**415913**	s14 / C	**068168**	**349201**	**415898**	s6 / B
ⓜ	D 60	349033	**215509**	s14 / C	**068168**	**349201**	**415898**	s6 / B
ⓜ	D 60	349034	**415636**	s14 / C	**068168**	**349201**	**415898**	s6 / B

B10-M: 12-13

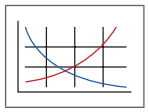

Key on B10-G: 1

B10: VI-VII

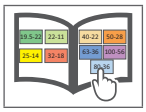

ⓜ = Metric (mm)

⚠ WARNING **Exceeding weight capacity for machine tool spindle and tool changer can cause machine damage and/or serious injury. To prevent:**
-Consult machine tool builder for machine's weight limitations.
-Refer to example on page B10-M: 11 for calculating tool assembly weight
Factory technical assistance is also available for specific applications through our Application Engineering department. *email:* **engineering.eu@alliedmachine.com**

⚠ WARNING **Tool failure can cause serious injury. To prevent:**
-Do not exceed recommended 10xD length-to-diameter ratio or exceed 4 total components (including shank)
-When using Alu-Line® components, do not exceed recommended 5xD length-to-diameter ratio
-When using tool steel components, do not exceed recommended 6xD length-to-diameter ratio
-When using heavy metal components, do not exceed recommended 8xD length-to-diameter ratio
-When using a carbide shank, do not exceed recommended 9xD length-to-diameter ratio
-When using a NOVI^{TECH} module, do not exceed recommended 10xD length-to-diameter ratio
-Refer to examples on pages B10-M: 8-10 for calculating length-to-diameter ratio
Factory technical assistance is available for your specific applications through our Application Engineering department. *email:* **engineering.eu@alliedmachine.com**

SECTION

B10-H

Inserts

Wohlhaupter® Inserts

Replaceable Boring Inserts

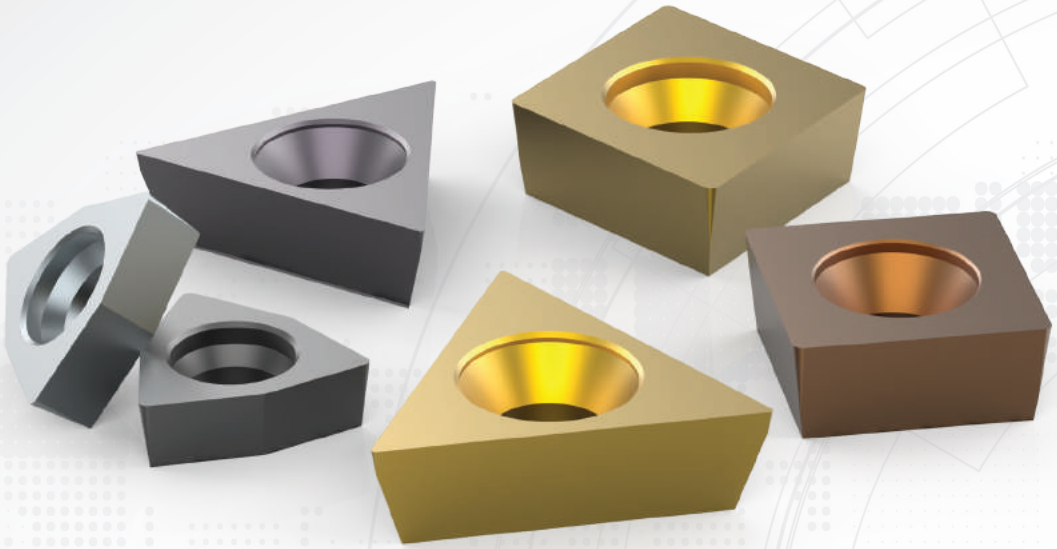

Cutting-Edge Technology

Wohlhaupter has the cutting-edge technology to achieve all of your boring applications. With precision in mind, our inserts are available in multiple insert geometries, coatings, and nose radii. Wohlhaupter inserts are offered in uncoated and coated carbide, cermet, as well as CBN and PCD materials.

Try our easy-to-use boring insert selector available online or to download from the app store to find the perfect inserts for your boring applications.
www.alliedmachine.com/bis

Applicable Industries

Aerospace | Agriculture | Automotive | Firearms | General Machining | Oil & Gas | Renewable Energy

Your safety and the safety of others is very important. This catalogue contains important safety messages. Always read and follow all safety precautions.

This triangle is a safety hazard symbol. It alerts you to potential safety hazards that can cause tool failure and serious injury.

When you see this symbol in the catalogue, look for a related safety message that may be near this triangle or referred to in the nearby text.

There are safety signal words also used in the catalogue. Safety messages follow these words.

⚠ WARNING

WARNING (shown above) means that failure to follow the precautions in this message could result in tool failure and serious injury.

NOTICE means that failure to follow the precautions in this message could result in damage to the tool or machine but not result in personal injury.

NOTE and **IMPORTANT** are also used. These are important that you read and follow but are not safety-related.

Visit www.alliedmachine.com for the most up-to-date information and procedures.

Reference Icons
The following icons will appear throughout the catalogue to help you navigate between products.

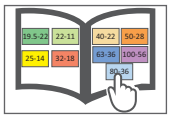

MVS Connection Colour Guide
Detailed instructions and information regarding the MVS connection(s)

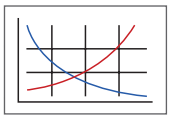

Recommended Cutting Data
Speed and feed recommendations for optimum and safe boring

Wohlhaupter® Inserts Table of Contents

Product Nomenclature

Wohlhaupter Insert Nomenclature 2
ISO Insert Nomenclature 3

Insert Grades . . . . . 4 - 9

Insert Geometries . . . . . 10 - 13

Insert Forms

Form 211 . . . . . 14 - 15
Form 20 . . . . . 16 - 17
Form 161 and 163 18
Form 47 19
Form 101, 103, 104, and 105 . . . . . 20 - 23
Form 101, 103 and 104 . . . . . 24 - 25
Form 39 . . . . . 26 - 27
Form 112, 113, and 114 28
Form 04 and 05 29
Grooving Insert Form 89, 90, and 91 . . . . . 30 - 31
Grooving Insert Form 304 . . . . . 32 - 34
Grooving Insert Form 325 35

Insert Accessories . . . . . 36 - 37

Technical Information

Surface Finish and General Formulas 38
Wiper Geometries 39
Recommended Cutting Data . . . . . 40 - 41

Wear Patterns 42

WOHLHAUPTER®

Boring Insert Selector

Find the best insert for your application.

- Generate the correct boring insert for your job in just six easy steps
- Choose type, shape, substrate, insert form, nose radius, and material
- Order easily by adding the item to your cart

www.alliedmahcine.com/bis

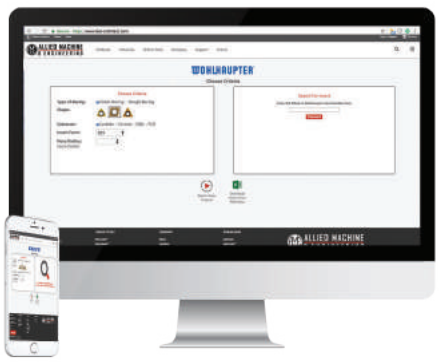

Wohlhaupter Insert Nomenclature

Reference Key

Symbol	Insert Type
▼	Roughing - Main Application
▽	Roughing - Extended Application
▼▼	Universal - Main Application
▽▽	Universal - Extended Application
▼▼▼	Finishing - Main Application
▽▽▽	Finishing - Extended Application

Reference Key

Symbol	Machining Conditions
●	Good - Main Application
○	Good - Extended Application
◕	Average - Main Application
◔	Average - Extended Application
✱	Difficult - Main Application
✲	Difficult - Extended Application

Reference Key

Symbol	Wohlhaupter Insert Grades
WHW	Uncoated carbide (HW)
WHC	Coated carbide (HC)
WHT	Uncoated cermet (HT)
WTC	Coated cermet (HC)
WCN	Ceramic cutting material (CN)
WBN	Cubic boron nitride CBN (BN)
WBC	Coated CBN (BC)
PCD	Polycrystalline diamond PCD (DP)

Wohlhaupter Inserts

F101	04	M	N	–	158	W	D
1	2	3	4		5	6	7

1. Wohlhaupter Insert Form

211	**262**
20	**264**
161	**112**
163	**113**
47	**114**
101	**04**
103	**05**
104	**89**
105	**90**
123	**91**
124	**304**
39	**325**
75	

2. Corner Radius

Metric (mm)

005 = 0.05 mm
01 = 0.10 mm
02 = 0.20 mm
03 = 0.30 mm
04 = 0.40 mm
06 = 0.60 mm
08 = 0.80 mm
12 = 1.20 mm
16 = 1.60 mm
20 = 2.00 mm
24 = 2.40 mm

3. Tolerance Group

	Metric (mm)	
G	Length of edge	±0.025
	IC	±0.025
	Thickness	±0.13
M	Length of edge	±0.08-0.15*
	IC	±0.05-0.10*
	Thickness	±0.13
F	Length of edge	±0.013
	IC	±0.005
	Thickness	±0.025
C	Length of edge	±0.13
	IC	±0.025
	Thickness	±0.025

*Varies upon insert size

4. Machining Direction

N = Neutral
L = Left
R = Right

5. Geometry

Carbide	Carbide	Tangential	Ceramic	PCD	CBN
108	**155**	**880**	**711**	**720**	**741**
109	**158**	**811**		**730**	**742**
112	**161**			**735**	**745**
114	**174W**				**747**
121	**192**				**748**
122	**199**				**749**
126	**200**				**768**
127	**650**				
128	**711**				
129	**840**				
145	**850**				
146	**860**				

6. / 7. Optional Information

W = Wiper Geometry
D = Double Tipped
T = Triple Tipped

ISO Insert Nomenclature

DIN ISO 1832

C	C	M	T	09	T3	02
1	2	3	4	5	6	7

1. Basic Insert Form

- **C** = Rhomboid 80°
- **D** = Rhomboid 55°
- **L** = Rectangular
- **R** = Round
- **S** = Square
- **T** = Triangular
- **V** = Rhomboid 35°
- **W** = Trigon

2. Clearance Angle

- **B** = 5°
- **C** = 7°
- **N** = 0°
- **P** = 11°
- **O** = 10°

3. Tolerance Group

	Metric (mm)	
G	Length of edge	±0.025
	IC	±0.025
	Thickness	±0.13
M	Length of edge	±0.08-0.15*
	IC	±0.05-0.10*
	Thickness	±0.13
F	Length of edge	±0.013
	IC	±0.005
	Thickness	±0.025
C	Length of edge	±0.13
	IC	±0.025
	Thickness	±0.025

*Varies upon insert size

4. Mounting Style

T = One-sided countersunk	Cylindrical fixing hole Countersunk 40° - 60°
H = One-sided chipbreaker	Cylindrical fixing hole Countersunk 70° - 90°
W = Without chipbreaker	Cylindrical fixing hole Countersunk 40° - 60°
X = Special design	Special insert design
A = Without chipbreaker	Cylindrical fixing hole Without countersunk

5. Insert Size / Cutting Edge

Metric (mm)	C	D	R	S	T	V	W
3.97 mm					006		03
5.00 mm					F20		
6.00 mm					F21		
6.35 mm	06				11	11	
7.94 mm				07			
9.52 mm	09	11		09	16	16	
10.00 mm		10					
12.00 mm	12	12					
12.70 mm	16	15		12			
15.87 mm			15	15			
16.00 mm			16				
19.05 mm		19		19			
20.00 mm			20				
25.00 mm			25				
25.40 mm				25			

6. Insert Thickness

Metric (mm)

- **01** = 1.59 mm
- **02** = 2.38 mm
- **T2** = 2.78 mm
- **03** = 3.18 mm
- **T3** = 3.97 mm
- **04** = 4.76 mm
- **05** = 5.56 mm
- **06** = 6.35 mm
- **07** = 7.94 mm

7. Corner Radius

Metric (mm)

- **005** = 0.05 mm
- **01** = 0.10 mm
- **02** = 0.20 mm
- **03** = 0.30 mm
- **04** = 0.40 mm
- **06** = 0.60 mm
- **08** = 0.80 mm
- **12** = 1.20 mm
- **16** = 1.60 mm
- **20** = 2.00 mm
- **24** = 2.40 mm

Wohlhaupter Insert Grades

Uncoated Carbide

Uncoated Carbide

Cutting Material	Description	Material	ISO Application 05	10	15	20	25	30	35	40
WHW01 (HW)	• Fine-grain carbide • Finishing & light roughing • Non-ferrous metals, cast materials & difficult-to-machine alloys	P								
		M								
		K	■	■	■					
		N	■	■	■					
		S	■	■						
		H								
WHW16 (HW)	• Fine-grain carbide • Finishing & light roughing • Non-ferrous metals, cast materials & difficult-to-machine alloys	P								
		M								
		K		■	■					
		N		■	■					
		S		■	■					
		H								
WHW20 (HW)	• Tough fine-grain carbide • Finishing, roughing & grooving • Steel & cast materials, cast steel • Non-ferrous materials & difficult-to-machine alloys	P			■	■				
		M								
		K			■	■				
		N			■	■				
		S			■	■				
		H								

Wohlhaupter Insert Grades

Coated Carbide

Coated Carbide

Cutting Material	Description	Material	ISO Application 05	10	15	20	25	30	35	40
WHC05 (HC)	• PVD coating with nano-composite structure • Finishing & roughing • Steels, stainless steels, cast materials, & difficult-to-machine alloys	P		■	■					
		M		■	■					
		K		■	■					
		N								
		S		■	■					
		H								
WHC18 (HC)	• PVD-TiB2 coating • Finishing & light roughing • Non-ferrous metals	P								
		M								
		K								
		N		■	■	■				
		S								
		H								
WHC19 (HC)	• Multilayer PVD coating • Finishing & roughing • Stainless steels	P				■	■	■	■	
		M				■	■	■		
		K					■	■	■	
		N								
		S				■	■	■		
		H								
WHC20 (HC)	• Multilayer CVD coating • Finishing • Steels & stainless steels	P		■	■	■				
		M		■	■					
		K								
		N								
		S								
		H								
WHC30 (HC)	• CVD coating • Roughing • Steel & cast steel	P					■	■		
		M				■	■			
		K					■	■		
		N								
		S								
		H								
WHC79 (HC)	• Multilayer MT CVD coating • Roughing & finishing • Steels, stainless steels & cast materials	P				■	■	■		
		M			■	■	■			
		K			■	■	■			
		N								
		S								
		H								
WHC81 (HC)	• Thick MT CVD coating with adominal AL203 • High cutting speeds possible • Excellent choice for cast materials	P		■	■					
		M								
		K		■	■	■				
		N								
		S								
		H								
WHC88 (HC)	• Multilayer PVD coating • Finishing & roughing • Universal usage	P					■	■	■	
		M					■	■		
		K								
		N								
		S				■	■	■		
		H								

Wohlhaupter Insert Grades

Coated Carbide

Coated Carbide

Cutting Material	Description	Material	ISO Application 05	10	15	20	25	30	35	40
WHC98 (HC)	• PVD TiAlN coating • Roughing & finishing • Steels, stainless steels & difficult-to-machine materials	P				■	■	■		
		M				■	■	■		
		K				■	■	■		
		N								
		S				■	■			
		H								
WHC111 (HC)	• PVD TiAlN coating • Finishing • Machining of steels after heat treating with high Cr content up to 60 HRC • Hard - soft transitions, difficult-to-machine alloys & stainless steels	P	■	■						
		M	■	■						
		K	■	■	■					
		N								
		S	■	■						
		H	■	■						
WHC114 (HC)	• Multilayer PVD coating • Finishing & roughing • Steels, stainless steels, & difficult-to-machine materials	P			■	■	■			
		M			■	■	■			
		K			■	■	■			
		N								
		S			■	■	■			
		H								
WHC136 (HC)	• Stronger PVD coating with improved coating adhesion • High oxidation resistance allows a wide range of applications	P			■	■	■			
		M			■	■	■			
		K				■	■			
		N								
		S			■	■	■			
		H								
WHC164 (HC)	• Thick MT-CVD coating with a dominant AC_2O_3 • Primarily developed for the material groups P-K & alternatively H • Full & discontinuous cut • High cutting speeds possible	P				■	■	■		
		M								
		K				■	■	■		
		N								
		S								
		H		■	■					
WHC168 (HC)	• Multilayer MT CVD coating • Excellent combination of toughness & reliability • Steels, cast materials & alternatively for stainless steel	P				■	■	■		
		M				■	■			
		K				■	■	■		
		N								
		S								
		H								
WHC170 (HC)	• Multilayer MT CVD coating • Excellent toughness • First choice for strong interruptions • Cast materials and steel	P						■	■	■
		M					■	■	■	
		K						■	■	■
		N								
		S								
		H								
WHC198 (HC)	• Upgraded PVD grade with hard AlTiN coating • Optimized cutting edge stability • General machining of steel, stainless steel, high-temperature resistant alloys, titanium, iron, cast iron, & non-ferrous materials	P				■	■	■		
		M				■	■			
		K				■	■	■		
		N				■	■	■	■	
		S				■	■			
		H								
WHC190 (HC)	• Newest generation multilayer PVD coating • Finishing & roughing • Extremely universal & the first choice for poor machining conditions • Excellent in cast steels, stainless steels, & super alloys	P				■	■	■	■	
		M				■	■	■		
		K					■	■	■	
		N								
		S				■	■	■		
		H								

Wohlhaupter Insert Grades

Uncoated Cermet | Coated Cermet

Uncoated Cermet

Cutting Material	Description	Material	ISO Application 05	10	15	20	25	30	35	40
WHT10 (HT)	• Uncoated cermet • Finishing • Steels, stainless steels & cast materials	P								
		M								
		K								
		N								
		S								
		H								
WHT12 (HC)	• Uncoated cermet • Finishing • Steels, cast materials, sintered metals, & non-ferrous metals	P								
		M								
		K								
		N								
		S								
		H								
WHT32 (HC)	• Uncoated cermet • Finishing • Steels & cast materials	P								
		M								
		K								
		N								
		S								
		H								

Coated Cermet

Cutting Material	Description	Material	ISO Application 05	10	15	20	25	30	35	40
WTC15 (TC)	• New PVD brilliant coating • Reduce friction coefficient in turning applications • Coated cermet general purpose grade for material group • Achieves excellent surface finish with excellent wear resistance • Usable in stainless steels	P								
		M								
		K								
		N								
		S								
		H								
WTC121 (TC)	• PVD coated cermet • Finishing of steels & stainless steels	P								
		M								
		K								
		N								
		S								
		H								

Wohlhaupter Insert Grades

Uncoated Cubic Boron Nitride | Coated Cubic Boron Nitride

Uncoated Cubic Boron Nitride

Cutting Material	Description	Material	ISO Application 05	10	15	20	25	30	35	40
WBN150 (BN)	• Uncoated CBN grade • Roughing & finishing smooth & slightly discontinuous cuts • Hardened steels 52 - 64 HRC • Grain size 2 µm • CBN content: 50%	P								
		M								
		K								
		N								
		S								
		H								
WBN200 (BN)	• Uncoated CBN grade • Roughing & finishing highly discontinuous cuts • Hardened steels 52 - 64 HRC • Grain size 3 µm • CBN content: 65%	P								
		M								
		K								
		N								
		S								
		H								
WBN300 (BN)	• Uncoated CBN grade • Roughing & finishing smooth cuts • Hardened steels 52 - 64 HRC • Grain size 0.5 - 1.0 µm • CBN content: approximately 50%	P								
		M								
		K								
		N								
		S								
		H								
WBN450 (BN)	• Uncoated CBN grade • Roughing & finishing smooth & discontinuous cuts • Pearlite grey cast iron & sintered metals • Grain size 2 µm • CBN content: 90%	P								
		M								
		K								
		N								
		S								
		H								
WBN448 (BN)	• Uncoated CBN grade • Roughing & finishing smooth & discontinuous cuts • Pearlite grey cast iron & sintered metals and ductile iron • CBN content: 90%	P								
		M								
		K								
		N								
		S								
		H								

Coated Cubic Boron Nitride

Cutting Material	Description	Material	ISO Application 05	10	15	20	25	30	35	40
WBC300 (BC)	• Coated CBN • Roughing and finishing smooth cuts • Hardened steels 52 - 64 HRC • Grain size 1 µm • CBN content: 50%	P								
		M								
		K								
		N								
		S								
		H								

Wohlhaupter Insert Grades

Polycrystalline Diamond | Ceramic Cutting Material

Polycrystalline Diamond

Cutting Material	Description	Material	ISO Application 05	10	15	20	25	30	35	40
PCD D30 (DP)	• PCD medium grain grade • Finishing • Al alloys & Mg alloys up to 12% Si • Grain size 10 µm	P								
		M								
		K								
		N								
		S								
		H								
PCD D50 (DP)	• PCD mixed-grain grade • Finishing • CFRP, GRP, MMC, Al alloys over 12% Si • Grain size 2 - 30 µm	P								
		M								
		K								
		N								
		S								
		H								

Ceramic Cutting Material

Cutting Material	Description	Material	ISO Application 05	10	15	20	25	30	35	40
WCN06 (CN)	• Uncoated silicon-nitride ceramic • Roughing • Pearlite grey cast iron	P								
		M								
		K								
		N								
		S								
		H								

Wohlhaupter Insert Geometries

Cermet | Carbide

Cermet | Carbide

Geometry	Description	Application	Available Form
108 	• Sintered chip breaker for higher feeds • Suitable for highly discontinuous cuts	▼▼▼ ▼	F101, F103, F104, F112, F113
109 	• Sintered geometry with V-shaped chip breaker for roughing & finishing • Good chip control even for shallow depth of cut	▼▼▼ ▼	F101, F103, F104
112 	• Sintered chip breaker • Finishing & light roughing	▼▼▼ ▽	F101, F103
121 	• Positive geometry with stable cutting edge • Finishing in different material groups • Good chip control	▼▼▼	F20, F211
122 	• Sintered chip breaker • Good chip control - even with long-chipping materials	▼▼▼	F101, F103, F161
126 	• Sintered version with a wide range of applications	▼	F105
127 	• Highly positive sintered geometry • For non-ferrous metals & cast iron	▼▼▼ ▼	F37, F39, F101, F103, F104, F112, F113
128 	• Highly positive sintered geometry • Polished for finishing non-ferrous metals, cast iron, & steel	▼▼▼	F20
129 	• Highly positive chip breaking geometry • Polished for non-ferrous metals, cast iron, & steel • Ideal for structural steel applications	▼▼▼ ▼	F37, F39, F101, F103
145 	• Geometry for finishing in smooth & discontinuous cut • Good chip control - even with long-chipping materials	▼▼▼ ▼	F101, F103, F112, F113, F161
146 	• Positive geometry with stable cutting edge • Universal usage for roughing, finishing and chamfering	▼▼▼ ▼	F037, F039, F101, F103, F104, F112, F113,

Wohlhaupter Insert Geometries

Cermet | Carbide

Cermet | Carbide

Geometry		Description	Application	Available Form
155		• Positive sintered geometry • Special cutting edge design in combination with the chip breaker design enables exceptional chip control even at shallow cutting depths & light feeds	▼▼▼	F20, F101, F103, F39
158		• Stable sintered geometry for roughing & finishing with & without discontinuous cuts	▼▼▼ ▼	F101, F103, F104, F105, F113, F114, F163
174W		• Wiper geometry for highly productive turning & boring • Can be used with pitch angle 92° - 95° • Good chip breaking properties even at lower feed rates	▼▼▼ ▽	F101, F103
192		• Sintered version for a variety of applications • Low cutting pressure because of sharp cutting edge prep	▼▼▼ ▼	F39, F101, F103, F104, F112, F113, F163, F161, F262, F264
199		• Positive sintered geometry for wide variety of applications • Special chip breaker allows chip control with different radial depth of cut	▼▼▼ ▼	F101, F103, F104, F112, F113
200		• Highly positive sintered geometry • Applicable for various material groups for low cutting pressure	▼▼▼ ▼	F39, F101, F103, F104, F264
650		• Obliquely ground chip breaker reduces cutting forces • Finishing & smooth interrupted cuts	▼▼▼	F20, F211
711		• Negative geometry with 0 rake suitable for fine finishing and semi roughing • Machined materials in groups K & H • Continuous and moderately interrupted cut	▼▼▼ ▼	F101, F103, F104, F113, F163
840		• Parallel ground chip breaker • For finish operations with stable cutting edge	▼▼▼	F20
850		• Parallel ground chip breaker • Good chip control with short to medium feeds	▼▼▼	F161
860		• Parallel ground chip breaker reduces cutting forces • Stable for a wide range of applications	▼▼▼ ▼	F101, F103, F104, F105, F325

Wohlhaupter Insert Geometries

Tangential | Ceramic

Tangential

Geometry	Description	Application	Available Form
880 	• Large parallel ground chip breaker with 10° rake angle for reduced cutting force	▼	F04, F05
811 	• Smooth geometry without additional ground chip breaker • Reinforced cutting edges provide stability • Excellent for cast materials	▼	F05

Ceramic

Geometry	Description	Application	Available Form
711 	• Smooth geometry with 0° rake angle • High cutting edge stability particularly in discontinuous cuts	▼	F75, F103, F104, F123

Wohlhaupter Insert Geometries

PCD | CBN

PCD

Geometry	Description	Application	Available Form
720 	• Smooth geometry in positive version with 7° rake angle for PCD • Sharp cutting edge	▼▼▼	F20, F101, F103
730 	• Smooth geometry with 0° rake angle for PCD • Sharp cutting edge	▼▼▼	F20, F39, F75, F101, F103, F123, F211, F262, F264
735 	• Smooth geometry • Laser-cut chip breaker for PCD • Suitable for long-chipping aluminium wrought alloys	▼▼▼	F20, F39, F101, F103, F211, F262, F264

CBN

Geometry	Description	R	Fb	Fw	Application	Available Form
741 	• Smooth geometry with 0° rake angle for CBN • Rounded cutting edge with 30° chamfer	0.015	0.15	30°	▼▼▼	F20, F101, F103
742 	• Smooth geometry with 0° rake angle for CBN • Rounded cutting edge with 15° chamfer	0.015	0.1	15°	▼▼▼	F20, F101, F103
745 	• Smooth geometry with 0° rake angle for CBN • Rounded cutting edge with 30° chamfer	0.015	0.05	30°	▼▼▼	F20, F211
747 	• Smooth geometry with 0° rake angle for CBN • Rounded cutting edge with a small 20° chamfer	0.015	0.1	20°	▼▼▼	F39, F104, F262, F264
748 	• Smooth geometry with 0° rake angle for CBN • Rounded cutting edge • No chamfer	0.015	0.2	20°	▼▼▼	F20, F101, F103, F211
749 	• Smooth geometry with 0° rake angle for CBN • Rounded cutting edge with a large 20° chamfer	0.015	0.2	20°	▼▼▼ ▼	F75, F123, F264
768 	• Smooth geometry with 7° rake angle for CBN • Rounded cutting edge	0.015	–	–	▼▼▼	F20, F101, F103

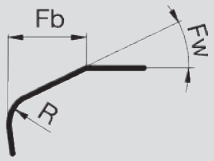

Insert Form 211

Cermet | Carbide



121 Geometry

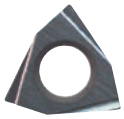

650 Geometry

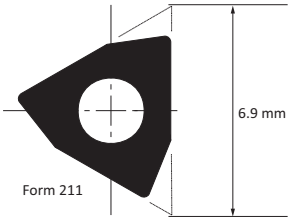

		Cermet					Carbide											
		Uncoated			Coated		Uncoated		Coated									
Steel	P	▼▼▼							▼▼▼		▼▼▼			▼▼▼		▼▼▼		
Stainless Steel	M								▽▽▽		▼▼▼			▼▼▼		▼▼▼		
Cast Iron	K	▽▽▽					▽▽▽		▼▼▼		▽▽▽			▼▼▼		▽▽▽		
Non-Ferrous Materials	N	▽▽▽					▼▼▼			▼▼▼								
Titanium	S						▽▽▽				▼▼▼			▼▼▼		▼▼▼		
Hard Materials	H													▼▼▼				

Geometry	Radius mm	Radius in	Description	ISO Code	Part No.	WHT10	WHT12	WHT32	WTC15	WTC121	WHW01	WHW16	WHC05	WHC18	WHC19	WHC79	WHC98	WHC111	WHC114	WHC136	WHC164
121	0.10	0.004	F21101GN121	WBGX030101	**397675**										✱			◔			
121	0.20	0.008	F21102GN121	WBGX030102	**397676**										✱			◔			
650	0.10	0.004	F21101GL650	WBGX030101	**097755**		●				●		●	●						◔	
650	0.20	0.008	F21102GL650	WBGX030102	**097454**		●				●		●							◔	

Reference Key

Symbol	Machining Conditions
●	Good - Main Application
◔	Average - Main Application
✱	Difficult - Main Application

Reference Key

Symbol	Insert Type
▼▼▼	Finishing - Main Application
▽▽▽	Finishing - Extended Application

Insert Form	Countersunk Screw		Torque Driver	Service Key	Technical Data: Torque	Technical Data: Key Size
211	**215377**	M2 x 0.4 x 4	**415507**	**115537**	0.6 Nm	T6

Insert Form 211

CBN | PCD



730 Geometry | 735 Geometry | 748 Geometry

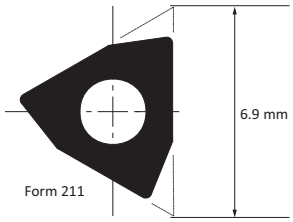

		Ceramic					CBN								PCD			
		Uncoated			Coated		Uncoated						Coated					
Steel	P																	
Stainless Steel	M																	
Cast Iron	K									▼▼▼								
Non-Ferrous Materials	N														▼▼▼	▼▼▼		
Titanium	S																	
Hard Materials	H							▼▼▼										
Geometry	Radius mm	Radius in	Description	ISO Code	Part No.			WBN150	WBN200	WBN300	WBN450				PKDD30	PKDD50		
730	0.10	0.004	F21101GN730	WBGX030101	397763										●			
730	0.20	0.008	F21102GN730	WBGX030102	097557										●	●		
735	0.20	0.008	F21102GN735	WBGX030102	397237										●			
748	0.10	0.004	F21101GN748	WBGX030101	097486				●		●					●		
748	0.20	0.008	F21102GN748	WBGX030102	097552				●		●							

Insert Form	Countersunk Screw		Torque Driver	Service Key	Technical Data: Torque	Technical Data: Key Size
211	215377	M2 x 0.4 x 4	415507	115537	0.6 Nm	T6

Reference Key

Symbol	Machining Conditions
●	Average - Main Application

Reference Key

Symbol	Insert Type
▼▼▼	Finishing - Main Application

Insert Form 20

Cermet | Carbide



121/121W Geometry



128 Geometry



155 Geometry



650 Geometry



840 Geometry

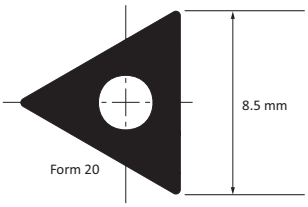

		Cermet					Carbide											
		Uncoated			Coated		Uncoated		Coated									
Steel	P		▼▼▼		▼▼▼	▼▼▼			▼▼▼		▼▼▼			▼▼▼		▼▼▼		▼▼▼
Stainless Steel	M				▽▽▽	▽▽▽			▽▽▽		▼▼▼			▼▼▼		▼▼▼		▼▼▼
Cast Iron	K		▽▽▽		▽▽▽		▽▽▽	▽▽▽	▼▼▼		▽▽▽			▼▼▼		▽▽▽		▽▽▽
Non-Ferrous Materials	N		▽▽▽				▼▼▼	▼▼▼		▼▼▼								
Titanium	S						▽▽▽	▽▽▽			▼▼▼					▼▼▼		▼▼▼
Hard Materials	H															▼▼▼		

Geometry	Radius mm	Radius in	Description	ISO Code	Part No.	WHT10	WHT12	WHT32	WTC15	WTC121	WHW01	WHW16	WHC05	WHC18	WHC19	WHC79	WHC98	WHC111	WHC114	WHC136
121	0.10	0.004	F02001GN121	TOGX080201	**397672**										✱			◕		
121	0.20	0.008	F02002GN121	TOGX080202	**397673**										✱			◕		
121	0.40	0.016	F02004GN121	TOGX080204	**397674**										✱			◕		
121W	0.20	0.008	F02002GX121W	TOGX080202	**397916**													◕		
121W	0.40	0.016	F02004GX121W	TOGX080204	**397917**													◕		
128	0.10	0.004	F02001GN128	TOGX080201	**291473**							●	●							
128	0.20	0.008	F02002GN128	TOGX080202	**297541**							●	●	●						
128	0.40	0.016	F02004GN128	TOGX080204	**297542**							●	●	●						
155	0.20	0.008	F02002MN155	TOMX080202	**397688**				◕											
155	0.40	0.016	F02004MN155	TOMX080204	**397689**				◕											
650	0.10	0.004	F02001GL650	TOGX080201	**097153**		●			◕	●		●							◕
650	0.20	0.008	F02002GL650	TOGX080202	**097546**		●			◕	●		●							◕
650	0.30	0.012	F02003GL650	TOGX080203	**097154**						●		●							◕
650	0.40	0.016	F02004GL650	TOGX080204	**097599**		●			◕	●		●							◕
650	0.80	0.031	F02008GL650	TOGX080208	**397764**						●									◕
840	0.20	0.008	F02002GR840	TOGX080202	**097701**		●						●							

Reference Key

Symbol	Machining Conditions
●	Good - Main Application
◕	Average - Main Application
✱	Difficult - Main Application

Reference Key

Symbol	Insert Type
▼▼▼	Finishing - Main Application
▽▽▽	Finishing - Extended Application

Insert Form	Countersunk Screw		Torque Driver	Service Key	Technical Data: Torque	Technical Data: Key Size
20	**115535**	M2 x 0.4 x 5	**415508**	**115591**	0.9 Nm	T7

Insert Form 20

CBN | PCD


720 Geometry


730 Geometry


735 Geometry


741 Geometry


742 Geometry


742T Geometry


745 Geometry


748 Geometry


768 Geometry

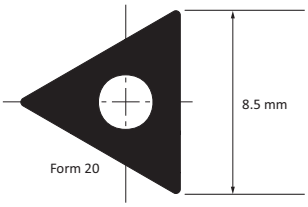

		CBN								PCD			
		Uncoated						Coated					
Steel	P												
Stainless Steel	M												
Cast Iron	K			▼▼▼	▼▼▼	▼▼▼							
Non-Ferrous Materials	N									▼▼▼	▼▼▼		
Titanium	S												
Hard Materials	H		▼▼▼	▼▼▼				▼▼▼					

Geometry	Radius mm	Radius in	Description	ISO Code	Part No.	WBN150	WBN200	WBN300	WBN450	WBN448		WBC300		PKDD30	PKDD50		
720	0.20	0.008	F02002GN720	TOGX080202	297692									◕			
720	0.40	0.016	F02004GN720	TOGX080204	297845									◕			
730	0.20	0.008	F02002GN730	TOGX080202	097487									◕	◕		
730	0.40	0.016	F02004GN730	TOGX080204	097686									◕	◕		
730	0.80	0.031	F02008GN730	TOGX080208	097877									◕			
735	0.20	0.008	F02002GN735	TOGX080202	397133									◕			
735	0.40	0.016	F02004GN735	TOGX080204	397301									◕			
741	0.20	0.008	F02002GN741	TOGX080202	297260		◕										
741	0.40	0.016	F02004GN741	TOGX080204	297262		◕										
742	0.20	0.008	F02002GN742	TOGX080202	297264			●									
742	0.40	0.016	F02004GN742	TOGX080204	397610			●									
742T	0.20	0.008	F02002GN742T	TOGX080202	397961					◕		●					
742T	0.40	0.016	F02004GN742T	TOGX080204	397551					◕		●					
745	0.10	0.004	F02001GN745	TOGX080201	297259		◕										
748	0.20	0.008	F02002GN748	TOGX080202	297780				◕								
748	0.40	0.016	F02004GN748	TOGX080204	297782				◕								
768	0.20	0.008	F02002GN768	TOGX080202	397146				◕								
768	0.40	0.016	F02004GN768	TOGX080204	397192				◕								

Insert Form	Countersunk Screw		Torque Driver	Service Key	Technical Data: Torque	Technical Data: Key Size
20	115535	M2 x 0.4 x 5	415508	115591	0.9 Nm	T7

Reference Key

Symbol	Machining Conditions
●	Good - Main Application
◕	Average - Main Application

Reference Key

Symbol	Insert Type
▼▼▼	Finishing - Main Application

Insert Forms 161, 163

Cermet | Carbide


122 Geometry


129 Geometry


145 Geometry


146 Geometry


158 Geometry


192 Geometry


711 Geometry


850 Geometry

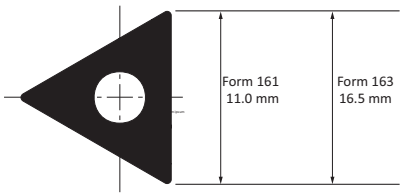

		Cermet					Carbide											
		Uncoated			Coated		Uncoated		Coated									
Steel	P	▼▼▼	▼▼▼						▼▼▼	▼▼▼	▼▼▼	▼▼▼	▼▼▼	▼▼▼			▼▼▼	
Stainless Steel	M								▽▽▽		▼▼▼	▼▼▼	▽▽▽	▼▼▼				
Cast Iron	K	▽▽▽	▽▽▽					▽▽▽	▼▼▼	▼▼▼		▽▽▽	▼▼▼	▼▼▼			▼▼▼	
Non-Ferrous Materials	N	▽▽▽	▽▽▽					▼▼▼										
Titanium	S							▽▽▽			▼▼▼	▼▼▼		▼▼▼				
Hard Materials	H									▽▽▽				▼▼▼			▽▽▽	

Geometry	Radius mm	Radius in	Description	ISO Code	Part No.	WHT10	WHT12	WHT32	WTC15	WTC121	WHW01	WHW16	WHC05	WHC81	WHC88	WHC190	WHC79	WHC111	WHC114	WHC136	WHC164
122	0.40	0.016	F16104MN122	TCMT110204	**097953**	●															
129	0.20	0.008	F16102GN129	TCGT110202	**397769**							●	●								
129	0.40	0.016	F16104GN129	TCGT110204	**397770**							●	●								
129	0.40	0.016	F16304GN129	TCGT16T304	**397771**							●	●								
145	0.40	0.016	F16104GN145	TCGT110204	**297993**													●			
146	0.40	0.016	F16104MN146	TCMT110204	**397977**									●	✱						
146	0.80	0.031	F16108MN146	TCMT110208	**397026**									●	✱						
146	0.40	0.016	F16304MN146	TCMT16T304	**397990**									●	✱						
146	0.80	0.031	F16308MN146	TCMT16T308	**397974**									●	✱						
158	0.40	0.016	F16304MN158	TCMT16T304	**297604**												◕				
192	0.40	0.016	F16104MN192	TCMT110204	**397663**											✱					◕
192	0.40	0.016	F16304MN192	TCMT16T304	**397654**											✱					◕
192	0.80	0.031	F16308MN192	TCMT16T308	**397772**											✱					
711	0.40	0.016	F16304MN711	TCMT16T304	**397898**									●							
711	0.80	0.031	F16304MN711	TCMT16T308	**397899**									●							
850	0.20	0.008	F16102GL850	TCGT110202	**097512**		●														

Reference Key

Symbol	Machining Conditions
●	Good - Main Application
◕	Average - Main Application
✱	Difficult - Main Application

Insert Form	Countersunk Screw		Torque Driver	Service Key	Technical Data: Torque	Technical Data: Key Size
161	**115676**	M2.5 x 0.45 x 5	**415514**	**115590**	1.2 Nm	T8
163	**115673**	M3.5 x 0.6 x 9	**415510**	**115664**	3.0 Nm	T15

Reference Key

Symbol	Insert Type
▼▼▼	Finishing - Main Application
▽▽▽	Finishing - Extended Application

Insert Form 47

Cermet | Carbide



650 Geometry

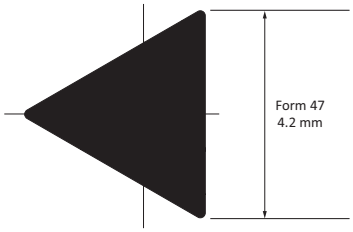

		Carbide									
		Uncoated		Coated							
Steel	P					▼▼▼					
Stainless Steel	M					▽▽▽					
Cast Iron	K	▽▽▽				▽▽▽					
Non-Ferrous Materials	N	▼▼▼									
Titanium	S	▽▽▽									
Hard Materials	H										

Geometry	Radius mm	Radius in	Description	ISO Code	Part No.	WHW01	WHW16	WHC05	WHC18	WHC20	WHC79	WHC111	WHC114	WHC136	WHC164
650	0.10	0.004	F04701FL650	TOFX040101	**097832**	●				●					
650	0.20	0.008	F04702FL650	TOFX040102	**097833**	●				●					

Reference Key

Symbol	Machining Conditions
●	Good - Main Application

Reference Key

Symbol	Insert Type
▼▼▼	Finishing - Main Application
▽▽▽	Finishing - Extended Application

Insert Form	Countersunk Screw		Clamping Jaw	Torque Driver	Service Key	Technical Data: Torque	Technical Data: Key Size
47	**315324**	M1.8 x 0.35 x 4	**315323**	–	**115537**	0.5 Nm	T6

Insert Forms 101, 103, 104, 105

Cermet | Carbide

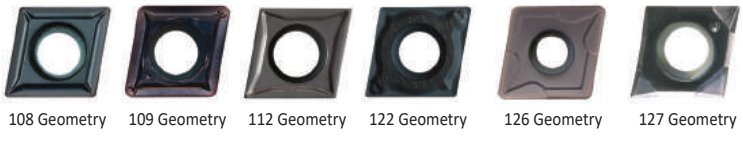

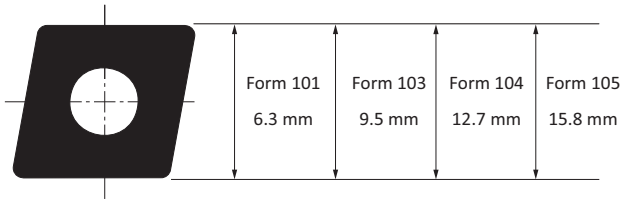

		Cermet						Carbide										
		Uncoated				Coated		Uncoated	Coated									
Steel	P	▼▼▼			▼▼▼ ▽									▼▼▼ ▼			▼▼▼ ▼	
Stainless Steel	M													▼▼▼ ▼			▼▼▼ ▽	
Cast Iron	K	▽▽▽			▽▽▽				▽▽▽ ▽					▽▽▽ ▽			▽▽▽ ▽	
Non-Ferrous Materials	N	▽▽▽			▽▽▽				▼▼▼ ▼		▼▼▼ ▼							
Titanium	S								▽▽▽ ▽								▼▼▼ ▼	
Hard Materials	H																	

Geometry	Radius mm	Radius in	Description	ISO Description	Part No.	WHT10	WHT12	WHT16	WHT32	WTC15	WTC121	WHW01	WHW16	WHC05	WHC18	WHC19	WHC79	WHC98	WHC111	WHC114	WHC136	WHC164
108	0.20	0.008	F10102MN108	CCMT060202	297833													●				
108	0.40	0.016	F10104MN108	CCMT060204	297537													●				
108	0.40	0.016	F10304MN108	CCMT09T304	297891													●				
108	0.80	0.031	F10308MN108	CCMT09T308	397118													●				
108	0.40	0.016	F10404MN108	CCMT120404	297725													●				
108	0.80	0.031	F10408MN108	CCMT120408	297724													●				
109	0.20	0.008	F10102MN109	CCMT060202	397352																●	
109	0.40	0.016	F10104MN109	CCMT060204	397765																●	
109	0.40	0.016	F10304MN109	CCMT09T304	397354																●	
109	0.80	0.031	F10308MN109	CCMT09T308	397355																●	
109	0.40	0.016	F10404MN109	CCMT120404	397356																●	
109	0.80	0.031	F10408MN109	CCMT120408	397357																●	
112	0.20	0.008	F10102GN112	CCGT060202	297485				◕													
112	0.40	0.016	F10104MN112	CCMT060204	297434				◕													
112	0.20	0.008	F10302GN112	CCGT09T302	297534				◕													
112	0.40	0.016	F10304MN112	CCMT09T304	297387				◕													
122	0.20	0.008	F10102MN122	CCMT060202	097899	●																
122	0.40	0.016	F10104MN122	CCMT060204	097926	●																
122	0.20	0.008	F10302MN122	CCMT09T302	097862	●																
122	0.40	0.016	F10304MN122	CCMT09T304	097957	●																
126	0.80	0.031	F10508MN126	CCMT160508	297557																◕	
126	1.20	0.047	F10512MN126	CCMT160512	297558																◕	
127	0.20	0.008	F10102GN127	CCGT060202	097529								●		●							
127	0.40	0.016	F10104GN127	CCGT060204	097445								●		●							
127	0.20	0.008	F10302GN127	CCGT09T302	297550								●		●							
127	0.40	0.016	F10304GN127	CCGT09T304	097497								●		●							
127	0.40	0.016	F10404GN127	CCGT120404	097496								●		●							

Insert Form	Countersunk Screw		Torque Driver	Service Key	Technical Data: Torque	Technical Data: Key Size
101	**115676**	M2.5 x 0.45 x 5	**415514**	**115590**	1.2 Nm	T8
103	**115672** (<Ø37 mm)	M3.5 x 0.6 x 7.5	**415510**	**115664**	3.0 Nm	T15
103	**115673** (>Ø36 mm)	M3.5 x 0.6 x 9	**415510**	**115664**	3.0 Nm	T15
104	**215149**	M4.5 x 0.75 x 11.5	**415543**	**215150**	5.0 Nm	T20
105	**215149**	M4.5 x 0.75 x 11.5	**415543**	**215150**	5.0 Nm	T20

Reference Key

Symbol	Machining Conditions
●	Good - Main Application
◕	Average - Main Application

Reference Key

Symbol	Insert Type
▼	Roughing - Main Application
▽	Roughing - Extended Application
▼▼▼	Finishing - Main Application
▽▽▽	Finishing - Extended Application

Insert Forms 101, 103, 104

Cermet | Carbide

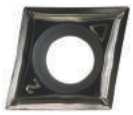

129 Geometry



145 Geometry



146 Geometry

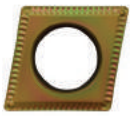

155 Geometry

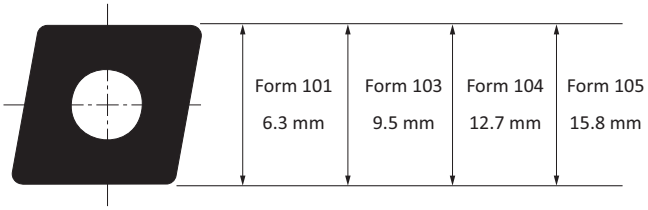

		Cermet				Carbide															
		Uncoated		Coated		Uncoated	Coated														
Steel	P			▼▼▼				▼▼▼ ▽			▼▼▼ ▼	▼▼▼ ▼		▼▼▼ ▼						
Stainless Steel	M			▽▽▽				▽▽▽				▼▼▼ ▼		▼▼▼ ▼						
Cast Iron	K			▽▽▽			▽▽▽ ▽	▼▼▼ ▼			▼▼▼ ▼			▼▼▼ ▼						
Non-Ferrous Materials	N						▼▼▼ ▼		▼▼▼ ▼											
Titanium	S						▽▽▽ ▽	▽▽▽ ▽				▼▼▼ ▼		▼▼▼ ▼						
Hard Materials	H										▽▽▽ ▽			▼▼▼ ▽						

Geometry	Radius mm	Radius in	Description	ISO Description	Part No.	WHT10	WHT32	WTC15	WTC121	WHW01	WHW16	WHC05	WHC18	WHC19	WHC79	WHC81	WHC88	WHC98	WHC111	WHC114	WHC136	WHC164
129	0.05	0.002	F101005GN129	CCGT0602005	**397738**						●	●										
129	0.10	0.004	F10101GN129	CCGT060201	**397737**						●	●										
129	0.20	0.008	F10102GN129	CCGT060202	**297545**						●	●	●									
129	0.40	0.016	F10104GN129	CCGT060204	**297546**						●	●	●									
129	0.20	0.008	F10302GN129	CCGT09T302	**297547**						●	●	●									
129	0.40	0.016	F10304GN129	CCGT09T304	**297548**						●	●	●									
145	0.40	0.016	F10104GN145	CCGT060204	**297980**														●			
145	0.80	0.031	F10108GN145	CCGT060208	**397742**														●			
145	0.40	0.016	F10304GN145	CCGT09T304	**297994**														●			
145	0.80	0.031	F10308GN145	CCGT09T308	**297995**														●			
146	0.40	0.016	F10104MN146	CCMT060204	**397953**											●	✱					
146	0.40	0.016	F10304MN146	CCMT09T304	**397142**											●	✱					
146	0.80	0.031	F10308MN146	CCMT09T308	**397946**											●	✱					
146	0.40	0.016	F10404MN146	CCMT120404	**397469**												✱					
146	0.80	0.031	F10408MN146	CCMT120408	**397143**											●	✱					
146	1.20	0.047	F10412MN146	CCMT120412	**397939**												✱					
155	0.20	0.008	F10102MN155	CCMT060202	**397662**			◕														
155	0.40	0.016	F10104MN155	CCMT060204	**397739**			◕														
155	0.40	0.016	F10304MN155	CCMT09T304	**397740**			◕														

Insert Form	Countersunk Screw		Torque Driver	Service Key	Technical Data: Torque	Technical Data: Key Size
101	**115676**	M2.5 x 0.45 x 5	**415514**	**115590**	1.2 Nm	T8
103	**115672** (<Ø37 mm)	M3.5 x 0.6 x 7.5	**415510**	**115664**	3.0 Nm	T15
103	**115673** (>Ø36 mm)	M3.5 x 0.6 x 9	**415510**	**115664**	3.0 Nm	T15
104	**215149**	M4.5 x 0.75 x 11.5	**415543**	**215150**	5.0 Nm	T20
105	**215149**	M4.5 x 0.75 x 11.5	**415543**	**215150**	5.0 Nm	T20

Reference Key

Symbol	Machining Conditions
●	Good - Main Application
◕	Average - Main Application

Reference Key

Symbol	Insert Type
▼	Roughing - Main Application
▽	Roughing - Extended Application
▼▼▼	Finishing - Main Application
▽▽▽	Finishing - Extended Application

Insert Forms 101, 103, 104

Carbide

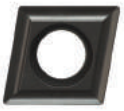

158 Geometry



174W Geometry



192 Geometry

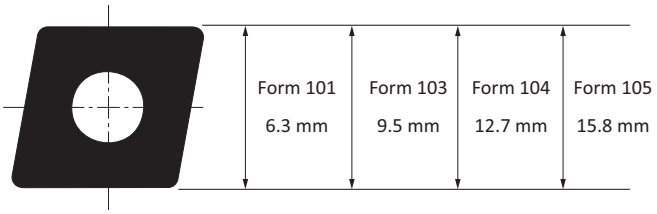

		Carbide										
		Uncoated		Coated								
Steel	P			▼▼▼ ▽		▼▼▼ ▼	▼▼▼ ▼		▼▼▼ ▼			▼▼▼ ▼
Stainless Steel	M			▽▽▽		▼▼▼ ▼	▽▽▽ ▽		▼▼▼ ▼			
Cast Iron	K			▼▼▼ ▼		▽▽▽ ▽	▼▼▼ ▼		▼▼▼ ▼			▼▼▼ ▼
Non-Ferrous Materials	N											
Titanium	S					▼▼▼ ▼			▼▼▼ ▼			
Hard Materials	H								▼▼▼ ▼			▽▽▽

Geometry	Radius mm	Radius in	Description	ISO Code	Part No.	WHW01	WHW16	WHC05	WHC18	WHC19	WHC79	WHC98	WHC111	WHC114	WHC136	WHC164
158	0.20	0.008	F10102MN158	CCMT060202	297248						◕		●			
158	0.40	0.016	F10104MN158	CCMT060204	297377						◕		●			
158	0.40	0.016	F10304MN158	CCMT09T304	297239						◕		●			
158	0.80	0.031	F10308MN158	CCMT09T308	297240						◕		●			
158	0.40	0.016	F10404MN158	CCMT120404	297242						◕		●			
158	0.80	0.031	F10408MN158	CCMT120408	297241						◕		●			
158	0.80	0.031	F10508MN158	CCMT160508	297559			●			◕					
158	1.20	0.047	F10512MN158	CCMT160512	297560						◕					
174W	0.40	0.016	F10104MN174W	CCMT060204	397766					✱						◕
174W	0.40	0.016	F10304MN174W	CCMT09T304	397767					✱						◕
174W	0.80	0.031	F10308MN174W	CCMT09T308	397768											◕
192	0.20	0.008	F10102MN192	CCMT060202	297531					✱						◕
192	0.40	0.016	F10104MN192	CCMT060204	297658					✱						◕
192	0.80	0.031	F10108MN192	CCMT060208	297588					✱						◕
192	0.20	0.008	F10302MN192	CCMT09T302	297958					✱						
192	0.40	0.016	F10304MN192	CCMT09T304	297653					✱						◕
192	0.80	0.031	F10308MN192	CCMT09T308	397614					✱						◕
192	0.40	0.016	F10404MN192	CCMT120404	397666					✱						◕
192	0.80	0.031	F10408MN192	CCMT120408	297878					✱						◕
192	1.20	0.047	F10412MN192	CCMT120412	397632											◕

Insert Form	Countersunk Screw		Torque Driver	Service Key	Technical Data: Torque	Technical Data: Key Size
101	**115676**	M2.5 x 0.45 x 5	**415514**	**115590**	1.2 Nm	T8
103	**115672** (<Ø37 mm)	M3.5 x 0.6 x 7.5	**415510**	**115664**	3.0 Nm	T15
103	**115673** (>Ø36 mm)	M3.5 x 0.6 x 9	**415510**	**115664**	3.0 Nm	T15
104	**215149**	M4.5 x 0.75 x 11.5	**415543**	**215150**	5.0 Nm	T20
105	**215149**	M4.5 x 0.75 x 11.5	**415543**	**215150**	5.0 Nm	T20

Reference Key

Symbol	Machining Conditions
●	Good - Main Application
◕	Average - Main Application
✱	Difficult - Main Application

Reference Key

Symbol	Insert Type
▼	Roughing - Main Application
▽	Roughing - Extended Application
▼▼▼	Finishing - Main Application
▽▽▽	Finishing - Extended Application

Insert Forms 101, 103, 104

Cermet | Carbide



199 Geometry | 200 Geometry | 711 Geometry | 860 Geometry

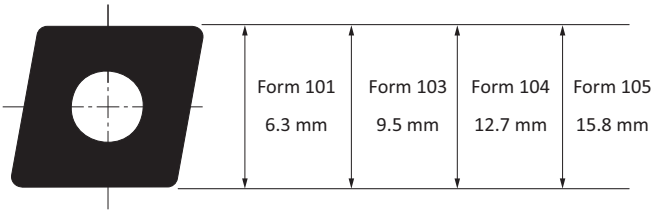

		Cermet						Carbide											
		Uncoated				Coated		Uncoated	Coated										
Steel	P					▼▼▼				▼▼▼ ▼			▼▼▼ ▼			▼▼▼ ▼	▼▼▼ ▼	▼▼▼ ▼	
Stainless Steel	M					▽▽▽				▼▼▼ ▽						▼▼▼ ▼	▼▼▼ ▼	▼▼▼ ▼	
Cast Iron	K							▽▽▽ ▽		▼▼▼ ▼			▼▼▼ ▼			▼▼▼ ▼	▽▽▽ ▽	▽▽▽ ▽	
Non-Ferrous Materials	N							▼▼▼ ▼											
Titanium	S															▼▼▼ ▼	▼▼▼ ▼	▼▼▼ ▼	
Hard Materials	H												▽▽▽			▼▼▼ ▽			

Geometry	Radius mm	Radius in	Description	ISO Code	Part No.	WHT10	WHT12	WHT16	WHT32	WTC15	WTC121	WHW01	WHW16	WHC05	WHC18	WHC19	WHC77	WHC79	WHC98	WHC111	WHC114	WHC136	WHC164
199	0.20	0.008	F10102MN199	CCMT060202	397164																●		
199	0.40	0.016	F10104MN199	CCMT060204	397165																●		
199	0.20	0.008	F10302MN199	CCMT09T302	397702																●		
199	0.40	0.016	F10304MN199	CCMT09T304	397166																●		
199	0.80	0.031	F10308MN199	CCMT09T308	397167																●		
199	0.40	0.016	F10404MN199	CCMT120404	397191																●		
199	0.80	0.031	F10408MN199	CCMT120408	397168																●		
200	0.20	0.008	F10102GN200	CCGT060202	397585															●			
200	0.40	0.016	F10104GN200	CCGT060204	397586															●			
200	0.20	0.008	F10302GN200	CCGT09T302	397587															●			
200	0.40	0.016	F10304GN200	CCGT09T304	397588															●			
200	0.40	0.016	F10404GN200	CCGT120404	397589															●			
711	0.40	0.016	F10104MN711	CCMT060204	097637												●						
711	0.40	0.016	F10304MN711	CCMT09T304	097629												●						
711	0.80	0.031	F10308MN711	CCMT09T308	297910												●						
711	0.80	0.031	F10408MN711	CCMT120408	297911												●						
860	0.10	0.004	F10101GL860	CCGT060201	097324						◕	●		●								◕	
860	0.20	0.008	F10102GL860	CCGT060202	097241						◕	●		●								◕	
860	0.40	0.016	F10104GL860	CCGT060204	097242							●		●								◕	
860	0.20	0.008	F10302GL860	CCGT09T302	097245							●		●								◕	
860	0.40	0.016	F10304GL860	CCGT09T304	097244							●		●								◕	
860	0.40	0.016	F10404GL860	CCGT120404	097738							●										◕	
860	0.80	0.031	F10408GL860	CCGT120408	097247							●		●								◕	
860	0.80	0.031	F10508ML860	CCMT160508	097249							●		●								◕	

Insert Form	Countersunk Screw		Torque Driver	Service Key	Technical Data: Torque	Technical Data: Key Size
101	**115676**	M2.5 x 0.45 x 5	**415514**	**115590**	1.2 Nm	T8
103	**115672** (<Ø37 mm)	M3.5 x 0.6 x 7.5	**415510**	**115664**	3.0 Nm	T15
103	**115673** (>Ø36 mm)	M3.5 x 0.6 x 9	**415510**	**115664**	3.0 Nm	T15
104	**215149**	M4.5 x 0.75 x 11.5	**415543**	**215150**	5.0 Nm	T20
105	**215149**	M4.5 x 0.75 x 11.5	**415543**	**215150**	5.0 Nm	T20

Reference Key

Symbol	Machining Conditions
●	Good - Main Application
◕	Average - Main Application

Reference Key

Symbol	Insert Type
▼	Roughing - Main Application
▽	Roughing - Extended Application
▼▼▼	Finishing - Main Application
▽▽▽	Finishing - Extended Application

Insert Forms 101, 103, 104

Ceramic | CBN | PCD

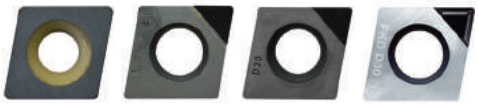

711 Geometry 720 Geometry 730 Geometry 735 Geometry

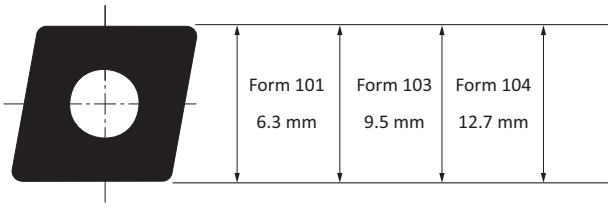

		Ceramic					CBN								PCD			
		Uncoated			Coated		Uncoated						Coated					
Steel	P																	
Stainless Steel	M																	
Cast Iron	K	▼								▼▼▼ ▼								
Non-Ferrous Materials	N														▼▼▼ ▼	▼▼▼ ▼		
Titanium	S																	
Hard Materials	H																	

Geometry	Radius mm	Radius in	Description	ISO Code	Part No.	WCN06					WBN150	WBN200	WBN300	WBN450					PKDD30	PKDD50		
711	0.40	0.016	F10304GN711	CCGW09T304	**297561**	●																
711	0.80	0.031	F10308GN711	CCGW09T308	**297192**	●																
711	0.80	0.031	F10408GN711	CCGW120408	**297249**	●																
711	1.20	0.047	F10412GN711	CCGW120412	**297234**	●																
720	0.20	0.008	F10102GN720	CCGT060202	**297501**														◕			
720	0.40	0.016	F10104GN720	CCGT060204	**297502**														◕			
720	0.20	0.008	F10302GN720	CCGT09T302	**297578**														◕			
720	0.40	0.016	F10304GN720	CCGT09T304	**297483**														◕			
730	0.20	0.008	F10102GN730	CCGW060202	**097462**														◕	◕		
730	0.40	0.016	F10104GN730	CCGW060204	**297164**														◕	◕		
730	0.80	0.031	F10108GN730	CCGW060208	**297165**														◕			
730	0.20	0.008	F10302GN730	CCGW09T302	**397251**														◕	◕		
730	0.40	0.016	F10304GN730	CCGW09T304	**297533**														◕	◕		
730	0.40	0.016	F10404GN730	CCGW120404	**397257**														◕	◕		
730	0.80	0.031	F10408GN730	CCGW120408	**297871**														◕	◕		
735	0.20	0.008	F10102GN735	CCGT060202	**297872**														◕			
735	0.40	0.016	F10104GN735	CCGT060204	**397244**														◕			
735	0.20	0.008	F10302GN735	CCGT09T302	**397252**														◕			
735	0.40	0.016	F10304GN735	CCGT09T304	**297870**														◕			

Reference Key

Symbol	Machining Conditions
●	Good - Main Application
◕	Average - Main Application
✸	Difficult - Main Application

Reference Key

Symbol	Insert Type
▼	Roughing - Main Application
▽	Roughing - Extended Application
▼▼▼	Finishing - Main Application
▽▽▽	Finishing - Extended Application

Insert Form	Countersunk Screw		Torque Driver	Service Key	Technical Data: Torque	Technical Data: Key Size
101	**115676**	M2.5 x 0.45 x 5	**415514**	**115590**	1.2 Nm	T8
103	**115672** (<Ø37 mm)	M3.5 x 0.6 x 7.5	**415510**	**115664**	3.0 Nm	T15
103	**115673** (>Ø36 mm)	M3.5 x 0.6 x 9	**415510**	**115664**	3.0 Nm	T15
104	**215149**	M4.5 x 0.75 x 11.5	**415543**	**215150**	5.0 Nm	T20

Insert Forms 101, 103, 104

CBN

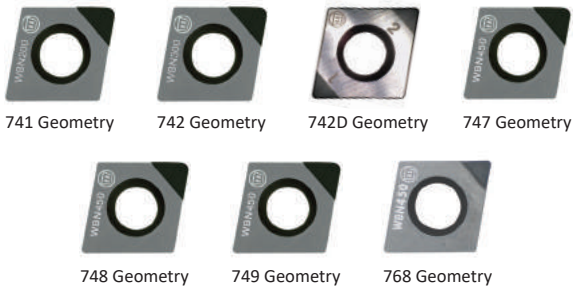

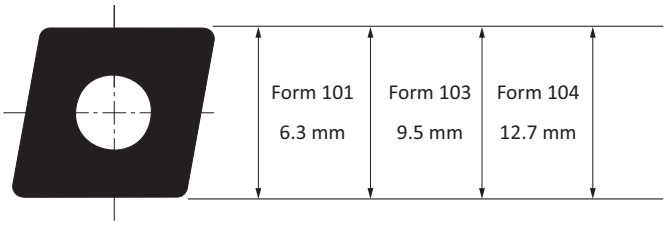

		CBN							
		Uncoated						Coated	
Steel	P								
Stainless Steel	M								
Cast Iron	K	▽▽▽ ▽		▼▼▼ ▽	▼▼▼ ▼	▼▼▼ ▼			
Non-Ferrous Materials	N								
Titanium	S								
Hard Materials	H	▼▼▼ ▽	▼▼▼ ▽	▼▼▼ ▽				▼▼▼ ▽	

Geometry	Radius mm	Radius in	Description	ISO Code	Part No.	WBN150	WBN200	WBN300	WBN450	WBN448		WBC300	
741	0.20	0.008	F10102GN741	CCGW060202	**297290**		◕						
741	0.40	0.016	F10104GN741	CCGW060204	**297291**		◕						
741	0.40	0.016	F10304GN741	CCGW09T304	**297303**		◕						
742	0.20	0.008	F10102GN742	CCGW060202	**297293**			●					
742	0.40	0.016	F10104GN742	CCGW060204	**297294**			●					
742	0.40	0.016	F10304GN742	CCGW09T304	**297306**			●					
742D	0.20	0.008	F10102GN742D	CCGW060202	**397949**					●		●	
742D	0.40	0.016	F10104GN742D	CCGW060204	**397999**					●		●	
742D	0.40	0.016	F10304GN742D	CCGW090204	**397931**					●		●	
742D	0.80	0.031	F10308GN742D	CCGW090208	**397958**					●		●	
747	0.40	0.016	F10404GN747	CCGW120404	**397260**	◕			◕				
748	0.20	0.008	F10102GN748	CCGW060202	**297787**				◕				
748	0.40	0.016	F10104GN748	CCGW060204	**297788**				◕				
748	0.20	0.008	F10302GN748	CCGW09T302	**297790**				◕				
748	0.40	0.016	F10304GN748	CCGW09T304	**297419**				◕				
749	0.80	0.031	F10408GN749	CCGW120408	**397261**	◕			◕				
768	0.20	0.008	F10102GN768	CCGT060202	**297486**				◕				
768	0.40	0.016	F10104GN768	CCGT060204	**297659**				◕				
768	0.20	0.008	F10302GN768	CCGT09T302	**397439**				◕				
768	0.40	0.016	F10304GN768	CCGT09T304	**297660**								

Insert Form	Countersunk Screw		Torque Driver	Service Key	Technical Data: Torque	Technical Data: Key Size
101	**115676**	M2.5 x 0.4 x 5	**415514**	**115590**	1.2 Nm	T8
103	**115672** (<Ø37 mm)	M3.5 x 0.6 x 7.5	**415510**	**115664**	3.0 Nm	T15
103	**115673** (>Ø36 mm)	M3.5 x 0.6 x 9	**415510**	**115664**	3.0 Nm	T15
104	**215149**	M4.5 x 0.75 x 11.5	**415543**	**215150**	5.0 Nm	T20

Reference Key

Symbol	Machining Conditions
●	Good - Main Application
◕	Average - Main Application

Reference Key

Symbol	Insert Type
▼	Roughing - Main Application
▽	Roughing - Extended Application
▼▼▼	Finishing - Main Application
▽▽▽	Finishing - Extended Application

Insert Form 39

Cermet | Carbide



121 Geometry | 127 Geometry | 129 Geometry | 146 Geometry



155 Geometry | 192 Geometry | 200 Geometry

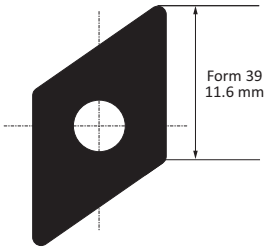

		Cermet						Carbide											
		Uncoated				Coated		Uncoated	Coated										
Steel	P					▼▼▼				▼▼▼ ▼	▼▼▼ ▼	▼▼▼ ▽		▼▼▼ ▽			▼▼▼ ▼	▼▼▼ ▼
Stainless Steel	M					▽▽▽				▽▽▽ ▽		▼▼▼ ▽		▼▼▼ ▽				▼▼▼ ▼
Cast Iron	K					▽▽▽			▽▽▽ ▽	▼▼▼ ▼	▼▼▼ ▼			▼▼▼ ▼			▼▼▼ ▼	▽▽▽ ▽
Non-Ferrous Materials	N							▼▼▼ ▼										
Titanium	S								▽▽▽			▼▼▼ ▽		▼▼▼ ▽				▼▼▼ ▼
Hard Materials	H										▽▽▽			▼▼▼			▽▽▽	

Geometry	Radius mm	Radius in	Description	ISO Code	Part No.	WHT10	WHT12	WHT16	WHT32	WTC15	WTC121	WHW01	WHW16	WHC05	WHC81	WHC88	WHC98	WHC111	WHC114	WHC136	WHC164	WHC190
121	0.20	0.008	F03902MN121	DCMT11T302	397787																	✱
121	0.40	0.016	F03904MN121	DCMT11T304	397788																	✱
127	0.20	0.008	F03702GN127	DCGT070202	397234								●									
127	0.40	0.016	F03704GN127	DCGT070204	097787								●									
127	0.20	0.008	F03902GN127	DCGT11T302	397235								●									
127	0.40	0.016	F03904GN127	DCGT11T304	097559								●									
129	0.20	0.008	F03702GN129	DCGT070202	397708								●									
129	0.20	0.008	F03902GN129	DCGT11T302	397816								●	●								
129	0.40	0.016	F03904GN129	DCGT11T304	397817								●	●								
146	0.40	0.016	F03704MN146	DCMT070204	397968										●	✱						
146	0.80	0.031	F03708MN146	DCMT070208	397047											✱						
146	0.40	0.016	F03904MN146	DCMT11T304	397591										●	✱						
146	0.80	0.031	F03908MN146	DCMT11T308	397598										●	✱						
155	0.20	0.008	F03902MN155	DCMT11T302	397809					◕												
155	0.40	0.016	F03904MN155	DCMT11T304	397810					◕												
192	0.20	0.008	F03902MN192	DCMT11T302	397783																◕	✱
192	0.40	0.016	F03904MN192	DCMT11T304	297721																◕	✱
192	0.80	0.031	F03908MN192	DCMT11T308	397784																◕	✱
200	0.20	0.008	F03902GN200	DCGT11T302	397785													●				
200	0.40	0.016	F03904GN200	DCGT11T304	397786													●				

Reference Key

Symbol	Machining Conditions
●	Good - Main Application
◕	Average - Main Application
✱	Difficult - Main Application

Reference Key

Symbol	Insert Type
▼	Roughing - Main Application
▽	Roughing - Extended Application
▼▼▼	Finishing - Main Application
▽▽▽	Finishing - Extended Application

Insert Form	Countersunk Screw		Torque Driver	Service Key	Technical Data: Torque	Technical Data: Key Size
39	115673	M3.5 x 0.6 x 9	414510	115664	3.0 Nm	T15

Insert Form 39

CBN | PCD



730 Geometry 735 Geometry 747 Geometry

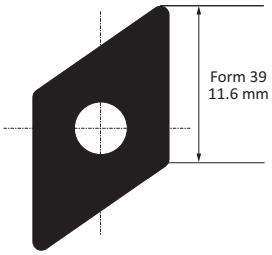

		CBN								PCD			
		Uncoated						Coated					
Steel	P												
Stainless Steel	M												
Cast Iron	K	▽▽▽			▼▼▼								
Non-Ferrous Materials	N									▼▼▼			
Titanium	S												
Hard Materials	H	▼▼▼ ▽											

Geometry	Radius mm	Radius in	Description	ISO Code	Part No.	WBN150	WBN200	WBN300	WBN450	WBN200				PKDD30	PKDD50		
730	0.20	0.008	F03902GN730	DCGW11T302	**397269**									●			
730	0.40	0.016	F03904GN730	DCGW11T304	**397270**									●			
735	0.20	0.008	F03902GN735	DCGT11T302	**397271**									●			
735	0.40	0.016	F03904GN735	DCGT11T304	**397272**									●			
747	0.20	0.008	F03902GN747	DCGW11T302	**397273**	●			●								
747	0.40	0.016	F03904GN747	DCGW11T304	**397274**	●			●								

Reference Key

Symbol	Machining Conditions
●	Average - Main Application
✹	Difficult - Main Application

Reference Key

Symbol	Insert Type
▼	Roughing - Main Application
▽	Roughing - Extended Application
▼▼▼	Finishing - Main Application
▽▽▽	Finishing - Extended Application

Insert Form	Countersunk Screw		Torque Driver	Service Key	Technical Data: Torque	Technical Data: Key Size
39	**115673**	M3.5 x 0.6 x 9	**414510**	**115664**	3.0 Nm	T15

Insert Forms 112, 113, 114

Carbide


108 Geometry


127 Geometry


145 Geometry


146 Geometry


158 Geometry


192 Geometry


199 Geometry


711 Geometry

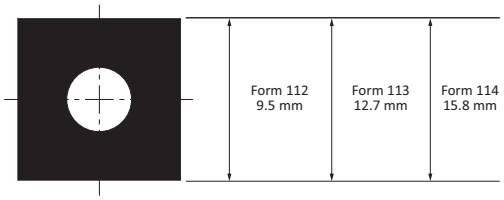

		Carbide														
		Uncoated		Coated												
Steel	P				▼	▼	▼	▼	▼	▼	▼	▼		▼	▼	
Stainless Steel	M				▼		▽		▼	▼	▼	▼			▼	
Cast Iron	K		▽		▽	▼	▼	▼		▽	▼	▽		▼	▽	
Non-Ferrous Materials	N		▼													
Titanium	S		▽		▼				▼		▼	▼			▼	
Hard Materials	H					▽		▽			▽			▽		

Geometry	Radius mm	Radius in	Description	ISO Code	Part No.	WHW01	WHW16	WHC05	WHC30	WHC77	WHC79	WHC81	WHC88	WHC98	WHC111	WHC114	WHC136	WHC164	WHC190
108	0.40	0.016	F11204MN108	SCMT09T304	**297535**									◕					
108	0.80	0.031	F11308MN108	SCMT120408	**397110**									◕					
127	0.40	0.016	F11204GN127	SCGT09T304	**097539**		●												
127	0.40	0.016	F11304GN127	SCGT120404	**397590**		●												
127	0.80	0.031	F11308GN127	SCGT120408	**097566**		●												
145	0.80	0.031	F11208GN145	SCGT09T308	**297996**										●				
145	0.80	0.031	F11308GN145	SCGT120408	**297997**										●				
146	0.40	0.016	F11204MN146	SCMT09T304	**397940**							●	✱						
146	0.80	0.031	F11208MN146	SCMT09T308	**397992**							●	✱						
146	0.40	0.016	F11304MN146	SCMT12T304	**397049**								✱						
146	0.80	0.031	F11308MN146	SCMT12T308	**397969**							●	✱						
158	0.80	0.031	F11308MN158	SCMT120408	**297497**						◕								
158	1.20	0.047	F11412MN158	SCMT150512	**097252**				✱										
192	0.40	0.016	F11204MN192	SCMT09T304	**397741**													◕	✱
192	0.80	0.031	F11208MN192	SCMT09T308	**397640**													◕	✱
192	0.80	0.031	F11308MN192	SCMT120408	**397709**													◕	✱
192	1.20	0.047	F11312MN192	SCMT120412	**397710**														✱
199	0.40	0.016	F11204MN199	SCMT09T304	**397703**											◕			
199	0.80	0.031	F11208MN199	SCMT09T308	**397704**											◕			
199	0.80	0.031	F11308MN199	SCMT120408	**397705**											◕			
711	0.80	0.031	F11308MN711	SCMT120408	**297212**					◕									

Reference Key

Symbol	Machining Conditions
●	Good - Main Application
◕	Average - Main Application
✱	Difficult - Main Application

Insert Form	Countersunk Screw		Torque Driver	Service Key	Technical Data: Torque	Technical Data: Key Size
112	**115672** (<Ø37 mm)	M3.5 x 0.6 x 7.5	**415510**	**115664**	3.0 Nm	T15
112	**115673** (>Ø36 mm)	M3.5 x 0.6 x 9	**415510**	**115664**	3.0 Nm	T15
113	**215149**	M4.5 x 0.75 x 11.5	**415543**	**215150**	5.0 Nm	T20
114	**215149**	M4.5 x 0.75 x 11.5	**415543**	**215150**	5.0 Nm	T20

Reference Key

Symbol	Insert Type
▼	Roughing - Main Application
▽	Roughing - Extended Application
▽▽▽	Finishing - Extended Application

Insert Forms 04, 05

Carbide



880 Geometry



811 Geometry

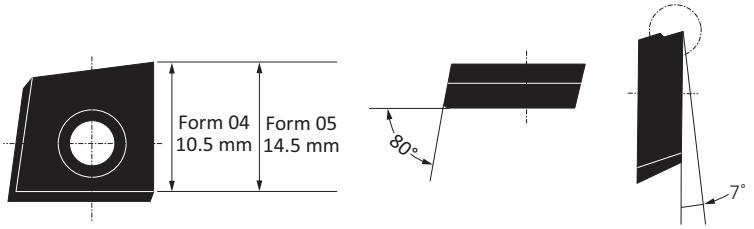

		Carbide										
		Uncoated		Coated								
Steel	P									▼	▼	▼
Stainless Steel	M									▽	▽	▼
Cast Iron	K									▼	▼	▼
Non-Ferrous Materials	N											▽
Titanium	S											▽
Hard Materials	H											

Geometry	Radius mm	Radius in	Description	ISO Code	Part No.	WHW16	WHC05	WHC18	WHC19	WHC79	WHC98	WHC111	WHC114	WHC170	WHC168	WHC198
880	0.40	0.016	F00404ML880	–	**397595**											●
880	0.40	0.016	F00504ML880	–	**397593**										■	●
880	0.80	0.031	F00508ML880	–	**397594**									■	■	●
811	0.80	0.031	F00508ML811	–	**397844**										■	

Reference Key

Symbol	Machining Conditions
●	Average - Main Application
■	Difficult - Main Application

Insert Form	Countersunk Screw		Torque Driver	Service Key	Technical Data: Torque	Technical Data: Key Size
04	**415977**	M4 x 0.7 x 7.9	**415510**	**115664**	3.0 Nm	T15
05	**415949**	M4 x 0.7 x 11	**415543**	**215150**	5.0 Nm	T20

Reference Key

Symbol	Insert Type
▼	Roughing - Main Application
▽	Roughing - Extended Application

Radial Grooving Insert Forms 89, 90, 91

Carbide



Insert Form 89



Insert Form 90



Insert Form 91

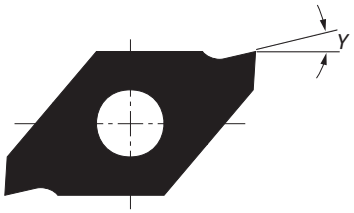

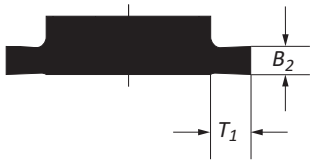

							Carbide											
							Uncoated			Coated								
Steel	P															▼▼		
Stainless Steel	M															▽▽		
Cast Iron	K								▽▽							▼▼		
Non-Ferrous Materials	N								▼▼									
Titanium	S								▽▽							▼▼		
Hard Materials	H																	
	Insert Form	B_2	Y	T_1	Ring Width	Part No.	WHW01	WHW16	WHW20	WHC05	WHC18	WHC19	WHC79	WHC98	WHC111	WHC114	WHC136	WHC164
	89	1.24	13°	1.30	1.00	097257			●								●	
	89	1.44	13°	1.30	1.20	097258			●								●	
	89	1.74	13°	1.50	1.50	097259			●								●	
	90	1.99	9°	2.40	1.75	097256			●								●	
	90	2.29	9°	2.40	2.00	097253			●								●	
(m)	90	2.79	9°	2.40	2.50	097254			●								●	
	90	3.29	9°	2.40	3.00	097255			●								●	
	91	2.79	9°	2.40	2.50	097260			●								●	
	91	3.29	9°	2.40	3.00	097261			●								●	
	91	4.29	9°	3.30	4.00	097262			●								●	
	91	5.29	9°	4.50	5.00	097294			●								●	

Insert Form	Countersunk Screw		Torque Driver	Service Key	Technical Data: Torque	Technical Data: Key Size
89	**115676**	M2.5 x 0.45 x 5	**415514**	**115590**	1.2 Nm	T8
90	**115531**	M3 x 0.5 x 7.5	**415514**	**115590**	1.2 Nm	T8
91	**115802**	M3 x 0.5 x 12	**415514**	**115590**	1.2 Nm	T8

Reference Key

Symbol	Machining Conditions
●	Average - Main Application

Reference Key

Symbol	Insert Type
▼▼	Universal - Main Application
▽▽	Universal - Extended Application

Radial Grooving Insert Forms 89, 90, 91

Carbide



Insert Form 89 Insert Form 90 Insert Form 91

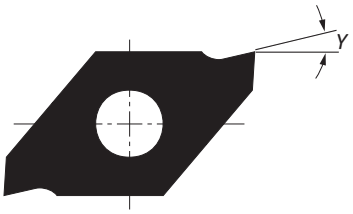

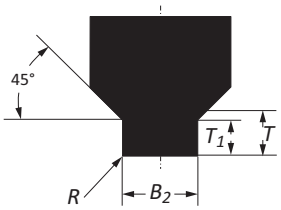

		Carbide											
		Uncoated			Coated								
Steel	P											▼▼	
Stainless Steel	M											▽▽	
Cast Iron	K											▼▼	
Non-Ferrous Materials	N												
Titanium	S											▼▼	
Hard Materials	H												

	Insert Form	Boring Ø	B_2	Y	R	T_1	T	Ring Width	Part No.	WHW01	WHW16	WHW20	WHC05	WHC18	WHC19	WHC79	WHC98	WHC111	WHC114	WHC136	WHC164
	89	24.00 - 26.00	1.44	13°	0.10	0.54	0.65	1.20	**297937**											●	
	89	28.00 - 30.00	1.44	13°	0.10	0.64	0.75	1.20	**297938**											●	
	89	31.00 - 32.00	1.44	13°	0.10	0.78	0.91	1.20	**297939**											●	
	89	34.00	1.74	13°	0.10	0.78	0.91	1.50	**297940**											●	
	89	35.00 - 38.00	1.74	13°	0.10	0.93	1.06	1.50	**297941**											●	
m	90	40.00 - 48.00	1.99	9°	0.15	1.18	1.31	1.75	**297942**											●	
	90	50.00 - 63.00	2.29	9°	0.15	1.43	1.58	2.00	**297943**											●	
	91	65.00 - 78.00	2.79	9°	0.20	1.43	1.58	2.50	**297944**											●	
	91	80.00 - 82.00	2.79	9°	0.20	1.68	1.84	2.50	**297945**											●	
	91	85.00 - 100.00	3.29	9°	0.20	1.68	1.84	3.00	**297946**											●	
	91	102.00 - 145.00	4.29	9°	0.20	1.94	2.14	4.00	**297947**											●	

Insert Form	Countersunk Screw		Torque Driver	Service Key	Technical Data Torque	Technical Data Key Size
89	**115676**	M2.5 x 0.45 x 5	**415514**	**115590**	1.2 Nm	T8
90	**115531**	M3 x 0.5 x 7.5	**415514**	**115590**	1.2 Nm	T8
91	**115802**	M3 x 0.5 x 12	**415514**	**115590**	1.2 Nm	T8

Reference Key

Symbol	Machining Conditions
●	Average - Main Application

Reference Key

Symbol	Insert Type
▼▼	Universal - Main Application
▽▽	Universal - Extended Application

Axial Grooving Insert Blanks Form 304

Carbide



				Carbide										
				Uncoated			Coated							
Steel	P													
Stainless Steel	M													
Cast Iron Non-Ferrous Materials	K					▽▽								
Non-Ferrous Materials	N					▼▼								
Titanium	S					▽▽								
Hard Materials	H													
	Geometry	S_1	Part No.	WHW01	WHW16	WHW20	WHC05	WHC18	WHC19	WHC79	WHC98	WHC111	WHC114	WHC136	WHC164
m		3.50	297150			●									
		4.30	297151			●									
		5.30	297152			●									
		6.50	297154			●									
		7.50	297493			●									
		3.50	397850			●									
		4.30	397851			●									
		5.30	397852			●									
		6.50	397853			●									
		7.50	397854			●									

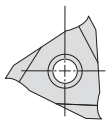

Other insert types available upon request.



Two-Sided Cutting Form

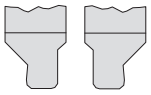

Single-Sided Cutting Form (Right / Left)



Two-Sided Angle Cutting



With Corner Radius



Full Radius

Reference Key

Symbol	Machining Conditions
●	Average - Main Application

Reference Key

Symbol	Insert Type
▼▼	Universal - Main Application
▽▽	Universal - Extended Application

Insert Form	Countersunk Screw		Torque Driver	Service Key	Technical Data: Torque	Technical Data: Key Size
304	215392	M5 x 0.8 x 12.9	415543	215150	5.0 Nm	T20

Axial Grooving O-Rings for Single Cutter Tools Insert Form 304

Carbide

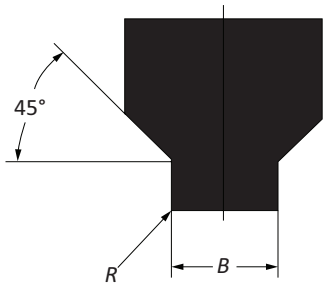

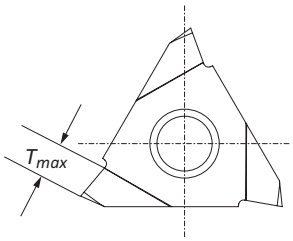

		Carbide												
		Uncoated			Coated									
Steel	P											▼▼		
Stainless Steel	M											▽▽		
Cast Iron Non-Ferrous Materials	K											▼▼		
Non-Ferrous Materials	N													
Titanium	S											▼▼		
Hard Materials	H													

	Geometry	Boring Range	O-Ring Cross Section	$B + 0.05$	B_{max}	T_{max}	$R \pm 0.05$	Part No.	WHW01	WHW16	WHW20	WHC05	WHC18	WHC19	WHC79	WHC98	WHC111	WHC114	WHC136	WHC164
m		20 - 54	1.00	1.50	1.50	1.65	0.20	**297969**											●	
		20 - 54	1.50	2.20	2.20	2.35	0.30	**297970**											●	
		20 - 54	2.00	2.90	2.90	3.15	0.40	**297971**											●	
		20 - 54	2.50	3.50	3.50	3.85	0.50	**297972**											●	
		20 - 54	3.00	4.10	4.10	4.45	0.60	**297973**											●	
		20 - 54	4.00	5.40	5.40	4.95	0.80	**297974**											●	
		20 - 54	5.00	6.80	6.80	4.95	0.80	**297975**											●	

Insert Form	Countersunk Screw		Torque Driver	Service Key	Technical Data: Torque	Technical Data: Key Size
304	**215392**	M5 x 0.8 x 12.9	**415543**	**215150**	5.0 Nm	T20

Reference Key

Symbol	Machining Conditions
●	Average - Main Application

Reference Key

Symbol	Insert Type
▼▼	Universal - Main Application
▽▽	Universal - Extended Application

Axial Grooving O-Rings for Twin Cutter Tools Insert Form 304

Carbide

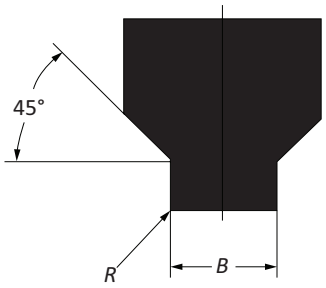

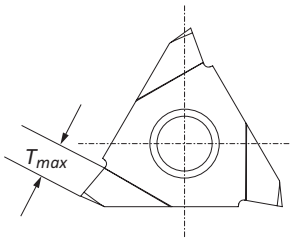

											Carbide										
											Uncoated			Coated							
Steel	P																		▼▼		
Stainless Steel	M																		▽▽		
Cast Iron Non-Ferrous Materials	K																		▼▼		
Non-Ferrous Materials	N																				
Titanium	S																		▼▼		
Hard Materials	H																				
	Geometry	Boring Range	O-Ring Cross Section	*B + 0.05*	B_{max}	T_{max}	*R ± 0.05*	Part No.	WHW01	WHW16	WHW20	WHC05	WHC18	WHC19	WHC79	WHC98	WHC111	WHC114	WHC136	WHC164
ⓜ		53.00 - 1000.00	1.00 - 1.50	1.50	2.50	1.65	0.20	**297976**											●	
		53.00 - 1000.00	1.50 - 2.40	2.20	3.70	2.35	0.30	**297977**											●	
		53.00 - 1000.00	2.40 - 4.00	3.40	5.70	3.65	0.50	**297978**											●	
		53.00 - 1000.00	4.00 - 5.50	5.40	9.10	4.95	0.80	**297979**											●	

Reference Key

Symbol	Machining Conditions
●	Average - Main Application

Insert Form	Countersunk Screw		Torque Driver	Service Key	Technical Data: Torque	Technical Data: Key Size
304	**215392**	M5 x 0.8 x 12.9	**415543**	**215150**	5.0 Nm	T20

Reference Key

Symbol	Insert Type
▼▼	Universal - Main Application
▽▽	Universal - Extended Application

Insert Form 325

Carbide

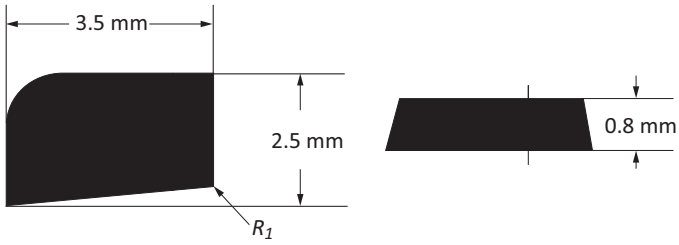

		Carbide											
		Uncoated			Coated								
Steel	P											▼▼▼	
Stainless Steel	M											▼▼▼	
Cast Iron Non-Ferrous Materials	K			▼▼▼								▽▽▽	
Non-Ferrous Materials	N			▽▽▽									
Titanium	S											▼▼▼	
Hard Materials	H												

Geometry	Radius R_1	Description	Part No.	WHW01	WHW16	WHW20	WHC05	WHC18	WHC19	WHC79	WHC98	WHC111	WHC114	WHC136	WHC164
860	0.10	**F32501CN860**	**097831**			◕								◕	

Insert Form	Countersunk Screw		Clamping Jaw	Torque Driver	Service Key	Technical Data: Torque	Technical Data: Key Size
325	**315321**	M1.6 x 0.35 x 3	**315320**	-	**315322**	0.3 Nm	0.5x3

Reference Key

Symbol	Machining Conditions
◕	Average - Main Application

Reference Key

Symbol	Insert Type
▼▼▼	Finishing - Main Application
▽▽▽	Finishing - Extended Application

Insert Accessories

Countersunk Screws | Torque Drivers

				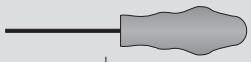		Technical Data	
Insert Form	**Countersunk Screw**		**Clamping Jaw**	**Torque Driver**	**Service Key**	**Torque**	**Key Size**
04	**415977**	M4 x 0.7 x 7.9	–	**415510**	**115664**	3.0 Nm	T15
05	**415949**	M4 x 0.7 x 11	–	**415543**	**215150**	5.0 Nm	T20
20	**115535**	M2 x 0.4 x 5	–	**415508**	**115591**	0.9 Nm	T7
39	**115673**	M3.5 x 0.6 x 9	–	**414510**	**115664**	3.0 Nm	T15
47	**315324**	M1.8 x 0.35 x 4	**315323**	**–**	**115537**	0.5 Nm	T6
89	**115676**	M2.5 x 0.45 x 5	–	**415514**	**115590**	1.2 Nm	T8
90	**115531**	M3 x 0.5 x 7.5	–	**415514**	**115590**	1.2 Nm	T8
91	**115802**	M3 x 0.5 x 12	–	**415514**	**115590**	1.2 Nm	T8
101	**115676**	M2.5 x 0.45 x 5	–	**415514**	**115590**	1.2 Nm	T8
103	**115672 (<Ø37 mm)**	M3.5 x 0.6 x 7.5	–	**415510**	**115664**	3.0 Nm	T15
103	**115673 (>Ø36 mm)**	M3.5 x 0.6 x 9	–	**415510**	**115664**	3.0 Nm	T15
104	**215149**	M4.5 x 0.75 x 11.5	–	**415543**	**215150**	5.0 Nm	T20
105	**215149**	M4.5 x 0.75 x 11.5	–	**415543**	**215150**	5.0 Nm	T20
111	**115531**	M3 x 0.5 x 7.5	–	**415514**	**115590**	1.2 Nm	T8
112	**115672 (<Ø37 mm)**	M3.5 x 0.6 x 7.5	–	**415510**	**115664**	3.0 Nm	T15
112	**115673 (>Ø36 mm)**	M3.5 x 0.6 x 9	–	**415510**	**115664**	3.0 Nm	T15
113	**215149**	M4.5 x 0.75 x 11.5	–	**415543**	**215150**	5.0 Nm	T20
114	**215149**	M4.5 x 0.75 x 11.5	–	**415543**	**215150**	5.0 Nm	T20
161	**115676**	M2.5 x 0.45 x 5	–	**415514**	**115590**	1.2 Nm	T8
163	**115673**	M3.5 x 0.6 x 9	–	**415510**	**115664**	3.0 Nm	T15
211	**215377**	M2 x 0.4 x 4	–	**415507**	**115537**	0.6 Nm	T6
262	**215987**	M2.5 x 0.45 x 6	–	**415514**	**115590**	1.2 Nm	T8
264	**115673**	M3.5 x 0.6 x 9	–	**415510**	**115664**	3.0 Nm	T15
304	**215392**	M5 x 0.8 x 12.9	–	**415543**	**215150**	5.0 Nm	T20
325	**315321**	M1.6 x 0.35 x 3	**315320**	**–**	**315322**	0.3 Nm	0.5x3
394	**215915**	M2.5 x 0.45 x 7	–	**415514**	**115590**	1.1 Nm	T8
395	**215985**	M3 x 0.5 x 7.5	–	**415514**	**115590**	1.2 Nm	T8
396	**415320**	M3.5 x 0.6 x 11	–	**415510**	**115664**	3.0 Nm	T15
397	**215149**	M4.5 x 0.75 x 11.5	–	**415543**	**215150**	5.0 Nm	T20

Insert Accessories

Countersunk Screws | Torque Drivers

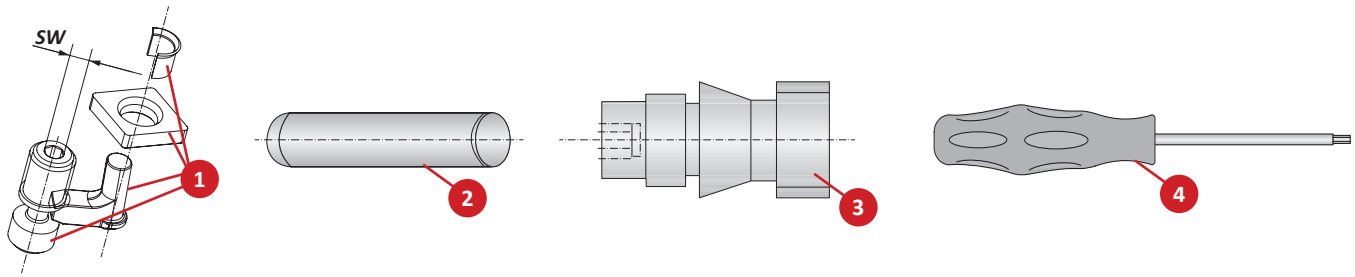

Insert Form	1. Clamping Set		2. Mounting Arbor for Sleeve	3. Clamping Bolt		4. Service Key	
	Part No.	Key Size	Part No.	Part No.	Key Size	Part No.	Key Size
75	**315004**	s3	**415642**	–	–	**415578**	s3
123	**315003**	s3	**415642**	**115775**	s2.5	**415578**	s3
						115575	s2.5
124	**315054**	s3	**415644**	**115776**	s3	**415578**	s3
						115630	s3

Technical Information

Surface Finish | General Formulas

The corner radius of replaceable inserts is very important in finish machining. Large corner radii 0.8 mm (0.031") or higher allow for high feed rates with good surface quality.

The expected surface quality can be estimated by using the function of corner radius and feed rate formula.

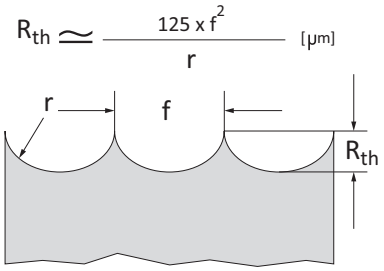

1. The larger the corner radius and the lighter the feed rate is, the better the surface quality.



2. If the feed is approximately 1/3 of the corner radius, the better the machining time and surface finish will be in finish machining applications.

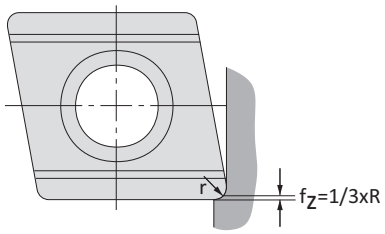

3. A larger corner radius increases radial forces, which can negatively affect dimensional accuracy. Large corner radii also require increased depth of cut.



Minimum depth of cut (a_p) should at least match the corner radius. This minimizes the radial forces.

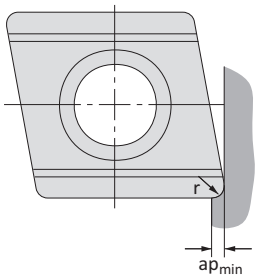

General Formulas		
Cutting Speed	$\frac{Vc = D \times \pi \times n}{1000}$	**(M/min)**
RPM	$\frac{n = Vc \times 1000}{D \times \pi}$	**(min^{-1})**
Feed Speed	$V_f = f \times n$	**(mm/min)**
	D = Machining Ø	**(mm)**
	f= Feed	**(mm/u)**
	V_c= Cutting Speed	**(M/min)**
	n = RPM	**(min^{-1})**

Technical Information

Wiper Geometries

Replaceable Inserts with Wiper Geometry	
Insert with conventional corner radius with feed (f)	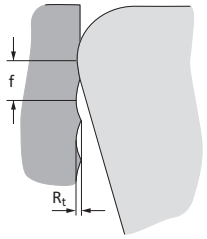
Insert with wiper geometry radius with same feed (f)	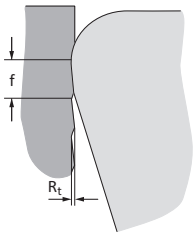
Insert with wiper geometry with increased feed (f)	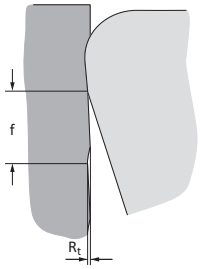

Wiper Geometry for 90° Approach Angle

Replaceable inserts produce a right-angled step at the bottom of the hole. When used in a Wohlhaupter standard insert holder that has a 90° approach angle, the secondary wiper cutting edge is nearly parallel with the wall of the hole.

Wiper geometry for 90° approach angle

Lw = length of the wiper secondary cutting edge

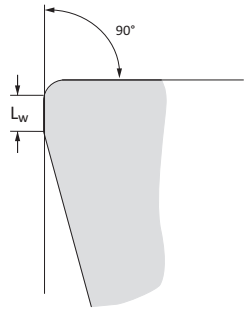

Wiper Geometry for 95° Approach Angle

Wiper inserts can also be used with 95° insert holders, which are included in the Wohlhaupter standard insert range.

Wiper geometry for 95° approach angle (left and right cutting)

Lw = length of the secondary wiper cutting edge

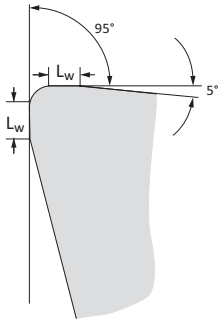

Recommended Cutting Data | Metric (mm)

ISO	Material	(BHN) Hardness	Grade	*Speed M / Min	Recommended Feed (mm / tooth) Nose Radii 0.1 mm	0.2 mm	0.4 mm	0.8 mm
P	**Free-Machining Steel** 1118, 1215, 12L14, etc.	100 - 250	Carbide	150 - 300	0.02 - 0.08	0.05 - 0.13	0.10 - 0.15	0.15 - 0.23
P	**Low-Carbon Steel** 1010, 1020, 1025, 1522, 1144, etc.	85 - 275	Carbide	145 - 280	0.02 - 0.05	0.05 - 0.10	0.08 - 0.13	0.13 - 0.20
P	**Medium-Carbon Steel** 1030, 1040, 1050, 1527, 1140, 1151, etc.	125 - 325	Carbide	145 - 280	0.02 - 0.05	0.05 - 0.10	0.08 - 0.13	0.13 - 0.20
P	**Alloy Steel** 4140, 5140, 8640, etc.	125 - 375	Carbide	120 - 215	0.02 - 0.05	0.05 - 0.10	0.08 - 0.13	0.13 - 0.20
P	**High-Strength Alloy** 4340, 4330V, 300M, etc.	225 - 400	Carbide	100 - 180	0.02 - 0.05	0.05 - 0.10	0.08 - 0.13	0.13 - 0.20
P	**Structural Steel** A36, A285, A516, etc.	100 - 350	Carbide	145 - 280	0.02 - 0.05	0.05 - 0.10	0.08 - 0.13	0.13 - 0.20
P	**Tool Steel** H-13, H-21, A-4, 0-2, S-3, etc.	150 - 250	Carbide	100 - 180	0.02 - 0.05	0.05 - 0.08	0.08 - 0.10	0.10 - 0.15
S	**High-Temp Alloy** Hastelloy B, Inconel 600, etc.	140 - 310	Carbide	30 - 70	0.02 - 0.05	0.05 - 0.08	0.08 - 0.13	0.10 - 0.15
S	**Titanium Alloy**	140 - 310	Carbide	40 - 90	0.02 - 0.05	0.05 - 0.08	0.08 - 0.13	0.10 - 0.15
S	**Aerospace Alloy** S82	185 - 350	Carbide	40 - 90	0.02 - 0.05	0.05 - 0.08	0.08 - 0.13	0.10 - 0.15
M	**Stainless Steel 400 Series** 416, 420, etc.	185 - 350	Carbide	90 - 160	0.02 - 0.05	0.05 - 0.10	0.08 - 0.10	0.10 - 0.15
M	**Stainless Steel 300 Series** 304, 316, 17-4PH, etc.	135 - 275	Carbide	90 - 160	0.02 - 0.05	0.05 - 0.10	0.08 - 0.10	0.10 - 0.15
M	**Super Duplex Stainless Steel**	135 - 275	Carbide	90 - 160	0.02 - 0.05	0.05 - 0.10	0.08 - 0.10	0.10 - 0.15

*Not to exceed max recommended RPM for boring head found in corresponding Wohlhaupter Operation Manual

Deep Hole Boring Speed Adjustment

⚠ For Dynamic Boring Tool Length				
Boring Type	**7xD**	**8xD**	**9xD**	**10xD**
Roughing	❖	❖	❖	❖
Finishing	0.70	0.50	0.30	❖

❖ Contact our Application Engineering department for assistance when boring these depths without NOVI^{TECH}.

Deep Hole Boring Speed Adjustment

⚠ For Dynamic Boring Tool NOVI^{TECH} Length			
Boring Type	**8xD**	**9xD**	**10xD**
Roughing	0.80	0.60	0.40
Finishing	0.90	0.70	0.50

*Not to exceed recommended RPM printed on NOVI^{TECH} module

Recommended Speed Example

If the recommended speed for a finish boring assembly under 5xD is 120 M/Min, then the speed for a 10xD finish boring assembly in the same application would be 60 M/Min (120 M/Min x 0.50 = 60 M/Min)

5xD = 120 M/Min	10xD = 60 M/Min

IMPORTANT: Max spindle speed refers to maximum possible speed for individual boring head and is not a recommended parameter. Factory technical assistance is available for your specific applications through our Application Engineering department. *email:* **engineering.eu@alliedmachine.com**

⚠ **WARNING** **Tool failure can cause serious injury. To prevent:**

-Do not exceed recommended 10xD length-to-diameter ratio or exceed 4 total components (including shank)
-When using Alu-Line components, do not exceed recommended 5xD length-to-diameter ratio
-When using tool steel components, do not exceed recommended 6xD length-to-diameter ratio
-When using heavy metal components, do not exceed recommended 8xD length-to-diameter ratio
-When using a carbide shank, do not exceed recommended 9xD length-to-diameter ratio
-When using a NOVI^{TECH} module, do not exceed recommended 10xD length-to-diameter ratio
Factory technical assistance is available for your specific applications through our Application Engineering department. *email:* **engineering.eu@alliedmachine.com**

Recommended Cutting Data | Metric (mm)

ISO	Material	(BHN) Hardness	Grade	*Speed M / Min	Recommended Feed (mm / tooth) Nose Radii 0.1 mm	0.2 mm	0.4 mm	0.8 mm
H	**Wear Plate** Hardox®, AR400, T-1, etc.	400 - 600	Carbide	30 - 60	0.02 - 0.05	0.05 - 0.08	0.08 - 0.10	0.10 - 0.15
			CBN	70 - 180	0.02 - 0.05	0.05 - 0.08	0.08 - 0.10	0.10 - 0.15
	Hardened Steel	300 - 500	Carbide	40 - 80	0.02 - 0.05	0.05 - 0.08	0.08 - 0.10	0.10 - 0.15
			CBN	70 - 180	0.02 - 0.05	0.05 - 0.08	0.08 - 0.10	0.10 - 0.15
K	**SG / Nodular Cast Iron**	120 - 320	Carbide	145 - 260	0.02 - 0.05	0.05 - 0.10	0.08 - 0.13	0.13 - 0.20
	Grey / White Iron	180 - 320	Carbide	180 - 320	0.02 - 0.05	0.05 - 0.10	0.08 - 0.13	0.13 - 0.20
			CBN	400 - 1000	0.02 - 0.05	0.05 - 0.10	0.08 - 0.13	0.13 - 0.20
N	**Cast Aluminium**	30 - 180	Carbide	260 - 850	0.02 - 0.05	0.05 - 0.10	0.08 - 0.13	0.13 - 0.20
			PCD	495 - 1995	0.02 - 0.05	0.05 - 0.10	0.08 - 0.13	0.13 - 0.20
	Wrought Aluminium	30 - 180	Carbide	205 - 600	0.02 - 0.05	0.05 - 0.13	0.10 - 0.15	0.15 - 0.23
	Aluminium Bronze	100 - 250	Carbide	145 - 280	0.02 - 0.05	0.05 - 0.10	0.10 - 0.13	0.13 - 0.20
	Brass	100	Carbide	205 - 600	0.02 - 0.05	0.05 - 0.10	0.08 - 0.13	0.13 - 0.20
	Copper	60	Carbide	100 - 180	0.02 - 0.05	0.05 - 0.08	0.08 - 0.10	0.10 - 0.13

*Not to exceed max recommended RPM for boring head found in corresponding Wohlhaupter Operation Manual

Deep Hole Boring Speed Adjustment

⚠ For Dynamic Boring Tool Length				
Boring Type	**7xD**	**8xD**	**9xD**	**10xD**
Roughing	❖	❖	❖	❖
Finishing	0.70	0.50	0.30	❖

❖ Contact our Application Engineering department for assistance when boring the depths without NOVI^{TECH}.

Deep Hole Boring Speed Adjustment

⚠ For Dynamic Boring Tool NOVI^{TECH} Length			
Boring Type	**8xD**	**9xD**	**10xD**
Roughing	0.80	0.60	0.40
Finishing	0.90	0.70	0.50

*Not to exceed recommended RPM printed on NOVI^{TECH} module

Recommended Speed Example

If the recommended speed for a finish boring assembly under 5xD is 120 M/Min, then the speed for a 10xD finish boring assembly in the same application would be 60 M/Min (120 M/Min x 0.50 = 60 M/Min)

5xD = 120 M/Min	10xD = 60 M/Min

IMPORTANT: Max spindle speed refers to maximum possible speed for individual boring head and is not a recommended parameter. Factory technical assistance is available for your specific applications through our Application Engineering department. *email:* **engineering.eu@alliedmachine.com**

⚠ **WARNING** **Tool failure can cause serious injury. To prevent:**

-Do not exceed recommended 10xD length-to-diameter ratio or exceed 4 total components (including shank)
-When using Alu-Line components, do not exceed recommended 5xD length-to-diameter ratio
-When using tool steel components, do not exceed recommended 6xD length-to-diameter ratio
-When using heavy metal components, do not exceed recommended 8xD length-to-diameter ratio
-When using a carbide shank, do not exceed recommended 9xD length-to-diameter ratio
-When using a NOVI^{TECH} module, do not exceed recommended 10xD length-to-diameter ratio
Factory technical assistance is available for your specific applications through our Application Engineering department. *email:* **engineering.eu@alliedmachine.com**

Boring Insert Wear Patterns

Built-up Edge

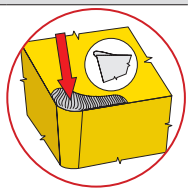

Potential Problem

- Machined material adheres to the cutting edge of insert
- When it breaks, the edge becomes brittle and cracks
- This can negatively affect machined surface

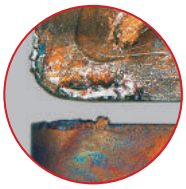

Possible Solution

- Increase temperature by increasing speed or feed
- Use an insert with higher lubricity coating
- Choose a freer cutting insert geometry

Flank Wear

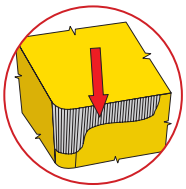

Potential Problem

- Caused by friction between the insert and machined material
- It cannot be fully eliminated, but it can be reduced

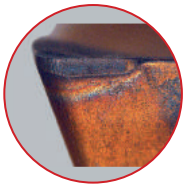

Possible Solution

- Use a more wear-resistant grade
- Reduce cutting speed
- Use coolant or increase coolant flow to the cutting edge

Cratering

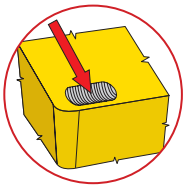

Potential Problem

- Appears when the geometry is too neutral or material is too hard for the substrate

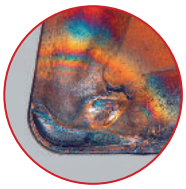

Possible Solution

- Use a more wear-resistant grade
- Reduce cutting speed or feed
- Use coolant or increase coolant flow to the cutting edge

Notch Wear

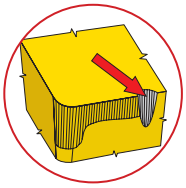

Potential Problem

- Occurs when cutting edge of insert comes in contact with surface of machined material
- Caused by hardening of surface layer of material and burrs
- Often appears on stainless austenitic steels and other high-temperature alloy steels

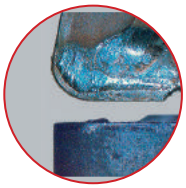

Possible Solution

- Use a more wear-resistant grade (Al_2O_3)
- Select a tool with a smaller approach angle
- Vary the radial depth of cut
- Use coolant or increase coolant flow to the cutting edge

Comb Cracks

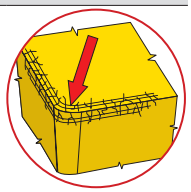

Potential Problem

- Caused by high stress on the cutting edge during interrupted cuts

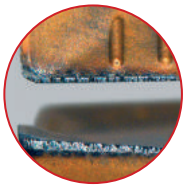

Possible Solution

- Switch off coolant or increase coolant flow to obtain an even temperature level
- Reduce cutting speed
- Use tougher insert grade

Plastic Deformation

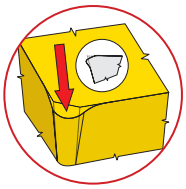

Potential Problem

- Caused by high thermal stress on the cutting edge from excessive feed rate and cutting speed

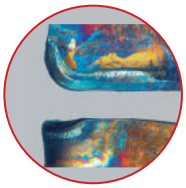

Possible Solution

- Use a more wear-resistant grade
- Reduce cutting speed
- Reduce feed rate
- Use coolant or increase coolant flow to the cutting edge

Chipping of Cutting Edge (Out of Cut)

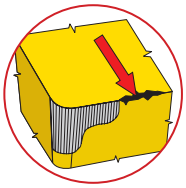

Potential Problem

- Caused by poor chip control
- Can damage the portion of the cutting edge that might not be engaged in the cut

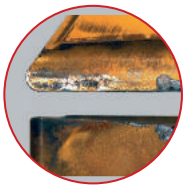

Possible Solution

- Change feed rate to gain chip control
- Select a tool with a different approach angle
- Use an insert with a different geometry
- Use a tougher grade of carbide

Insert Fracture

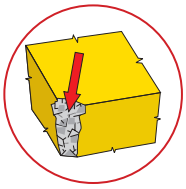

Potential Problem

- Caused by workpiece material, grade, condition, the rigidity of the machine-tool workpiece, extent of wear, and cutting conditions



Possible Solution

- Use a tougher grade of carbide
- Reduce the feed and depth of cut
- Use an insert with a stronger chip breaker
- Use an insert with a bigger corner radius

Notes

SECTION

B10-I

Modular Tool Holders

Wohlhaupter® Modular Tool Holders

Adapter Sleeves | Drill Chucks | Collet Chucks | Milling Arbors | Holding Arbors | Hydraulic Clamping Chucks
Tapping Chucks | Boring Bar Blanks



Clamping Tools with MVS Connection

Wohlhaupter offers a complete range of tool holders that incorporates the MVS connection. Our clamping tools allow for smaller MVS tools to connect and provide a quick and inexpensive alternative to special tooling. Many of the clamping tools also feature coolant-through capabilities.

Applicable Industries

Aerospace | Agriculture | Automotive | Firearms | General Machining | Oil & Gas | Renewable Energy

Your safety and the safety of others is very important. This catalogue contains important safety messages. Always read and follow all safety precautions.



This triangle is a safety hazard symbol. It alerts you to potential safety hazards that can cause tool failure and serious injury.

When you see this symbol in the catalogue, look for a related safety message that may be near this triangle or referred to in the nearby text.

There are safety signal words also used in the catalogue. Safety messages follow these words.

⚠ WARNING

WARNING (shown above) means that failure to follow the precautions in this message could result in tool failure and serious injury.

NOTICE means that failure to follow the precautions in this message could result in damage to the tool or machine but not result in personal injury.

NOTE and **IMPORTANT** are also used. These are important that you read and follow but are not safety-related.

Visit www.alliedmachine.com for the most up-to-date information and procedures.

Reference Icons
The following icons will appear throughout the catalogue to help you navigate between products.

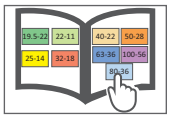

MVS Connection Colour Guide
Detailed instructions and information regarding the MVS connection(s)

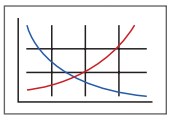

Recommended Cutting Data
Speed and feed recommendations for optimum and safe boring

Through Coolant Option
Indicates that the product is through coolant

Modular Tool Holders Table of Contents

Adapter Side Lock for Cylindrical Shanks 2

Drill Chucks 3

Collet Chucks 4

Milling Machine Arbors 5

Holding Arbors for Milling Cutters 6

Clamping and Tapping Chucks 7

Boring Bar Blanks 8

Accessories for Adapter Sleeves
Thread Pins and Ball Pressure Screws 9
Adapter Sleeves for Tap Shanks 10
Micro Clamping Chucks 11

Accessories for Drill Chucks 12

Collet Chucks for Erickson System 13

Accessories for Collet Chucks . . . . . 14 - 27

Collet Set Accessories 28

Accessories for Collet Chucks . . . . . 29 - 30

Sealing Disks for Collet Chucks . . . . . 31 - 32

Accessories for Milling Machine Arbors 33

Reducing Sleeves for Hydraulic Clamping Chucks 34

Quick Change Adapters . . . . . 35 - 38

Service Keys 39

Adapter Side Lock for Cylindrical Shanks DIN 1835B

Clamping Diameter Range: 6.00 mm - 40.00 mm



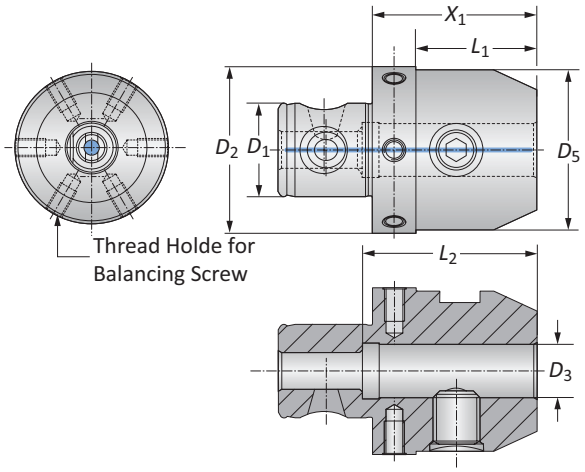

MVS Connection D_2 | D_1	Clamping Range D_3	Adapter Sleeve X_1	L_1	L_2	D_5	Weight	Balancing Screw	Part No.
32 - 18	6.00	36.00	23.00	40.00	25.00	0.20 (kg)	M5 x .8 x 6	**228022**
32 - 18	8.00	36.00	23.00	40.00	28.00	0.20 (kg)	M5 x .8 x 6	**228023**
32 - 18	10.00	48.00	–	44.00	35.00	0.30 (kg)	M5 x .8 x 6	**228024**
40 - 22	12.00	52.00	–	49.00	42.00	0.50 (kg)	M5 x .8 x 8	**228025**
40 - 22	14.00	54.00	–	49.00	44.00	0.60 (kg)	M5 x .8 x 8	**228026**
50 - 28	6.00	36.00	23.00	40.00	25.00	0.40 (kg)	M6 x 1 x 10	**162015**
50 - 28	8.00	36.00	23.00	40.00	28.00	0.40 (kg)	M6 x 1 x 10	**162016**
50 - 28	10.00	44.00	31.00	44.00	35.00	0.50 (kg)	M6 x 1 x 10	**162017**
50 - 28	12.00	44.00	31.00	49.00	42.00	0.50 (kg)	M6 x 1 x 10	**162018**
50 - 28	16.00	49.00	36.00	52.00	48.00	1.00 (kg)	M6 x 1 x 10	**162019**
50 - 28	18.00	49.00	36.00	52.00	48.00	1.00 (kg)	M6 x 1 x 10	**228014**
50 - 28	20.00	60.00	–	54.00	52.00	1.20 (kg)	M6 x 1 x 10	**162020**
63 - 36	20.00	49.00	36.00	54.00	52.00	1.10 (kg)	M6 x 1 x 10	**161024**
63 - 36	25.00	75.00	–	59.00	63.00	1.90 (kg)	M6 x 1 x 15	**161026**
63 - 36	32.00	75.00	–	63.00	72.00	2.20 (kg)	M6 x 1 x 15	**161027**
80 - 36	40.00	85.00	–	73.00	80.00	2.50 (kg)	M6 x 1 x 15	**161028**

NOTE: Balanced 10 gmm/kg

NOTE: When using a ball pressure screw instead of a thread pin, it's similar to DIN 1835E, without axial adjustment.
See ball pressure screws on page B10-I: 9.

B10-M: 12-13
Key on B10-I: 1

B10: VI-VII

(m) = Metric (mm)

Drill Chucks for Clockwise & Counterclockwise Rotation

Clamping Diameter Range: 0.50 mm - 16.00 mm



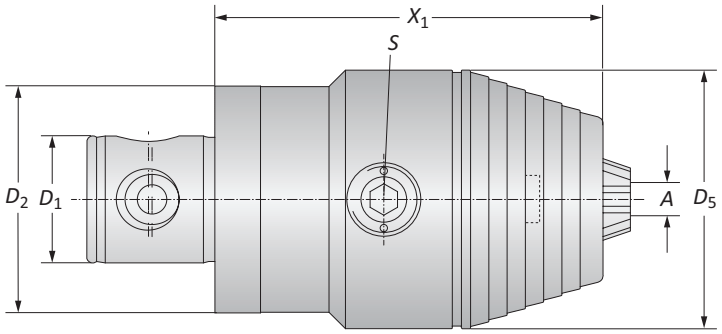

	MVS Connection $D_2 \mid D_1$	Clamping Range A	Drill Chuck X_1	D_5	S	Weight	Part No.
ⓜ	50 - 28	0.50 - 13.00	80.00	50.00	s6 / B	1.10 (kg)	**209088**
ⓜ	50 - 28	2.50 - 16.00	85.00	57.00	s6 / B	1.30 (kg)	**209089**
ⓜ	63 - 36	0.50 - 13.00	80.00	50.00	s6 / B	1.30 (kg)	**209090**
ⓜ	63 - 36	2.50 - 16.00	85.00	57.00	s6 / B	1.50 (kg)	**209091**

B10-M: 12-13

Key on B10-I: 1

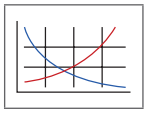

B10: VI-VII

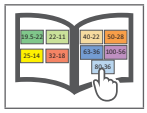

ⓜ = Metric (mm)

Collet Chucks ISO 10898 (DIN 6388) | ISO 15488 (DIN 6499)

Clamping Diameter Range: 2.00 mm - 32.00 mm



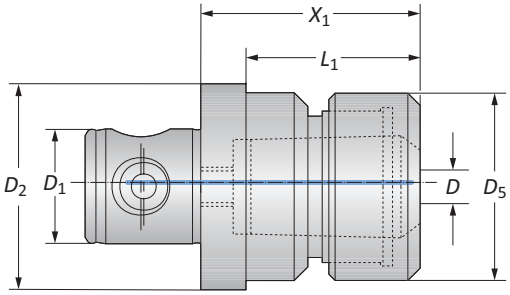

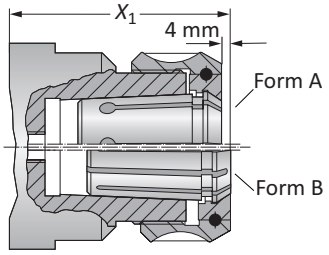

Collet Chucks ISO 10897 (DIN 6388) | Diameter Range: 2.00 mm - 32.00 mm

	MVS Connection $D_2 \mid D_1$	Clamping Range D	Nominal Size	Collet Chuck X_1*	Collet Chuck L_1	Collet Chuck D_5	Weight	Part No.
	40 - 22	2.00 - 16.00	16	64.00	–	43.00	0.50 (kg)	**209082**
	50 - 28	2.00 - 16.00	16	63.00	50.00	43.00	0.90 (kg)	**162011**
m	50 - 28	2.00 - 25.00	25	74.00	–	60.00	1.00 (kg)	**209083**
	63 - 36	2.00 - 25.00	25	74.00	–	60.00	1.40 (kg)	**161016**
	63 - 36	4.00 - 32.00	32	89.00	–	72.00	1.80 (kg)	**161098**

***X_1** Clamping nut with ball-bearing



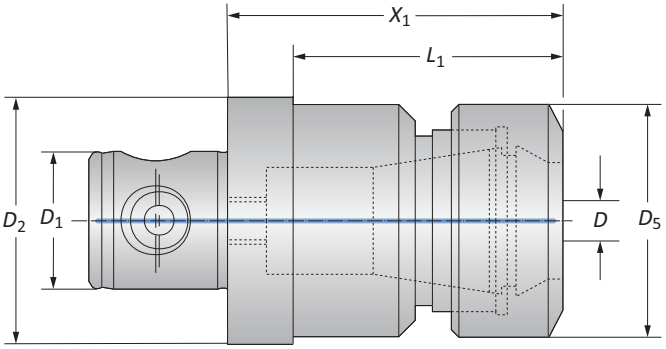

Collet Chucks ISO 15488 (DIN 6499) | Diameter Range: 1.00 mm - 26.00 mm

	MVS Connection $D_2 \mid D_1$	Clamping Range D	Nominal Size	Collet Chuck X_1*	Collet Chuck L_1	Collet Chuck D_5	Weight	Part No.
	32 - 18	1.00 - 10.00	ER 16	54.00	4100	28.00	0.20 (kg)	**228020**
	40 - 22	2.00 - 16.00	ER 25	75.00	–	42.00	0.60 (kg)	**228021**
m	50 - 28	2.00 - 16.00	ER 25	75.00	62.00	42.00	0.80 (kg)	**228003**
	50 - 28	2.00 - 20.00	ER 32	76.00	–	50.00	0.80 (kg)	**228004**
	63 - 36	2.00 - 20.00	ER 32	76.00	63.00	50.00	1.20 (kg)	**228007**
	63 - 36	4.00 - 26.00	ER 40	88.00	–	63.00	1.20 (kg)	**228006**

***X_1** Clamping nut with sliding ring

B10-M: 12-13
Key on B10-I: 1
B10: VI-VII

m = Metric (mm)

Milling Machine Arbors

For Milling Cutters with Longitudinal or Transverse Drive | Shell Mill Adapter Range: 13.00 mm - 40.00 mm



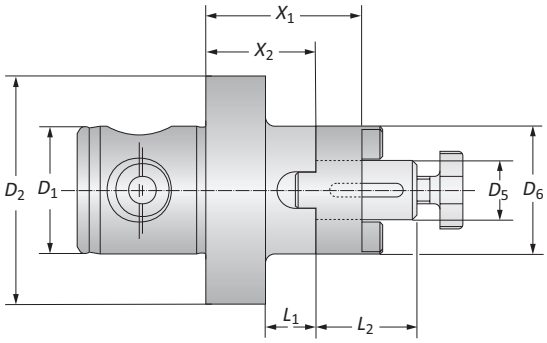

	MVS Connection $D_2 \mid D_1$	Adapter Range D_5	Milling Arbor X_1	X_2	L_1	L_2	D_6	Weight	Part No.
	50 - 28	13.00	34.00	24.00	11.00	22.00	28.00	0.40 (kg)	**162002**
	50 - 28	16.00	40.00	30.00	17.00	27.00	32.00	0.50 (kg)	**162003**
	50 - 28	22.00	40.00	28.00	15.00	31.00	40.00	0.60 (kg)	**162004**
ⓜ	63 - 36	16.00	40.00	30.00	17.00	27.00	32.00	0.80 (kg)	**161002**
	63 - 36	22.00	40.00	28.00	15.00	31.00	40.00	0.90 (kg)	**161003**
	63 - 36	27.00	40.00	28.00	15.00	33.00	48.00	1.10 (kg)	**161004**
	63 - 36	32.00	40.00	26.00	13.00	38.00	58.00	1.30 (kg)	**161005**
	80 - 36	40.00	53.00	39.00	–	41.00	70.00*	2.60 (kg)	**161006**

*Ø 70.00 mm with clutch drive ring

B10-M: 12-13

Key on B10-I: 1

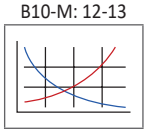

B10: VI-VII

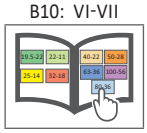

ⓜ = Metric (mm)

Holding Arbors for Milling Cutters

Central Coolant Feed | Shell Mill Adapter Range: 16.00 mm - 40.00 mm



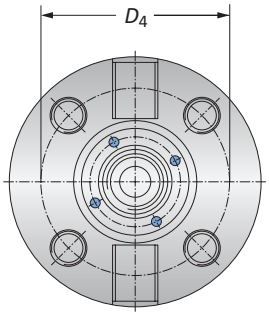

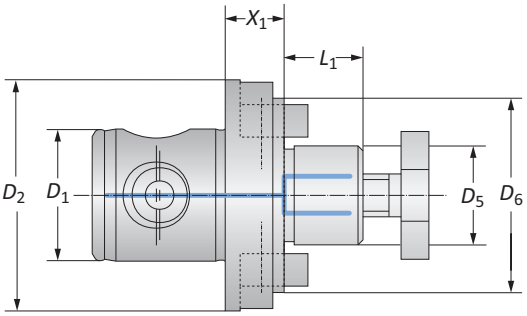

	MVS Connection $D_2 \mid D_1$	Adapter Range D_5	Holding Arbor X_1	L_1	D_4	D_6	Weight	Part No.
	50 - 28	16.00	16.00	17.00	–	40.00	0.40 (kg)	**162032**
	50 - 28	22.00	16.00	19.00	–	50.00	0.50 (kg)	**162033**
m	63 - 36	27.00	16.00	21.00	–	60.00	0.80 (kg)	**161082**
	80 - 36	32.00	16.00	24.00	–	78.00	1.10 (kg)	**209080**
	80 - 36	40.00	19.00	27.00	66.70	89.00	1.50 (kg)	**209081**

NOTE: See page B10-G: 15 for holding arbor with MVS 100 - 56 connection

B10-M: 12-13
Key on B10-I: 1

B10: VI-VII

m = Metric (mm)

www.alliedmachine.com | +44 (0) 1384 400 900 | enquiries.eu@alliedmachine.com

Clamping Chucks | Tapping Chucks

Clamping Range: 20.00 mm



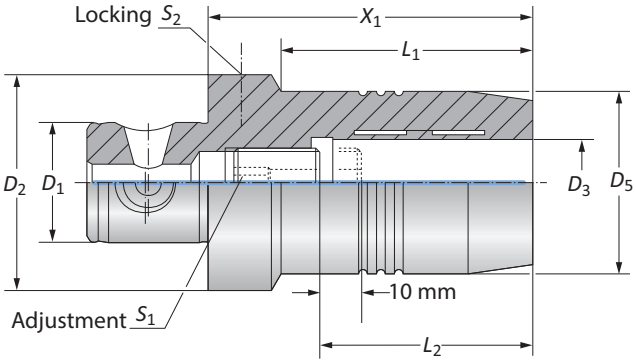

Though Coolant Hydraulic Clamping Chucks

	MVS Connection	Clamping Range	Clamping Chucks							
	D_2 | D_1	D_3	X_1	D_5	L_1	L_2	S_1	S_2	Weight	Part No.
ⓜ	50 - 28	20.00	75.00	42.00	58.00	51.00	s6	s5	0.80 (kg)	**209044**
	63 - 36	20.00	75.00	42.00	53.00	51.00	s5	s5	1.10 (kg)	**209045**

Note: Balanced corresponds to a specific residual imbalance of ≤ 10 gmm/kg.



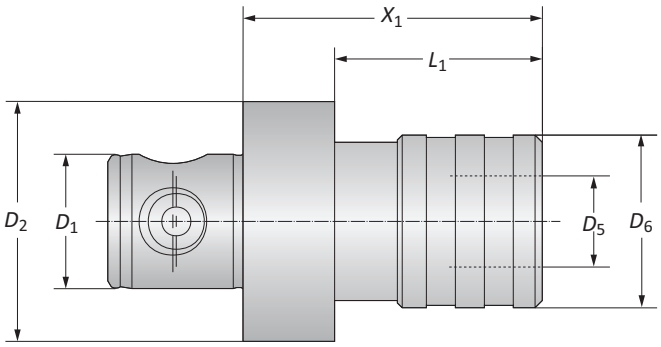

Tapping Chucks (Non-Coolant)

	MVS Connection	Quick Change Adapters		Tapping Chucks				Length Compensation			
	D_2 | D_1	For Taps	Nominal Size	X_1	L_1	D_5	D_6	Pressure	Tension	Weight	Part No.
	50 - 28	M 3 - M 12	1	62.00	49.00	19.00	41.50	7.50	7.50	0.70 (kg)	**209098**
	50 - 28	M 6 - M 20	2	94.00	–	31.00	60.30	10.00	10.00	1.10 (kg)	**209099**
ⓜ	63 - 36	M 3 - M 12	1	56.00	43.00	19.00	41.50	7.50	7.50	0.80 (kg)	**231005**
	63 - 36	M 6 - M 20	2	80.00	67.00	31.00	60.30	10.00	10.00	1.30 (kg)	**231006**
	63 - 36	M 14 - M 33	3	152.00	–	48.00	86.00	17.50	17.50	4.10 (kg)	**231007**

B10-M: 12-13

Key on B10-I: 1

B10: VI-VII

ⓜ = Metric (mm)

Boring Bar Blanks

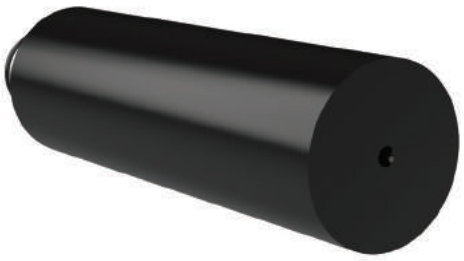

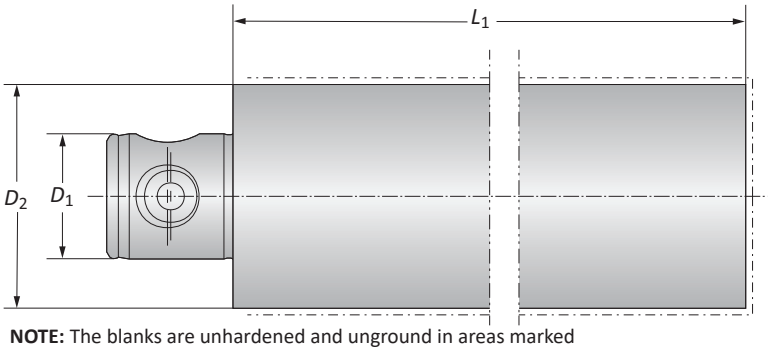

NOTE: The blanks are unhardened and unground in areas marked

MVS Connection D_2 | D_1	Boring Bar Blanks L_1	Weight	Part No.
50 - 28	160.00	2.60 (kg)	**166103**
63 - 36	160.00	4.20 (kg)	**166104**
80 - 36	160.00	6.60 (kg)	**166105**

B10-M: 12-13

Key on B10-I: 1

B10: VI-VII

m = Metric (mm)

Accessories for Adapter Sleeves

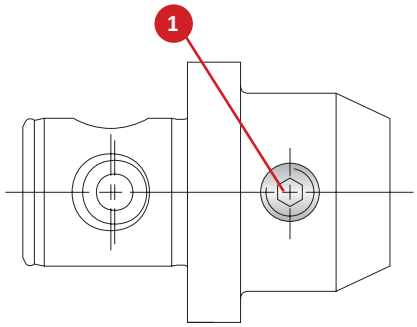

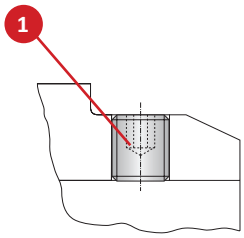

DIN 1835B

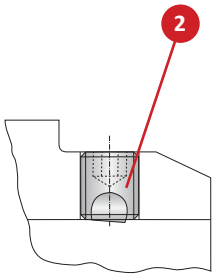

Similar to DIN 1835E*

	Clamping Diameter	1 Thread Pin		2 Ball Pressure Screw		
		Part No.	Service Key	Part No.	Service Key	Thread
	6.00	**115680**	s3 / B	**315788**	s3 / B	M6 x 1
	8.00	**115681**	s4 / B	**315789**	s4 / B	M8 x 1.25
	10.00	**115682**	s5 / B	**515535**	s5 / B	M10 x 1.5
	12.00	**115683**	s6 / B	**315790**	s6 / B	M12 x 1.75
	14.00	**115683**	s6 / B	**315790**	s6 / B	M12 x 1.75
ⓜ	16.00	**115684**	s6 / B	**515675**	s6 / B	M14 x 2
	18.00	**115684**	s6 / B	**515675**	s6 / B	M14 x 2
	20.00	**115685**	s8 / B	**515676**	s8 / B	M16 x 2
	25.00	**115686**	s10 / B	**515677**	s10 / B	M18 x 2 (2x)
	32.00	**115687**	s10 / B	**515678**	s10 / B	M20 x 2 (2x)
	40.00	**115687**	s10 / B	**515678**	s10 / B	M20 x 2 (2x)

*Without axial adjustment.

B10-M: 12-13

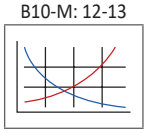

Key on B10-I: 1

B10: VI-VII

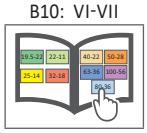

ⓜ = Metric (mm)

Accessories for Adapter Sleeves

Adapter Sleeve for Tap Shanks Suitable for Reduction Sleeves with Shanks to DIN 1835-B



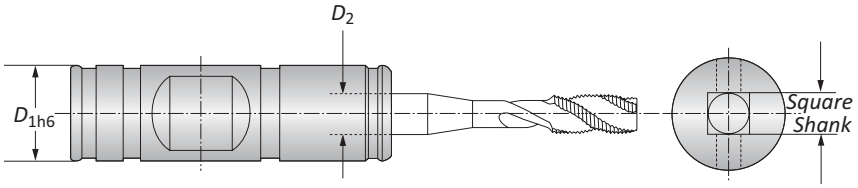

	Adapter Sleeves		
	D_{1h6}	D_2 x Square Shank	Part No.
	8.00	2.10 x 2.50	**271190**
	8.00	2.10 x 2.80	**271191**
	10.00	2.70 x 3.50	**271192**
	10.00	3.00 x 4.00	**271193**
	10.00	3.40 x 4.50	**271194**
	12.00	4.90 x 6.00	**271195**
	14.00	5.50 x 7.00	**271196**
	14.00	6.20 x 8.00	**271197**
	16.00	7.00 x 9.00	**271198**
	16.00	8.00 x 10.00	**271199**
m	18.00	9.00 x 11.00	**271200**
	20.00	9.00 x 12.00	**271201**
	25.00	11.00 x 14.00	**271202**
	25.00	12.00 x 16.00	**271203**
	32.00	14.50 x 18.00	**271204**
	32.00	16.00 x 20.00	**271205**
	32.00	18.00 x 22.00	**271206**
	40.00	20.00 x 25.00	**271207**
	40.00	22.00 x 28.00	**271208**
	50.00	24.00 x 32.00	**271209**
	50.00	29.00 x 36.00	**271210**
	50.00	32.00 x 40.00	**271211**

B10-M: 12-13
Key on B10-I: 1
B10: VI-VII

m = Metric (mm)

Accessories for Adapter Sleeves

Adapter Sleeve for Tap Shanks Suitable for Reduction Sleeves with Shanks to DIN 1835-B



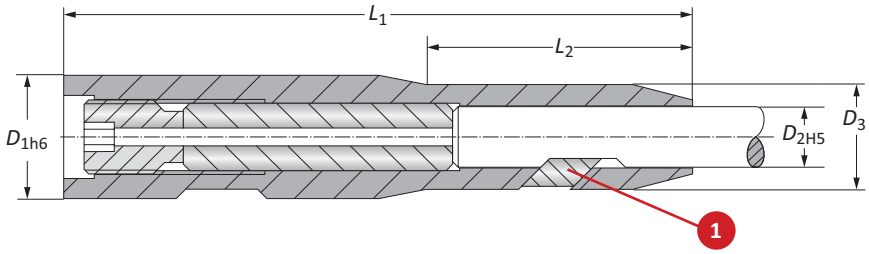

	Micro Clamping Chucks					1 Clamping Wedge	
	D_{1h6}	D_{2H5}	D_3	L_1	L_2	Part No.	Part No.
	16.00	6.00	12.00	100.00	40.00	**219170**	**219070**
	16.00	8.00	14.00	100.00	45.00	**219171**	**219071**
	20.00	10.00	17.00	100.00	43.00	**219172**	**219072**
Ⓜ	25.00	12.00	20.00	110.00	39.00	**219173**	**219073**
	25.00	14.00	22.00	110.00	46.00	**219174**	**219074**
	32.00	16.00	25.00	125.00	45.00	**219174**	**219075**
	32.00	18.00	27.00	130.00	54.00	**219174**	**219076**
	32.00	20.00	30.00	130.00	62.00	**219175**	**219077**

NOTE: Clamping chucks are used in reduction sleeves for clamping tools with cylindrical shanks to DIN 1835-B (Fig. 1). The chucks' design allows the use of standard tools versus ordering special tools (Fig. 2).

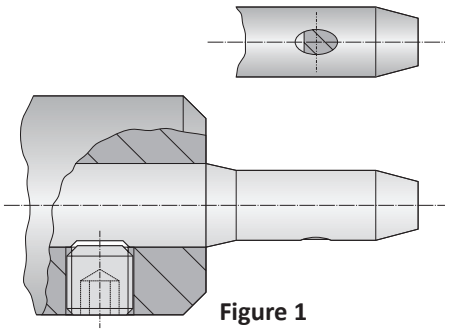

Figure 1

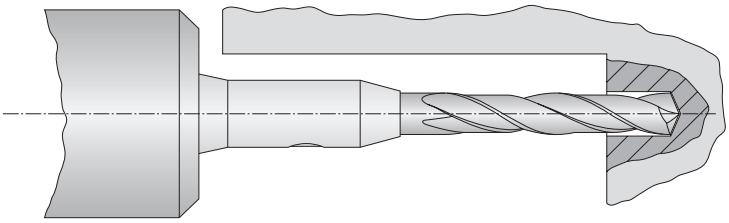

Figure 2

B10-M: 12-13
B10: VI-VII
Key on B10-I: 1

Ⓜ = Metric (mm)

Accessories for Drill Chucks

Service Keys | Gaskets | Assembly Tool

Service Keys for Drill Chucks

Service Key		Tightening Torque Nm	Part No.
Service Key	Type		
2.50	B	15	**415577**
6.00	B	15	**115578**

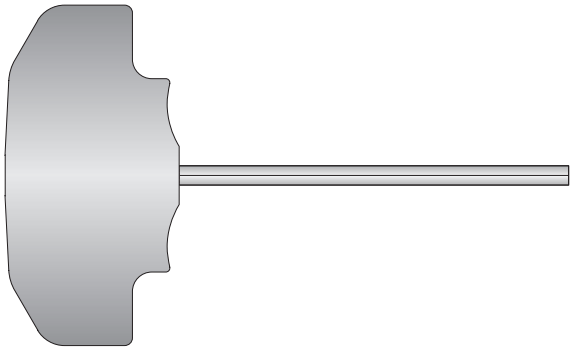

Gaskets for Drill Chucks

	Gasket		
	Gasket Diameter	Clamping Diameter	Part No.
ⓜ	3.00 - 6.00	0.50 - 13.00	**387113**
ⓜ	6.00 - 13.00	0.50 - 13.00	**387114**
ⓜ	3.00 - 6.00	2.50 - 16.00	**387115**
ⓜ	6.00 - 16.00	2.50 - 16.00	**387116**

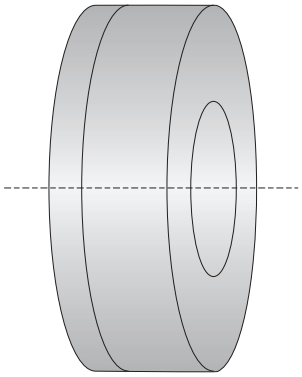

Assembly Tool for Gasket

Part No.
387112



B10-M: 12-13
Key on B10-I: 1

B10: VI-VII

ⓜ = Metric (mm)

Collet Chucks for Erickson System | Cylindrical Collet Chucks for ISO 15488 (DIN 6499) Collets

Diameter Range: 1.00 mm - 10.00 mm



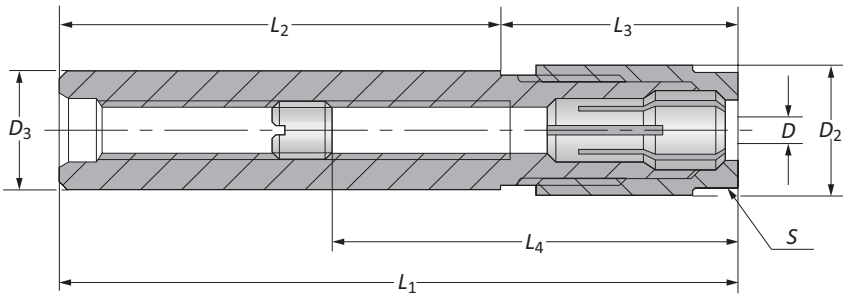

Collet Chucks for Erickson System

	Nominal Size	Clamping Range	Collet Chuck							Service Key	Weight	Part No.
		D	D_2	D_3	L_1	L_2	L_3	$L_{4\,Min}$	$L_{4\,Max}$	*S*		
ⓜ	6	1.00 - 6.50	14.00	12.50	112.00	76.00	36.00	42.00	101.00	13	0.20 (kg)	**162080**
ⓜ	6	1.00 - 6.50	14.00	12.50	176.00	140.00	36.00	42.00	102.00	13	0.20 (kg)	**162081**
ⓜ	10	1.00 - 10.00	21.00	20.00	120.00	76.00	44.00	39.00	107.00	19	0.30 (kg)	**162082**
ⓜ	10	1.00 - 10.00	21.00	20.00	184.00	140.00	44.00	39.00	119.00	19	0.30 (kg)	**162083**



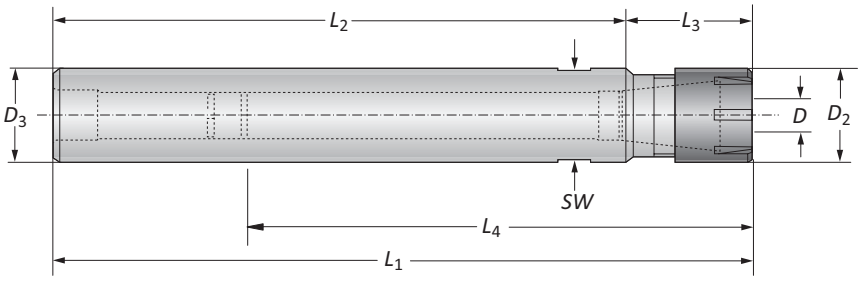

Cylindrical Collet Chucks for ISO 15488 (DIN 6499) Collets

	Nominal Size	Collet Chuck								Hex Size	Part No.
		D	D_2	D_3	L_1	L_2	L_3	$L_{4\,Min}$	$L_{4\,Max}$	*SW*	
ⓜ	ER 8	1.00 - 5.00	12.00	8.00	126.00	100.00	26.00	36.50	36.50	09	**209054**
ⓜ	ER 8	1.00 - 5.00	12.00	12.00	166.00	140.00	26.00	36.50	36.50	09	**209055**
ⓜ	ER 11	1.00 - 7.00	16.00	16.00	106.50	80.00	26.50	23.00	65.00	11	**209056**
ⓜ	ER 11	1.00 - 7.00	16.00	16.00	166.50	140.00	26.50	23.00	65.00	11	**209057**
ⓜ	ER 16	1.00 - 10.00	22.00	20.00	118.50	80.00	38.50	33.00	102.00	17	**209058**
ⓜ	ER 16	1.00 - 10.00	22.00	20.00	178.50	140.00	38.50	33.00	123.00	17	**209059**

B10-M: 12-13

Key on B10-I: 1

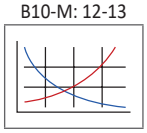

B10: VI-VII

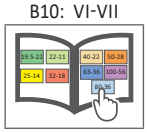

ⓜ = Metric (mm)

Accessories for Collet Chucks

Diameter Range: 0.50 mm - 10.00 mm



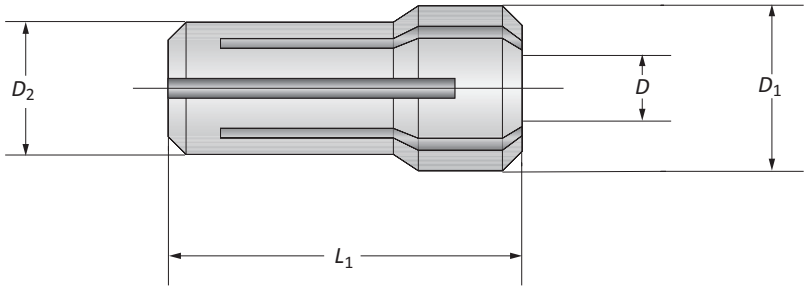

Collet Sets for Erickson System

	Nominal Size	Standard-No.	Set D_1	Set D_2	Set L_1	Set D	Part No.
m	6	416 E	9.50	7.62	25.50	0.50 - 6.00	**071016**
	10	417 E	13.50	11.43	30.40	0.50 - 10.00	**071017**

Collets for Erickson System

	Collet Nominal Size	Diameter Range D	Part No.
	6	0.50 - 1.00	**071355**
	6	1.00 - 1.50	**071356**
	6	1.50 - 2.00	**071357**
	6	2.00 - 2.50	**071358**
	6	2.50 - 3.00	**071359**
	6	3.00 - 3.50	**071360**
	6	3.50 - 4.00	**071361**
	6	4.00 - 4.50	**071362**
	6	4.50 - 5.00	**071363**
	6	5.00 - 5.50	**071364**
	6	5.50 - 6.00	**071365**
	10	0.50 - 1.00	**071368**
	10	1.00 - 1.50	**071369**
	10	1.50 - 2.00	**071370**
m	10	2.00 - 2.50	**071371**
	10	2.50 - 3.00	**071372**
	10	3.00 - 3.50	**071373**
	10	3.50 - 4.00	**071374**
	10	4.00 - 4.50	**071375**
	10	4.50 - 5.00	**071376**
	10	5.00 - 5.50	**071377**
	10	5.50 - 6.00	**071378**
	10	6.00 - 6.50	**071379**
	10	6.50 - 7.00	**071380**
	10	7.00 - 7.50	**071381**
	10	7.50 - 8.00	**071382**
	10	8.00 - 8.50	**071383**
	10	8.50 - 9.00	**071384**
	10	9.00 - 9.50	**071385**
	10	9.50 - 10.00	**071681**

B10-M: 12-13
Key on B10-I: 1
B10: VI-VII

m = Metric (mm)

Accessories for Collet Chucks

ISO 10897-A (DIN 6388-A)



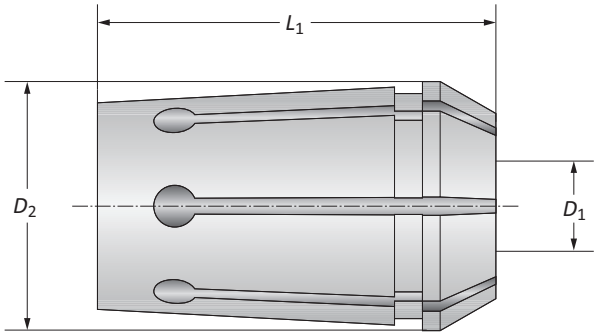

Collet Sets

	Nominal Size	Standard-No.	Set D_2	Set L_1	Set D_1	Part No.
ⓜ	A 16	410 E	22.65	40.00	2.00 - 16.00	**071003**
ⓜ	A 25	444 E	32.90	52.00	2.00 - 25.00	**071004**
ⓜ	A 32	450 E	41.30	60.00	4.00 - 32.00	**071019**

Collets

	Nominal Size	Diameter D_1	Part No.
	A 16	2.00	**071140**
	A 16	2.50	**071141**
	A 16	3.00	**071142**
	A 16	3.50	**071143**
	A 16	4.00	**071144**
	A 16	4.50	**071145**
	A 16	5.00	**071146**
	A 16	5.50	**071147**
	A 16	6.00	**071148**
	A 16	6.50	**071149**
	A 16	7.00	**071150**
	A 16	7.50	**071151**
	A 16	8.00	**071152**
	A 16	8.50	**071153**
ⓜ	A 16	9.00	**071154**
	A 16	9.50	**071155**
	A 16	10.00	**071156**
	A 16	10.50	**071157**
	A 16	11.00	**071158**
	A 16	11.50	**071159**
	A 16	12.00	**071160**
	A 16	12.50	**071161**
	A 16	13.00	**071162**
	A 16	13.50	**071163**
	A 16	14.00	**071164**
	A 16	14.50	**071165**
	A 16	15.00	**071166**
	A 16	15.50	**071167**
	A 16	16.00	**071168**

B10-M: 12-13
Key on B10-I: 1
B10: VI-VII

ⓜ = Metric (mm)

Accessories for Collet Chucks

ISO 10897-A (DIN 6388-A)

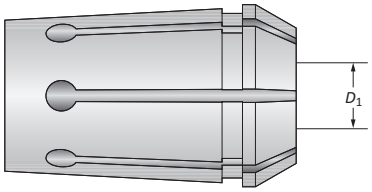

Collets

	Nominal Size	Diameter D_1	Part No.
	A 25	2.00	**071169**
	A 25	3.00	**071170**
	A 25	4.00	**071171**
	A 25	5.00	**071172**
	A 25	6.00	**071173**
	A 25	7.00	**071174**
	A 25	8.00	**071175**
	A 25	9.00	**071176**
	A 25	10.00	**071177**
	A 25	11.00	**071178**
	A 25	12.00	**071179**
	A 25	13.00	**071180**
	A 25	14.00	**071181**
	A 25	15.00	**071182**
	A 25	16.00	**071183**
	A 25	17.00	**071184**
	A 25	18.00	**071185**
	A 25	19.00	**071186**
	A 25	20.00	**071187**
	A 25	21.00	**071188**
	A 25	22.00	**071189**
	A 25	23.00	**071190**
	A 25	24.00	**071191**
	A 25	25.00	**071192**
	A 32	4.00	**071612**
	A 32	5.00	**071419**
(m)	A 32	6.00	**071420**
	A 32	7.00	**071613**
	A 32	8.00	**071421**
	A 32	9.00	**071614**
	A 32	10.00	**071422**
	A 32	11.00	**071666**
	A 32	12.00	**071423**
	A 32	13.00	**071667**
	A 32	14.00	**071668**
	A 32	15.00	**071669**
	A 32	16.00	**071424**
	A 32	17.00	**071670**
	A 32	18.00	**071665**
	A 32	19.00	**071671**
	A 32	20.00	**071416**
	A 32	21.00	**071672**
	A 32	22.00	**071673**
	A 32	23.00	**071674**
	A 32	24.00	**071675**
	A 32	25.00	**071417**
	A 32	26.00	**071676**
	A 32	27.00	**071677**
	A 32	28.00	**071678**
	A 32	29.00	**071679**
	A 32	30.00	**071633**
	A 32	31.00	**071680**
	A 32	32.00	**071418**

Accessories for Collet Chucks

ISO 10897-B (DIN 6388-B)



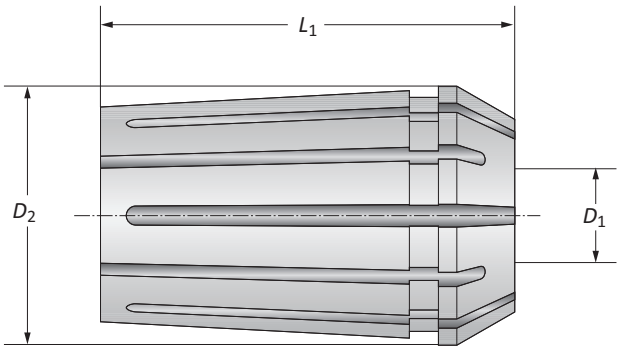

Collet Sets

	Nominal Size	Standard-No.	Set D_2	Set L_1	Set D_1	Part No.
ⓜ	B 16	415 E	22.65	40.00	1.50 - 16.00	**071005**
ⓜ	B 25	462 E	32.90	52.00	3.50 - 25.00	**071006**
ⓜ	B 32	467 E	41.30	60.00	5.50 - 32.00	**071022**

Collets

	Nominal Size	Diameter D_1	Part No.
	B 16	1.50 - 2.00	**071625**
	B 16	2.00 - 2.50	**071626**
	B 16	2.50 - 3.00	**071621**
	B 16	3.00 - 3.50	**071622**
	B 16	3.50 - 4.00	**071193**
	B 16	4.00 - 4.50	**071194**
	B 16	4.50 - 5.00	**071195**
	B 16	5.00 - 5.50	**071196**
	B 16	5.50 - 6.00	**071197**
	B 16	6.00 - 6.50	**071198**
	B 16	6.50 - 7.00	**071199**
	B 16	7.00 - 7.50	**071200**
	B 16	7.50 - 8.00	**071201**
	B 16	8.00 - 8.50	**071202**
ⓜ	B 16	8.50 - 9.00	**071203**
	B 16	9.00 - 9.50	**071204**
	B 16	9.50 - 10.00	**071205**
	B 16	10.00 - 10.50	**071206**
	B 16	10.50 - 11.00	**071207**
	B 16	11.00 - 11.50	**071208**
	B 16	11.50 - 12.00	**071209**
	B 16	12.00 - 12.50	**071210**
	B 16	12.50 - 13.00	**071211**
	B 16	13.00 - 13.50	**071212**
	B 16	13.50 - 14.00	**071213**
	B 16	14.00 - 14.50	**071214**
	B 16	14.50 - 15.00	**071215**
	B 16	15.00 - 15.50	**071216**
	B 16	15.50 - 16.00	**071217**

B10-M: 12-13
Key on B10-I: 1
B10: VI-VII

Accessories for Collet Chucks

ISO 10897-B (DIN 6388-B)



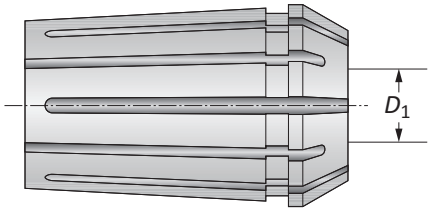

Collets

	Nominal Size	Diameter D_1	Part No.
	B 25	3.50 - 4.00	**071627**
	B 25	4.00 - 4.50	**071628**
	B 25	4.50 - 5.00	**071218**
	B 25	5.00 - 5.50	**071219**
	B 25	5.50 - 6.00	**071220**
	B 25	6.00 - 6.50	**071221**
	B 25	6.50 - 7.00	**071222**
	B 25	7.00 - 7.50	**071223**
	B 25	7.50 - 8.00	**071224**
	B 25	8.00 - 8.50	**071225**
	B 25	8.50 - 9.00	**071226**
	B 25	9.00 - 9.50	**071227**
	B 25	9.50 - 10.00	**071228**
	B 25	10.00 - 10.50	**071229**
	B 25	10.50 - 11.00	**071230**
	B 25	11.00 - 11.50	**071231**
	B 25	11.50 - 12.00	**071232**
	B 25	12.00 - 12.50	**071233**
	B 25	12.50 - 13.00	**071234**
	B 25	13.00 - 13.50	**071235**
	B 25	13.50 - 14.00	**071236**
m	B 25	14.00 - 14.50	**071237**
	B 25	14.50 - 15.00	**071238**
	B 25	15.00 - 15.50	**071239**
	B 25	15.50 - 16.00	**071240**
	B 25	16.00 - 16.50	**071241**
	B 25	16.50 - 17.00	**071242**
	B 25	17.00 - 17.50	**071243**
	B 25	17.50 - 18.00	**071244**
	B 25	18.00 - 18.50	**071245**
	B 25	18.50 - 19.00	**071246**
	B 25	19.00 - 19.50	**071247**
	B 25	19.50 - 20.00	**071248**
	B 25	20.00 - 20.50	**071249**
	B 25	20.50 - 21.00	**071250**
	B 25	21.00 - 21.50	**071251**
	B 25	21.50 - 22.00	**071252**
	B 25	22.00 - 22.50	**071253**
	B 25	22.50 - 23.00	**071254**
	B 25	23.00 - 23.50	**071255**
	B 25	23.50 - 24.00	**071256**
	B 25	24.00 - 24.50	**071257**
	B 25	24.50 - 25.00	**071258**

B10-M: 12-13

Key on B10-I: 1

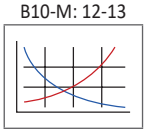

B10: VI-VII

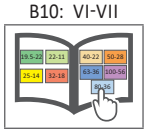

m = Metric (mm)

Accessories for Collet Chucks

ISO 10897-B (DIN 6388-B)



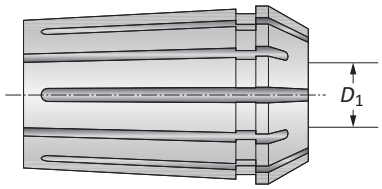

Collets

	Nominal Size	Diameter D_1	Part No.
	B 32	5.50 - 6.00	**071686**
	B 32	6.00 - 6.50	**071687**
	B 32	6.50 - 7.00	**071688**
	B 32	7.00 - 7.50	**071689**
	B 32	7.50 - 8.00	**071690**
	B 32	8.00 - 8.50	**071691**
	B 32	8.50 - 9.00	**071692**
	B 32	9.00 - 9.50	**071693**
	B 32	9.50 - 10.00	**071542**
	B 32	10.00 - 10.50	**071543**
	B 32	10.50 - 11.00	**071544**
	B 32	11.00 - 11.50	**071545**
	B 32	11.50 - 12.00	**071546**
	B 32	12.00 - 12.50	**071547**
	B 32	12.50 - 13.00	**071548**
	B 32	13.00 - 13.50	**071549**
	B 32	13.50 - 14.00	**071550**
	B 32	14.00 - 14.50	**071551**
	B 32	14.50 - 15.00	**071552**
	B 32	15.00 - 15.50	**071553**
	B 32	15.50 - 16.00	**071554**
	B 32	16.00 - 16.50	**071555**
	B 32	16.50 - 17.00	**071556**
	B 32	17.00 - 17.50	**071557**
	B 32	17.50 - 18.00	**071558**
	B 32	18.00 - 18.50	**071559**
(m)	B 32	18.50 - 19.00	**071560**
	B 32	19.00 - 19.50	**071561**
	B 32	19.50 - 20.00	**071562**
	B 32	20.00 - 20.50	**071563**
	B 32	20.50 - 21.00	**071564**
	B 32	21.00 - 21.50	**071565**
	B 32	21.50 - 22.00	**071566**
	B 32	22.00 - 22.50	**071567**
	B 32	22.50 - 23.00	**071568**
	B 32	23.00 - 23.50	**071569**
	B 32	23.50 - 24.00	**071570**
	B 32	24.00 - 24.50	**071571**
	B 32	24.50 - 25.00	**071572**
	B 32	25.00 - 25.50	**071573**
	B 32	25.50 - 26.00	**071574**
	B 32	26.00 - 26.50	**071575**
	B 32	26.50 - 27.00	**071576**
	B 32	27.00 - 27.50	**071577**
	B 32	27.50 - 28.00	**071578**
	B 32	28.00 - 28.50	**071579**
	B 32	28.50 - 29.00	**071580**
	B 32	29.00 - 29.50	**071581**
	B 32	29.50 - 30.00	**071582**
	B 32	30.00 - 30.50	**071583**
	B 32	30.50 - 31.00	**071584**
	B 32	31.00 - 31.50	**071585**
	B 32	31.50 - 32.00	**071586**

Accessories for Collet Chucks

ISO 10897-A (DIN 6388-A)



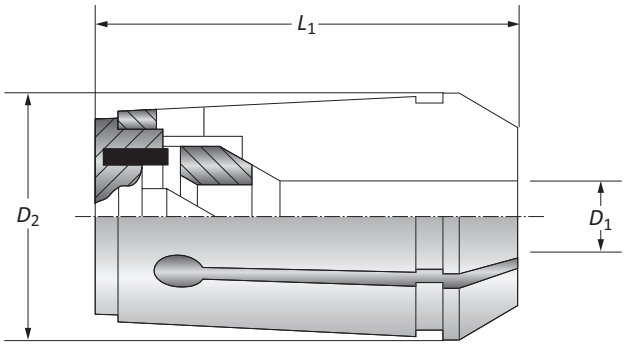

Collet Sets for Clarkson System

	Nominal Size	Standard-No.	Diameter D_1	Collet Set D_2	Collet Set L_1	Part No.
	A 16	421 E	6.00 - 12.00	22.65	42.00	**071013**
m	A 25	459 E	6.00 - 25.00	32.90	52.00	**071014**
	A 32	460 E	6.00 - 32.00	41.30	63.00	**071020**

NOTE: Recommended to use clamping nuts with ball-bearings to lock collets

Collets for Clarkson System

	Nominal Size	Diameter D_1	Part No.
	A 16	6.00	**071304**
	A 16	8.00	**071305**
	A 16	10.00	**071306**
	A 16	12.00	**071307**
	A 25	6.00	**071308**
	A 25	8.00	**071309**
	A 25	10.00	**071310**
	A 25	12.00	**071311**
	A 25	16.00	**071312**
m	A 25	20.00	**071313**
	A 25	25.00	**071684**
	A 32	6.00	**071427**
	A 32	8.00	**071428**
	A 32	10.00	**071429**
	A 32	12.00	**071430**
	A 32	16.00	**071431**
	A 32	20.00	**071432**
	A 32	25.00	**071433**
	A 32	32.00	**071685**

B10-M: 12-13
Key on B10-I: 1
B10: VI-VII

m = Metric (mm)

Accessories for Collet Chucks

ISO 15488-B (DIN 6499-B)



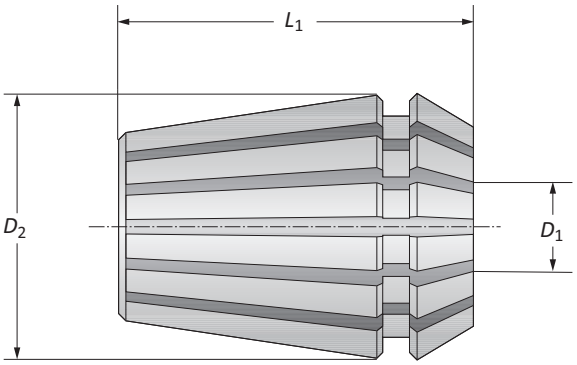

Collet Sets

	Nominal Size	Standard-No.	Diameter D_1	Collet Set D_2	Collet Set L_1	Part No.
	ER 8	4004 E	1.00 - 5.00	8.50	13.50	**071034**
	ER 11	4008 E	1.00 - 7.00	11.00	18.00	**071028**
Ⓜ	ER 16	426 E	0.50 - 10.00	16.00	27.50	**071029**
	ER 25	430 E	1.50 - 16.00	25.00	34.00	**071031**
	ER 32	470 E	2.00 - 20.00	32.00	40.00	**071032**
	ER 40	472 E	3.00 - 26.00	40.00	46.00	**071033**

Collets

	Nominal Size	Diameter D_1	Part No.
	ER 8	1.00	**071986**
	ER 8	1.50	**071987**
	ER 8	2.00	**071988**
	ER 8	2.50	**071989**
	ER 8	2.60 - 3.00	**071990**
	ER 8	3.10 - 3.50	**071991**
	ER 8	3.60 - 4.00	**071992**
	ER 8	4.10 - 4.50	**071993**
	ER 8	4.60 - 5.00	**071994**
	ER 11	1.00	**071700**
Ⓜ	ER 11	1.50	**071701**
	ER 11	2.00	**071702**
	ER 11	2.50	**071703**
	ER 11	2.60 - 3.00	**071704**
	ER 11	3.10 - 3.50	**071705**
	ER 11	3.60 - 4.00	**071706**
	ER 11	4.10 - 4.50	**071707**
	ER 11	4.60 - 5.00	**071708**
	ER 11	5.10 - 5.50	**071709**
	ER 11	5.60 - 6.00	**071710**
	ER 11	6.10 - 6.50	**071711**
	ER 11	6.60 - 7.00	**071712**

B10-M: 12-13

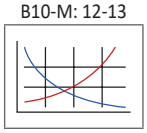

Key on B10-I: 1

B10: VI-VII

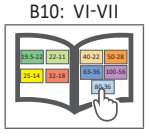

Ⓜ = Metric (mm)

Accessories for Collet Chucks

ISO 15488-B (DIN 6499-B)



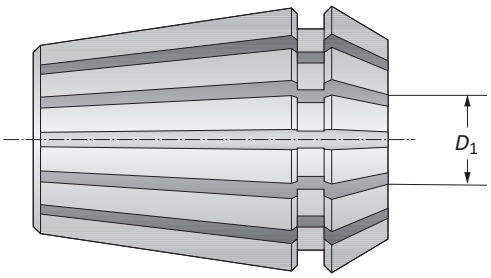

Collets

	Nominal Size	Diameter D_1	Part No.
	ER 16	0.50 - 1.00	**071713**
	ER 16	1.00 - 1.50	**071714***
	ER 16	1.00 - 2.00	**071715**
	ER 16	2.00 - 2.50	**071716***
	ER 16	2.50 - 3.00	**071717**
	ER 16	3.00 - 3.50	**071718***
	ER 16	3.50 - 4.00	**071719**
	ER 16	4.00 - 4.50	**271132***
	ER 16	4.00 - 5.00	**071720**
ⓜ	ER 16	5.00 - 5.50	**271133***
	ER 16	5.50 - 6.00	**071721**
	ER 16	6.00 - 6.50	**271134***
	ER 16	6.00 - 7.00	**071722**
	ER 16	7.00 - 7.50	**271135***
	ER 16	7.5 - 8.00	**071723**
	ER 16	8.00 - 8.50	**271136***
	ER 16	8.50 - 9.00	**071724**
	ER 16	9.00 - 9.50	**271137***
	ER 16	9.00 - 10.00	**071725**

* Items not contained in set.

B10-M: 12-13
Key on B10-I: 1
B10: VI-VII

ⓜ = Metric (mm)

Accessories for Collet Chucks

ISO 15488-B (DIN 6499-B)



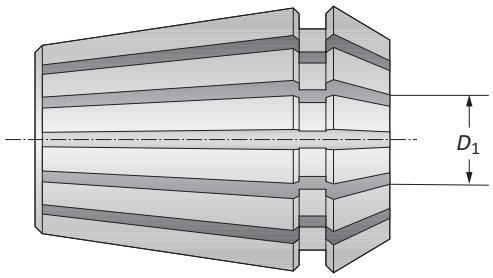

Collets

	Nominal Size	Diameter D_1	Part No.
	ER 25	1.50 - 2.00	**071743**
	ER 25	2.00 - 2.50	**071744***
	ER 25	2.50 - 3.00	**071745**
	ER 25	3.00 - 3.50	**271128***
	ER 25	3.50 - 4.00	**071746**
	ER 25	4.00 - 4.50	**271129***
	ER 25	4.50 - 5.00	**071747**
	ER 25	5.00 - 5.50	**271130***
	ER 25	5.50 - 6.00	**071748**
	ER 25	6.00 - 6.50	**271131***
	ER 25	6.50 - 7.00	**071749**
	ER 25	7.00 - 8.00	**071750**
	ER 25	8.00 - 9.00	**071751**
	ER 25	9.00 - 10.00	**071752**
	ER 25	10.00 - 11.00	**071753**
	ER 25	11.00 - 12.00	**071754**
	ER 25	12.00 - 13.00	**071755**
	ER 25	13.00 - 14.00	**071756**
	ER 25	14.00 - 15.00	**071757**
	ER 25	15.00 - 16.00	**071758**
Ⓜ	ER 32	2.00 - 3.00	**071761**
	ER 32	3.00 - 4.00	**071762**
	ER 32	4.00 - 5.00	**071763**
	ER 32	5.00 - 6.00	**071764**
	ER 32	6.00 - 7.00	**071765**
	ER 32	7.00 - 8.00	**071766**
	ER 32	8.00 - 9.00	**071767**
	ER 32	9.00 - 10.00	**071768**
	ER 32	10.00 - 11.00	**071769**
	ER 32	11.00 - 12.00	**071770**
	ER 32	12.00 - 13.00	**071771**
	ER 32	13.00 - 14.00	**071772**
	ER 32	14.00 - 15.00	**071773**
	ER 32	15.00 - 16.00	**071774**
	ER 32	16.00 - 17.00	**071775**
	ER 32	17.00 - 18.00	**071776**
	ER 32	18.00 - 19.00	**071777**
	ER 32	19.00 - 20.00	**071778**
	ER 32	17.00 - 18.00	**071776**
	ER 32	18.00 - 19.00	**071777**
	ER 32	19.00 - 20.00	**071778**

* Items not contained in set.

B10-M: 12-13
Key on B10-I: 1

B10: VI-VII

Ⓜ = Metric (mm)

Accessories for Collet Chucks

ISO 15488-B (DIN 6499-B)



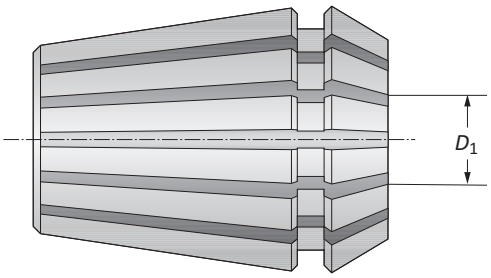

	Nominal Size	Diameter D_1	Part No.
	ER 40	3.00 - 4.00	**071779**
	ER 40	4.00 - 5.00	**071780**
	ER 40	5.00 - 6.00	**071781**
	ER 40	6.00 - 7.00	**071782**
	ER 40	7.00 - 8.00	**071783**
	ER 40	8.00 - 9.00	**071784**
	ER 40	9.00 - 10.00	**071785**
	ER 40	10.00 - 11.00	**071786**
	ER 40	11.00 - 12.00	**071787**
	ER 40	12.00 - 13.00	**071788**
	ER 40	13.00 - 14.00	**071789**
m	ER 40	14.00 - 15.00	**071790**
	ER 40	15.00 - 16.00	**071791**
	ER 40	16.00 - 17.00	**071792**
	ER 40	17.00 - 18.00	**071793**
	ER 40	18.00 - 19.00	**071794**
	ER 40	19.00 - 20.00	**071795**
	ER 40	20.00 - 21.00	**071796**
	ER 40	21.00 - 22.00	**071797**
	ER 40	22.00 - 23.00	**071798**
	ER 40	23.00 - 24.00	**071799**
	ER 40	24.00 - 25.00	**071800**
	ER 40	25.00 - 26.00	**071801**

B10-M: 12-13
Key on B10-I: 1
B10: VI-VII

m = Metric (mm)

www.alliedmachine.com | +44 (0) 1384 400 900 | enquiries.eu@alliedmachine.com

Collet Sets for Taps DIN 371/374/376

ISO 15488-B (DIN 6499-B)



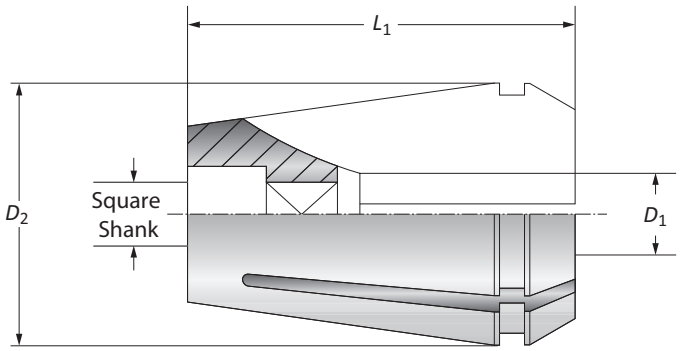

Collet Sets

	Nominal Size	Standard-No.	Clamping Range D_1	Collet Set D_2	Collet Set L_1	Part No.
	ER 16	426 EGB	4.50 - 7.00	16.00	27.50	**071045**
Ⓜ	ER 25	430 EGB	4.50 - 12.00	25.00	34.00	**071047**
	ER 32	470 EGB	4.50 - 16.00	32.00	40.00	**071048**
	ER 40	472 EGB	7.00 - 20.00	40.00	46.00	**071049**

NOTE: To lock these collets, we recommend using the clamping nuts with sliding ring for higher clamping forces.

Taps

	Shank D_1	Shank Square Shank	Tap DIN 371	Tap DIN 374	Tap DIN 376
	4.50	3.40	M 4	M 6 x...	M 6
	5.50	4.30	–	M 7 x...	M 7
	6.00	4.90	M 4,5/5/6	M 8 x...	M 8
	7.00	5.50	M 7	M 9/10 x...	M 9/10
	8.00	6.20	M 8	M 6 x...	M 11
	9.00	7.00	M 9	M 6 x...	M 12
Ⓜ	10.00	8.00	M 10	–	–
	11.00	9.00	–	M 14 x...	M 14
	12.00	9.00	M 12	M 16 x...	M 16
	14.00	11.00	–	M 18 x...	M 18
	16.00	12.00	–	M 20 x...	M 20
	18.00	14.00	–	M 22/24 x...	M 22/24
	20.00	16.00	–	M 27 x...	M 27

B10-M: 12-13

Key on B10-I: 1

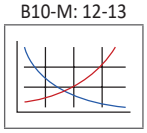

B10: VI-VII

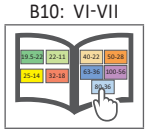

Ⓜ = Metric (mm)

Accessories for Collet Sets for Taps DIN 371/374/376

ISO 15488-B (DIN 6499-B)



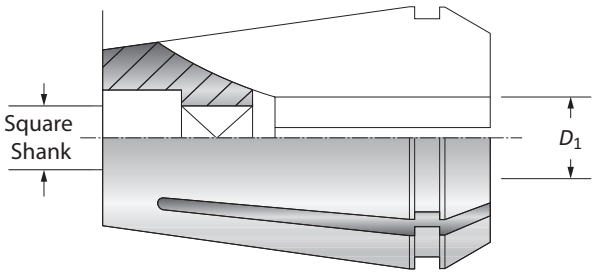

	Nominal Size	Suitable Taps D_1	Suitable Taps Square Shank	Part No.
	ER 16	4.50	3.40	**071901**
	ER 16	5.50	4.30	**071902**
	ER 16	6.00	4.90	**071903**
	ER 16	7.00	5.50	**071904**
	ER 25	4.50	3.40	**071912**
	ER 25	5.50	4.30	**071913**
	ER 25	6.00	4.90	**071914**
	ER 25	7.00	5.50	**071915**
	ER 25	8.00	6.20	**071916**
	ER 25	9.00	7.00	**071917**
	ER 25	10.00	8.00	**071918**
	ER 25	11.00	9.00	**071919**
	ER 25	12.00	9.00	**071920**
	ER 32	4.50	3.40	**071921**
	ER 32	5.50	4.30	**071922**
	ER 32	6.00	4.90	**071923**
ⓜ	ER 32	7.00	5.50	**071924**
	ER 32	8.00	6.20	**071925**
	ER 32	9.00	7.00	**071926**
	ER 32	10.00	8.00	**071927**
	ER 32	11.00	9.00	**071928**
	ER 32	12.00	9.00	**071929**
	ER 32	14.00	11.00	**071930**
	ER 32	16.00	12.00	**071931**
	ER 40	7.00	5.50	**071932**
	ER 40	8.00	6.20	**071933**
	ER 40	9.00	7.00	**071934**
	ER 40	10.00	8.00	**071935**
	ER 40	11.00	9.00	**071936**
	ER 40	12.00	9.00	**071937**
	ER 40	14.00	11.00	**071938**
	ER 40	16.00	12.00	**071939**
	ER 40	18.00	14.50	**071940**
	ER 40	20.00	16.00	**071941**

B10-M: 12-13
Key on B10-I: 1
B10: VI-VII

ⓜ = Metric (mm)

Accessories for Collet Chucks: ISO 15488-B (DIN 6499-B)

Collets



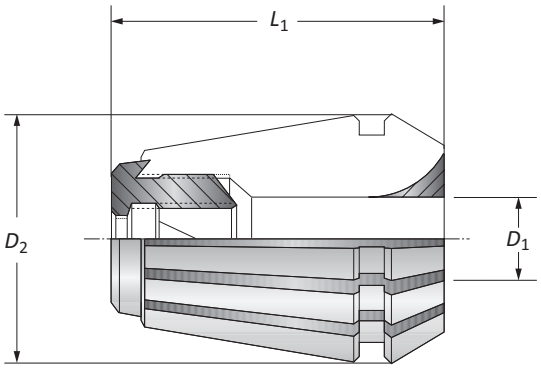

Collets for Mill Cutters with Pull Thread System

	Nominal Size	Standard-No.	Clamping Range D_2	Collet L_1	Collet D_1	Part No.
ⓜ	ER 32	470 ECL	32.00	46.00	6.00 - 16.00	**071052**
	ER 40	472 ECL	40.00	52.00	6.00 - 25.00	**071053**

Collets

	Nominal Size	Collet D_1	Part No.
	ER 32	6.00	**071826**
	ER 32	8.00	**071827**
	ER 32	10.00	**071828**
	ER 32	12.00	**071829**
	ER 32	16.00	**071830**
ⓜ	ER 40	6.00	**071831**
	ER 40	8.00	**071832**
	ER 40	10.00	**071833**
	ER 40	12.00	**071834**
	ER 40	16.00	**071835**
	ER 40	20.00	**071836**
	ER 40	25.00	**071837**

NOTE: To lock these collets, we recommend using the clamping nuts with sliding ring for higher clamping forces.

B10-M: 12-13
Key on B10-I: 1
B10: VI-VII

Collet Kit Set Accessories for Collet Chucks



Collet Kits: ISO 15488 (DIN 6499)

	Nominal Size	Kit Width	Kit Depth	Kit Height	Kit Collet Space	Kit Part No.
ⓜ	ER 16	140.00	72.00	45.00	10.00	**099049**
	ER 25	196.00	112.00	50.00	15.00	**099050**
	ER 32	251.00	140.00	56.00	18.00	**099051**

Collet Kits: ISO 10897 (DIN 6388)

	Nominal Size	Kit Width	Kit Depth	Kit Height	Kit Collet Space	Kit Part No.
ⓜ	ER 16	226.00	161.00	85.00	15.00	**099053**
	ER 25	333.00	201.00	85.00	24.00	**099054**
	ER 32	320.00	210.00	85.00	15.00	**099055**

B10-M: 12-13

Key on B10-I: 1

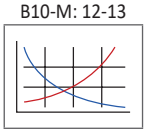

B10: VI-VII

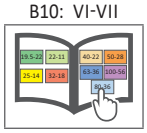

ⓜ = Metric (mm)

Accessories for Collet Chucks: ISO 10897 (DIN 6388)

Clamping Nuts

Clamping Nuts: DIN 6388 / ISO 10897 - 1:10

	Nominal Size	Clamping Nut D_1	Clamping Nut L_1	Clamping Range	Torque	Part No.
ⓜ	16	43.00	24.00	2.00 - 16.00	100 Nm	**068048**
ⓜ	25	60.00	30.00	2.00 - 25.00	180 Nm	**068052**
ⓜ	32	72.00	33.50	4.00 - 32.00	220 Nm	**161099**

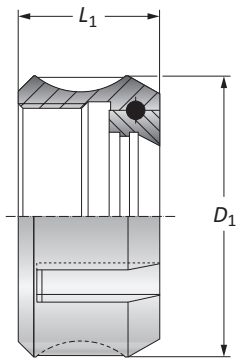

Clamping Nuts for Sealing Discs: DIN 6388 / ISO 10897 - 1:10

	Nominal Size	Clamping Nut D_1	Clamping Nut L_1	Clamping Range	Torque	Part No.
ⓜ	16	43.00	31.50	2.00 - 16.00	100 Nm	**275001**
ⓜ	25	60.00	38.00	2.00 - 25.00	180 Nm	**275003**
ⓜ	32	72.00	42.00	4.00 - 32.00	220 Nm	**276001**

NOTE: with ball-bearing, for use with sealing discs

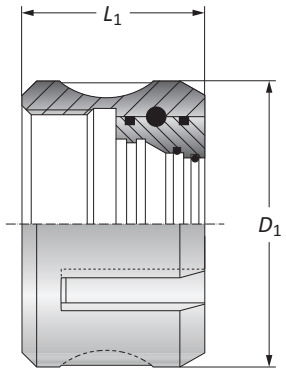

Mini Clamping Nuts

	Nominal Size	Clamping Nut D_1	Clamping Nut L_1	Clamping Range	Torque	Part No.
ⓜ	ER 08	12.00	10.80	1.00 - 4.00	8 Nm	**415357**
ⓜ	ER 11	16.00	12.00	1.00 - 7.00	16 Nm	**415358**
ⓜ	ER 16	22.00	18.00	1.00 - 10.00	25 Nm	**415359**

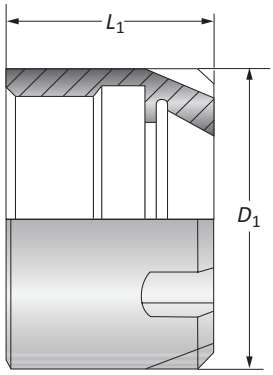

Clamping Nuts for Erickson Collet Chuck System

	Nominal Size	Clamping Nut D_1	Clamping Nut L_1	Clamping Range	Part No.
ⓜ	6	14.00	28.00	1.00 - 6.50	**162095**
ⓜ	10	21.00	36.00	1.00 - 10.00	**162093**

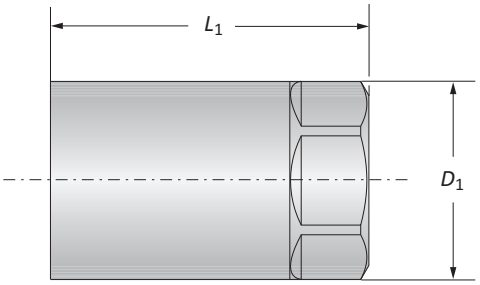

B10-M: 12-13
Key on B10-I: 1
B10: VI-VII

ⓜ = Metric (mm)

Accessories for Collet Chucks: ISO 15488 (DIN 6499)

Clamping Nuts

One Piece Clamping Nuts: DIN 6499 / ISO 15488 - 8°

	Nominal Size	Clamping Nut D_1	L_1	Clamping Range	Torque	Part No.
ⓜ	ER 16	28.00	17.50	1.00 - 10.00	60 Nm	**215922**
	ER 25	42.00	20.00	2.00 - 16.00	100 Nm	**215924**
	ER 32	50.00	22.50	2.00 - 20.00	140 Nm	**215925**
	ER 40	63.00	25.50	4.00 - 26.00	180 Nm	**215926**

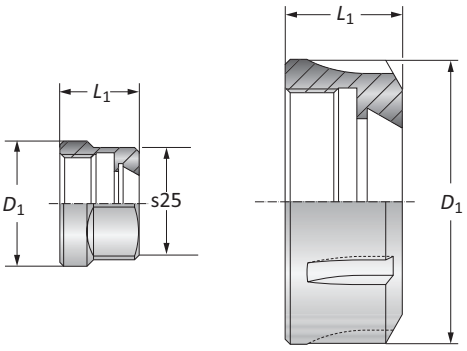

Clamping Nuts with Sliding Ring: DIN 6499 / ISO 15488 - 8°

	Nominal Size	Clamping Nut D_1	L_1	Clamping Range	Torque	Part No.
ⓜ	ER 16	28.00	20.30	1.00 - 10.00	60 Nm	**315015**
	ER 25	42.00	22.40	2.00 - 16.00	100 Nm	**315016**
	ER 32	50.00	25.00	2.00 - 20.00	140 Nm	**315017**
	ER 40	63.00	28.30	4.00 - 26.00	180 Nm	**315018**

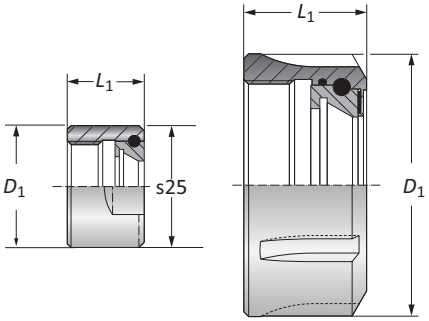

One Piece Clamping Nuts for use with Sealing Disks: DIN 6499 / ISO 15488 - 8°

	Nominal Size	Clamping Nut D_1	L_1	Clamping Range	Torque	Part No.
ⓜ	ER 16	28.00	25.00	1.00 - 10.00	60 Nm	**277001**
	ER 25	42.00	27.50	2.00 - 16.00	100 Nm	**277005**
	ER 32	50.00	30.50	2.00 - 20.00	140 Nm	**277007**
	ER 40	63.00	34.00	4.00 - 26.00	180 Nm	**278001**

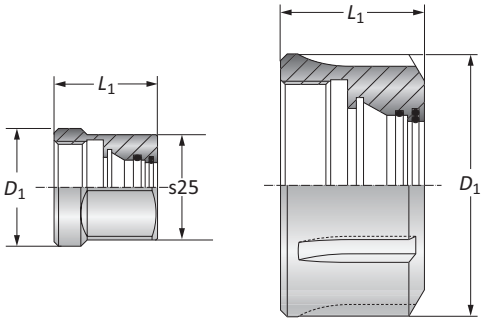

Clamping Nuts with Sliding Ring for use with Sealing Disks: DIN 6499 / ISO 15488 - 8°

	Nominal Size	Clamping Nuts: ISO 15488 (DIN 6499) D_1	L_1	Clamping Range	Torque	Part No.
ⓜ	ER 16	28.00	25.00	1.00 - 10.00	60 Nm	**277002**
	ER 25	42.00	28.50	2.00 - 16.00	100 Nm	**277006**
	ER 32	50.00	31.50	2.00 - 20.00	140 Nm	**277008**
	ER 40	63.00	35.00	4.00 - 26.00	180 Nm	**278002**

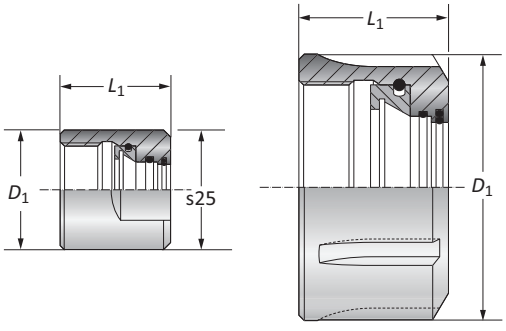

B10-M: 12-13

Key on B10-I: 1

B10: VI-VII

ⓜ = Metric (mm)

Sealing Disks for Collet Chucks: ISO 10897 (DIN 6388)



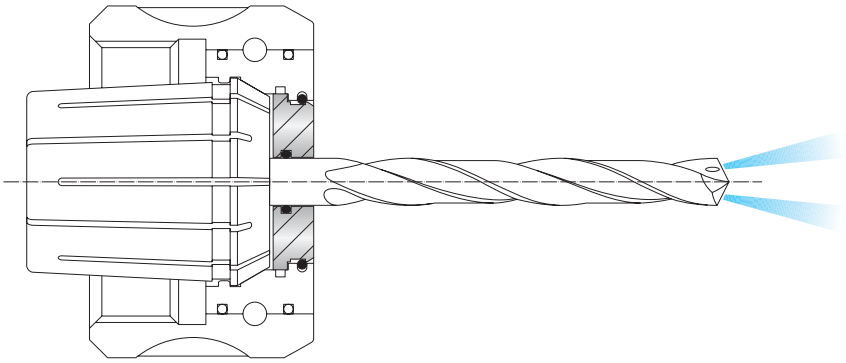

	Nominal Size	Sealing Disk Diameter	Sealing Disk Part No.	Sealing Disk Diameter	Sealing Disk Part No.	Sealing Disk Diameter	Sealing Disk Part No.	Sealing Disk Diameter	Sealing Disk Part No.
	16	2.50 - 3.00	**275010**	6.00 - 6.50	**275017**	9.50 - 10.00	**275024**	13.00 - 13.50	**275031**
	16	3.00 - 3.50	**275011**	6.50 - 7.00	**275018**	10.00 - 10.50	**275025**	13.50 - 14.00	**275032**
	16	3.50 - 4.00	**275012**	7.00 - 7.50	**275019**	10.50 - 11.00	**275026**	14.00 - 14.50	**275033**
	16	4.00 - 4.50	**275013**	7.50 - 8.00	**275020**	11.00 - 11.50	**275027**	14.50 - 15.00	**275034**
	16	4.50 - 5.00	**275014**	8.00 - 8.50	**275021**	11.50 - 12.00	**275028**	15.00 - 15.50	**275035**
	16	5.00 - 5.50	**275015**	8.50 - 9.00	**275022**	12.00 - 12.50	**275029**	15.50 - 16.00	**275036**
	16	5.50 - 6.00	**275016**	9.00 - 9.50	**275023**	12.50 - 13.00	**275030**	–	–
	25	2.50 - 3.00	**275040**	8.50 - 9.00	**275052**	14.50 - 15.00	**275064**	20.50 - 21.00	**275076**
	25	3.00 - 3.50	**275041**	9.00 - 9.50	**275053**	15.00 - 15.50	**275065**	21.00 - 21.50	**275077**
	25	3.50 - 4.00	**275042**	9.50 - 10.00	**275054**	15.50 - 16.00	**275066**	21.50 - 22.00	**275078**
	25	4.00 - 4.50	**275043**	10.00 - 10.50	**275055**	16.00 - 16.50	**275067**	22.00 - 22.50	**275079**
	25	4.50 - 5.00	**275044**	10.50 - 11.00	**275056**	16.50 - 17.00	**275068**	22.50 - 23.00	**275080**
	25	5.00 - 5.50	**275045**	11.00 - 11.50	**275057**	17.00 - 17.50	**275069**	23.00 - 23.50	**275081**
	25	5.50 - 6.00	**275046**	11.50 - 12.00	**275058**	17.50 - 18.00	**275070**	23.50 - 24.00	**275082**
	25	6.00 - 6.50	**275047**	12.00 - 12.50	**275059**	18.00 - 18.50	**275071**	24.00 - 24.50	**275083**
	25	6.50 - 7.00	**275048**	12.50 - 13.00	**275060**	18.50 - 19.00	**275072**	24.50 - 25.00	**275084**
Ⓜ	25	7.00 - 7.50	**275049**	13.00 - 13.50	**275061**	19.00 - 19.50	**275073**	–	–
	25	7.50- 8.00	**275050**	13.50 - 14.00	**275062**	19.50 - 20.00	**275074**	–	–
	25	8.00 - 8.50	**275051**	14.00 - 14.50	**275063**	20.00 - 20.50	**275075**	–	–
	32	3.50 - 4.00	**276005**	11.00 - 11.50	**276020**	18.50 - 19.00	**276035**	26.00 - 26.50	**276050**
	32	4.00 - 4.50	**276006**	11.50 - 12.00	**276021**	19.00 - 19.50	**276036**	26.50 - 27.00	**276051**
	32	4.50 - 5.00	**276007**	12.00 - 12.50	**276022**	19.50 - 20.00	**276037**	27.50 - 28.00	**276052**
	32	5.00 - 5.50	**276008**	12.50 - 13.00	**276023**	20.00 - 20.50	**276038**	27.50 - 28.00	**276053**
	32	5.50 - 6.00	**276009**	13.00 - 13.50	**276024**	20.50 - 21.00	**276039**	28.00 - 28.50	**276054**
	32	6.00 - 6.50	**276010**	13.50 - 14.00	**276025**	21.00- 21.50	**276040**	28.50 - 29.00	**276055**
	32	6.50 - 7.00	**276011**	14.00 - 14.50	**276026**	21.50 - 22.00	**276041**	29.00 - 29.50	**276056**
	32	7.00 - 7.50	**276012**	14.50 - 15.00	**276027**	22.00 - 22.50	**276042**	29.50 - 30.00	**276057**
	32	7.50 - 8.00	**276013**	15.00 - 15.50	**276028**	22.50 - 23.00	**276043**	30.00 - 30.50	**276058**
	32	8.00 - 8.50	**276014**	15.50 - 16.00	**276029**	23.00 - 23.50	**276044**	30.50 - 31.00	**276059**
	32	8.50 - 9.00	**276015**	16.00 - 16.50	**276030**	23.50 - 24.00	**276045**	31.00 - 31.50	**276060**
	32	9.00 - 9.50	**276016**	16.50 - 17.00	**276031**	24.00 - 24.50	**276046**	31.50 - 32.00	**276061**
	32	9.50 - 10.00	**276017**	17.00 - 17.50	**276032**	24.50 - 25.00	**276047**	–	–
	32	10.00 - 10.50	**276018**	17.50 - 18.00	**276033**	25.00 - 25.50	**276048**	–	–
	32	10.50 - 11.00	**276019**	18.00 - 18.50	**276034**	25.50 - 26.00	**276049**	–	–

B10-M: 12-13

Key on B10-I: 1

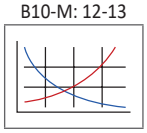

B10: VI-VII

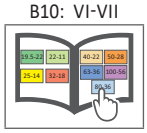

Ⓜ = Metric (mm)

Sealing Disks Collet Chucks: ISO 15488 (DIN 6499)



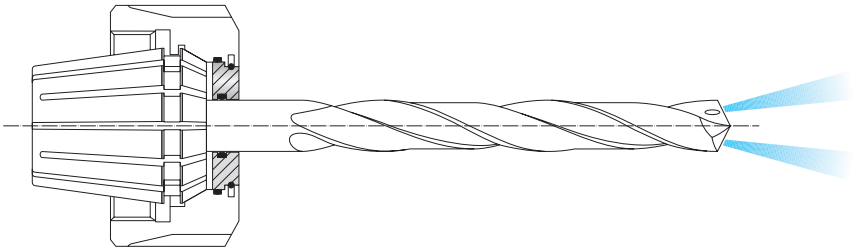

	Nominal Size	Sealing Disk Diameter	Sealing Disk Part No.	Sealing Disk Diameter	Sealing Disk Part No.	Sealing Disk Diameter	Sealing Disk Part No.	Sealing Disk Diameter	Sealing Disk Part No.
	ER 16	2.50 - 3.00	**277010**	4.50 - 5.00	**277014**	6.50 - 7.00	**277018**	8.50 - 9.00	**277022**
	ER 16	3.00 - 3.50	**277011**	5.00 - 5.50	**277015**	7.00 - 7.50	**277019**	9.00 - 9.50	**277023**
	ER 16	3.50 - 4.00	**277012**	5.50 - 6.00	**277016**	7.50 - 8.00	**277020**	9.50 - 10.00	**277024**
	ER 16	4.00 - 4.50	**277013**	6.00 - 6.50	**277017**	8.00 - 8.50	**277021**	–	–
	ER 25	2.50 - 3.00	**277025**	6.00 - 6.50	**277032**	9.50 - 10.00	**277039**	13.00 - 13.50	**277046**
	ER 25	3.00 - 3.50	**277026**	6.50 - 7.00	**277033**	10.00 - 10.50	**277040**	13.50 - 14.00	**277047**
	ER 25	3.50 - 4.00	**277027**	7.00 - 7.50	**277034**	10.50 - 11.00	**277041**	14.00 - 14.50	**277048**
	ER 25	4.00 - 4.50	**277028**	7.50 - 8.00	**277035**	11.00 - 11.50	**277042**	14.50 - 15.00	**277049**
	ER 25	4.50 - 5.00	**277029**	8.00 - 8.50	**277036**	11.50 - 12.00	**277043**	15.00 - 15.50	**277050**
	ER 25	5.00 - 5.50	**277030**	8.50 - 9.00	**277037**	12.00 - 12.50	**277044**	15.50 - 16.00	**277051**
	ER 25	5.50 - 6.00	**277031**	9.00 - 9.50	**277038**	12.50 - 13.00	**277045**	–	–
	ER 32	2.50 - 3.00	**277055**	7.00 - 7.50	**277064**	11.50 - 12.00	**277073**	16.00 - 16.50	**277082**
	ER 32	3.00 - 3.50	**277056**	7.50 - 8.00	**277065**	12.00 - 12.50	**277074**	16.50 - 17.00	**277083**
	ER 32	3.50 - 4.00	**277057**	8.00 - 8.50	**277066**	12.50 - 13.00	**277075**	17.00 - 17.50	**277084**
	ER 32	4.00 - 4.50	**277058**	8.50 - 9.00	**277067**	13.00 - 13.50	**277076**	17.50 - 18.00	**277085**
ⓜ	ER 32	4.50 - 5.00	**277059**	9.00 - 9.50	**277068**	13.50 - 14.00	**277077**	18.00 - 18.50	**277086**
	ER 32	5.00 - 5.50	**277060**	9.50 - 10.00	**277069**	14.00 - 14.50	**277078**	18.50 - 19.00	**277087**
	ER 32	5.50 - 6.00	**277061**	10.00 - 10.50	**277070**	14.50 - 15.00	**277079**	19.00 - 19.50	**277088**
	ER 32	6.00 - 6.50	**277062**	10.50 - 11.00	**277071**	15.00 - 15.50	**277080**	19.50 - 20.00	**277089**
	ER 32	6.50 - 7.00	**277063**	11.00 - 11.50	**277072**	15.50 - 16.00	**277081**	–	–
	ER 40	2.50 - 3.00	**278005**	8.50 - 9.00	**278017**	14.50 - 15.00	**278029**	20.50 - 21.00	**278041**
	ER 40	3.00 - 3.50	**278006**	9.00 - 9.50	**278018**	15.00 - 15.50	**278030**	21.00 - 21.50	**278042**
	ER 40	3.50 - 4.00	**278007**	9.50 - 10.00	**278019**	15.50 - 16.00	**278031**	21.50 - 22.00	**278043**
	ER 40	4.00 - 4.50	**278008**	10.00 - 10.50	**278020**	16.00- 16.50	**278032**	22.00 - 22.50	**278044**
	ER 40	4.50 - 5.00	**278009**	10.50 - 11.00	**278021**	16.50 - 17.00	**278033**	22.50 - 23.00	**278045**
	ER 40	5.00 - 5.50	**278010**	11.00 - 11.50	**278022**	17.00 - 17.50	**278034**	23.00 - 23.50	**278046**
	ER 40	5.50 - 6.00	**278011**	11.50 - 12.00	**278023**	17.50 - 18.00	**278035**	23.50 - 24.00	**278047**
	ER 40	6.00 - 6.50	**278012**	12.00 - 12.50	**278024**	18.00 - 18.50	**278036**	24.00 - 24.50	**278048**
	ER 40	6.50 - 7.00	**278013**	12.50 - 13.00	**278025**	18.50 - 19.00	**278037**	24.50 - 25.00	**278049**
	ER 40	7.00 - 7.50	**278014**	13.00 - 13.50	**278026**	19.00 - 19.50	**278038**	25.00 - 25.50	**278050**
	ER 40	7.50 - 8.00	**278015**	13.50 - 14.00	**278027**	19.50 - 20.00	**278039**	25.50 - 26.00	**278051**
	ER 40	8.00 - 8.50	**278016**	14.00 - 14.50	**278028**	20.00 - 20.50	**278040**	–	–

B10-M: 12-13

Key on B10-I: 1

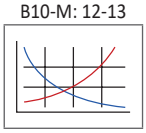

B10: VI-VII

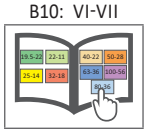

ⓜ = Metric (mm)

Accessories for Milling Machine Arbors

Accessories for Milling Machine Arbors

Shell-Mill Adapter	Part No. 1 Clutch Drive Ring	2 Axial Drive Key	3 Retaining Screw
13	**115708**	**115709**	**115707**
16	**115696**	**215608**	**115697**
22	**115341**	**215609**	**115345**
27	**115342**	**215610**	**115346**
32	**115343**	**215611**	**115347**
40	**115344**	**215612**	**115348**

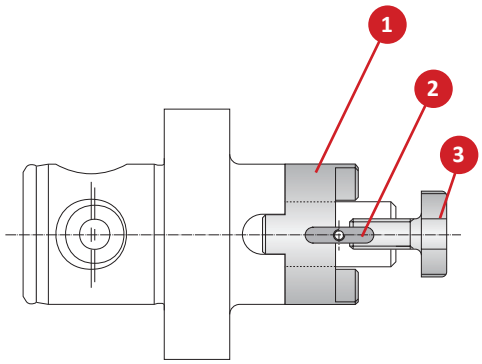

Accessories for Milling Machine Arbors

Shell-Mill Adapter	Part No. 1 Drive Key	2 Cap Screw	3 Retaining Screw
16	**215701**	**115566**	**115697**
22	**215702**	**108109**	**115345**
27	**215703**	**109109**	**115346**
32	**215704**	**115147**	**115347**
40	**215705**	**116152**	**115348**
60	**115643**	**115237**	–

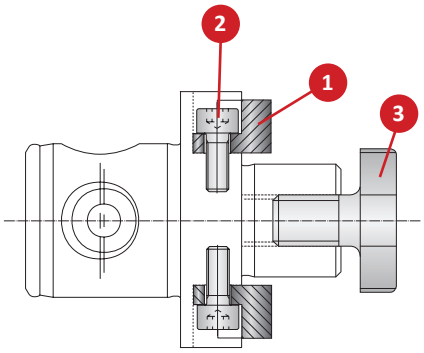

Accessories for Holding Arbors

Adapter Sleeves	Part No. 1 Cap Screw	Service Key
209022	**115929**	s5
209023	**115930**	s7
209024	**115932**	s8
209025	**115933**	s5
209026	**115169**	s8
209027	**115934**	s10
209028	**115936**	s12

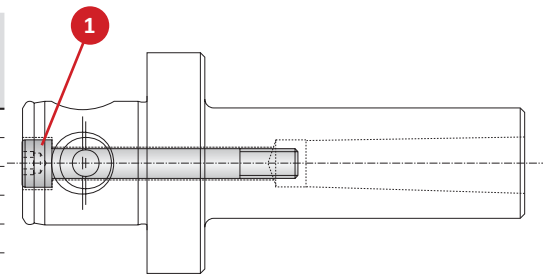

B10-M: 12-13

Key on B10-I: 1

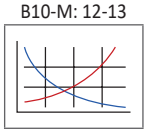

B10: VI-VII

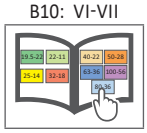

Ⓜ = Metric (mm)

Reducing Sleeves for Hydraulic Clamping Chucks

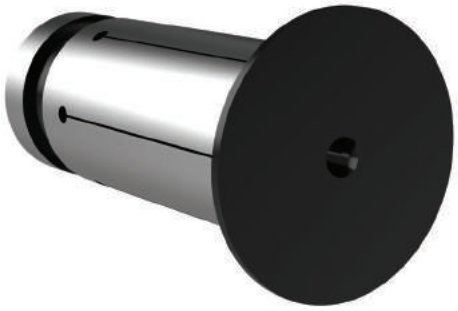

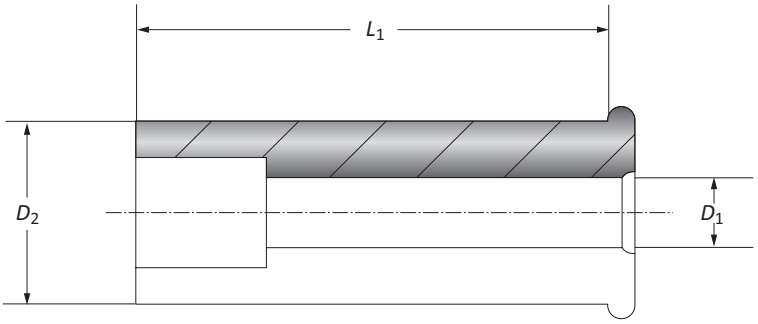

	Nominal Size D_2	Reducing Sleeve D_1	L_1	Part No.
	20.00	3.00	50.50	**271045**
	20.00	4.00	50.50	**271046**
	20.00	5.00	50.50	**271047**
	20.00	6.00	50.50	**271070**
	20.00	7.00	50.50	**271049**
	20.00	8.00	50.50	**271004**
m	20.00	9.00	50.50	**271050**
	20.00	10.00	50.50	**271005**
	20.00	11.00	50.50	**271051**
	20.00	12.00	50.50	**271073**
	20.00	13.00	50.50	**271052**
	20.00	14.00	50.50	**271074**
	20.00	15.00	50.50	**271018**
	20.00	16.00	50.50	**271008**

NOTE: For cylindrical shanks with shank tolerance h6 for clamping diameter 3 mm and 8 mm and with shank tolerance h7 for clamping diameter 10 mm - 32 mm.
NOTE: Reduction sleeve with adjustable stop.

B10-M: 12-13

Key on B10-I: 1

B10: VI-VII

m = Metric (mm)

Quick Change Adapters



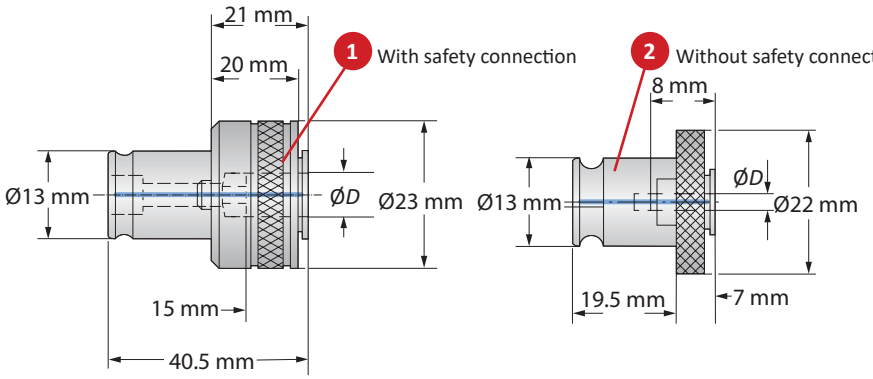

Shank Dimensions		Quick Change Adapter								Part No.	
Nominal Size	*D* x Square Shank	DIN 352	DIN 353	DIN 371	DIN 374	DIN 376	DIN 2182	DIN 2183	Torque Setting	1	2
0	2.10 x 2.50	M 1	–	M 1	–	M 3.5	1/16"	–	1.5 - 2	**233070**	**K24358**
0	2.10 x 2.80	M 2	–	M 2	M 4	M 4	3/32"	5/32"	2 - 3	**233071**	**K24276**
0	2.70 x 3.50	M 3	–	M 3	M 5	M 5	1/8"	–	4 - 6	**233072**	**K24277**
0	3.00 x 4.00	M 3.5	–	M 3.5	–	–	–	–	1.5 - 2	**233073**	**K24278**
0	3.40 x 4.50	M 4	–	M 4	M 6	M 6	5/32"	1/4"	6 - 9	**233074**	**K24279**
0	4.90 x 6.00	M 8	–	–	M 8	M 8	–	–	16 - 21	**233075**	**K24280**
0	5.50 x 7.00	M 10	G 1/8"	–	M 10	M 10	1/4"	3/8"	27 - 32	**233076**	**K24281**
0	6.20 x 8.00	–	–	M 8	–	–	5/16"	7/16"	16 - 21	**233077**	**K24391**

NOTE: Quick change adapters are typically set to the torque value shown in the table.

B10-M: 12-13
Key on B10-I: 1
B10: VI-VII

Quick Change Adapters



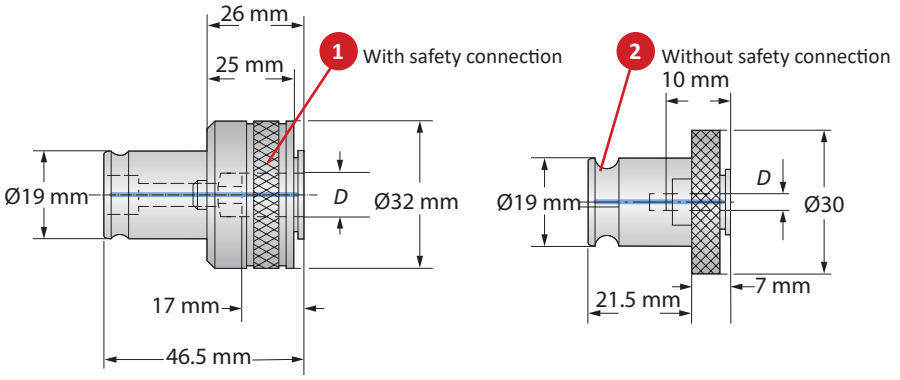

Quick Change Adapters

	Shank Dimensions		Quick Change Adapter								Part No.	
	Nominal Size	*D* x Square Shank	DIN 352	DIN 353	DIN 371	DIN 374	DIN 376	DIN 2182	DIN 2183	Torque Setting	1	2
	1	2.10 x 2.80	M 2	–	M 2.8	M 4	M 4	3/32"	5/32"	2 - 3	**K17847**	**K23259**
	1	2.70 x 3.50	M 3	–	M 3.5	M 5	M 5	1/8"	–	4 - 6	**233001**	**K18455**
	1	3.00 x 4.00	M 3.5	–	M 3.5	–	–	–	–	1.5 - 2	**233002**	**K22439**
	1	3.40 x 4.50	M 4	–	M 4	M 6	M 6	5/32"	1/4"	6 - 9	**233003**	**K16414**
m	1	4.90 x 6.00	M 8	–	–	M 8	M 8	–	–	16 - 21	**233004**	**K16415**
	1	5.50 x 7.00	M 10	–	–	M 10	M 10	1/4"	3/8"	27 - 32	**233005**	**K16418**
	1	6.20 x 8.00	–	G 1/8"	M 8	–	–	5/16"	7/16"	16 - 21	**233006**	**K16416**
	1	7.00 x 9.00	M 12	–	–	M 12	M 12	3/8"	1/2"	37 - 44	**233007**	**K18454**
	1	8.00 x 10.00	–	–	M 10	–	–	–	–	27 - 32	**233008**	**K16417**
	1	9.00 x 11.00	M 14	G 1/4"	–	M 14	M 14	–	9/16"	50 - 53	**233009**	**K22440**

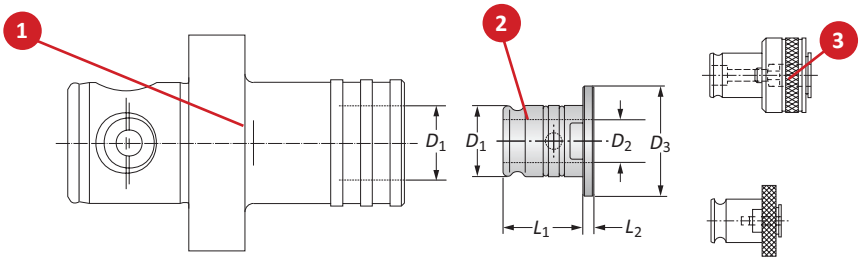

Reducers for Quick Change Adapters

	1 Tapping Chuck		2 Quick Change Adapter		3. Reducer					Weight	Part No.
	Nominal Size	D_1	Nominal Size	D_1	D_1	D_2	D_3	L_1	L_2		
m	1	19.00	0	13.00	19.00	13.00	30.00	21.50	4.00	0.12 (kg)	**161038**
	2	31.00	1	19.00	31.00	19.00	48.00	35.00	5.00	0.48 (kg)	**162094**

B10-M: 12-13

Key on B10-I: 1

B10: VI-VII

m = Metric (mm)

Quick Change Adapters



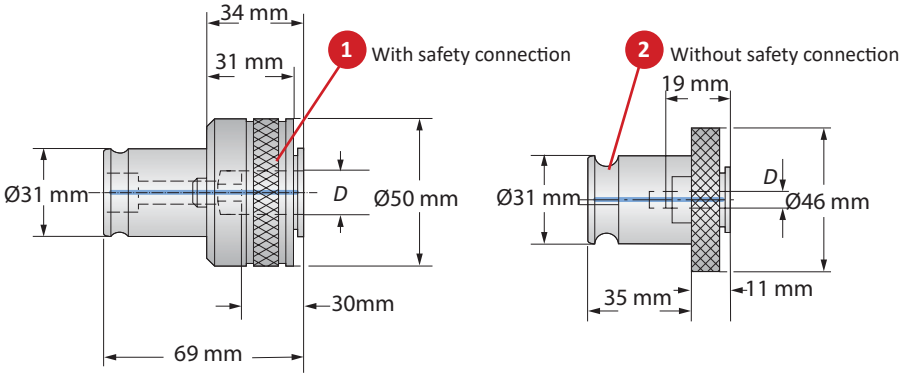

Quick Change Adapters

	Shank Dimensions		Quick Change Adapter								Part No.	
	Nominal Size	*D* x Square Shank	DIN 352	DIN 353	DIN 371	DIN 374	DIN 376	DIN 2182	DIN 2183	Torque Setting	1	2
	2	5.50 x 7.00	M 10	G ⅛"	–	M 10	M 10	¼"	⅜"	24 - 32	**233020**	**K15282**
	2	6.20 x 8.00	–	–	M 8	–	–	5/16"	7/16"	16 - 21	**233021**	**K15283**
	2	7.00 x 9.00	M 12	–	–	M 12	M 12	⅜"	½"	37 - 44	**233022**	**K15284**
	2	8.00 x 10.00	–	–	M 10	–	–	–	–	27 - 32	**233023**	**K18456**
Ⓜ	2	9.00 x 11.00	M 14	G ¼"	–	M 14	M 14	–	9/16"	50 - 53	**233024**	**K16419**
	2	9.00 x 12.00	M 16	G ⅜"	–	M 16	M 16	–	⅝"	55 - 58	**233025**	**K15285**
	2	11.00 x 14.00	M 18	–	–	M 18	M 18	–	11/16"	85 - 90	**233026**	**K16420**
	2	12.00 x 16.00	M 20	G ½"	–	M 20	M 20	–	13/16"	110 - 115	**233027**	**K15286**
	2	14.50 x 18.00	M 24	–	–	M 24	M 24	–	15/16"	110 - 115	**233028**	**K18457**

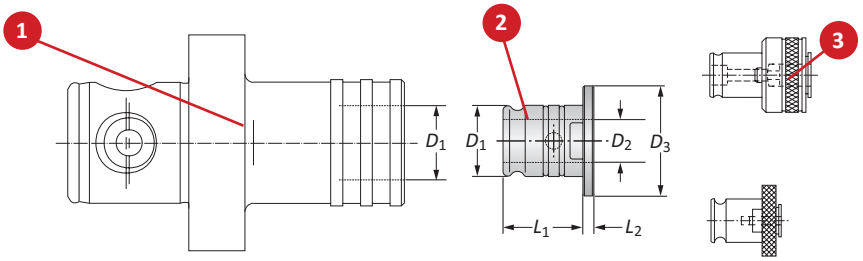

Reducers for Quick Change Adapters

	1 Tapping Chuck		2 Quick Change Adapter		3 Reducer						
	Nominal Size	D_1	Nominal Size	D_1	D_1	D_2	D_3	L_1	L_2	Weight	Part No.
Ⓜ	1	19.00	0	13.00	19.00	13.00	30.00	21.50	4.00	0.12 (kg)	**161038**
	2	31.00	1	19.00	31.00	19.00	48.00	35.00	5.00	0.48 (kg)	**162094**

B10-M: 12-13

Key on B10-I: 1

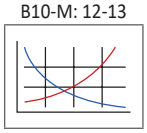

B10: VI-VII

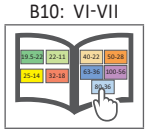

Ⓜ = Metric (mm)

Quick Change Adapters



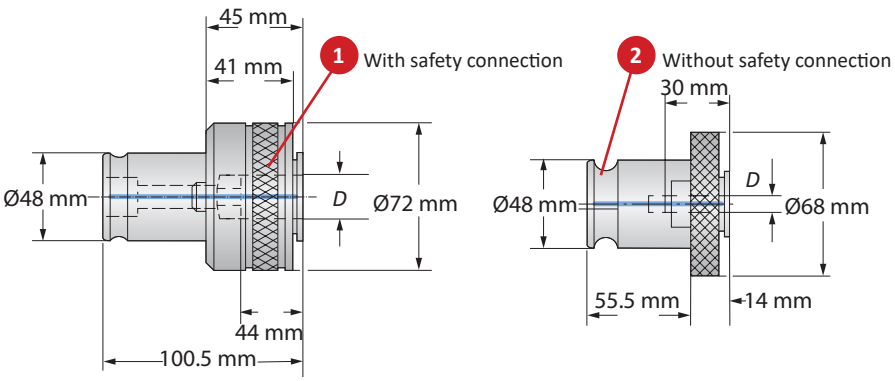

	Shank Dimensions		Quick Change Adapters								Part No.	
	Nominal Size	*D* x Square Shank	DIN 352	DIN 353	DIN 371	DIN 374	DIN 376	DIN 2182	DIN 2183	Torque Setting	1	2
	3	9.00 x 11.00	M 14	G ¼"	–	M 14	M 14	–	9/18"	50 - 53	**233040**	**K22434**
	3	9.00 x 12.00	M 16	G ⅜"	–	M 16	M 16	–	⅝"	55 - 58	**233041**	**K22435**
	3	11.00 x 14.00	M 18	–	–	M 18	M 18	–	11/16"	85 - 90	**233042**	**K22436**
	3	12.00 x 16.00	M 20	G ½"	–	M 20	M 20	–	13/18"	100 - 106	**233043**	**K22437**
ⓜ	3	14.50 x 18.00	M 24	–	–	M 24	M 24	–	15/16"	140 - 150	**233044**	**K16421**
	3	16.50 x 20.00	M 27	G ¾"	–	M 27	M 27	–	1"	150 - 160	**233045**	**K16422**
	3	18.00 x 22.00	M 30	G ⅞"	–	M 30	M 30	–	1 ⅛"	240 - 250	**233046**	**K16423**
	3	22.00 x 25.00	M 33	G 1"	–	M 33	M 33	–	1 ¼"	260 - 270	**233047**	**K16424**
	3	22.00 x 28.00	M 36	G 1 ⅛"	–	M 36	M 36	–	1 ⅜"	260 - 270	**233048**	**K22438**

B10-M: 12-13
Key on B10-I: 1
B10: VI-VII

ⓜ = Metric (mm)

Service Keys for Collet Systems

Service Keys for ISO 10897 (DIN 6388) Collet Chuck Systems

Service Key			
Nominal Size	Size	Type	Part No.
16	40 - 43	S	**068179**
25	58 - 62	S	**068182**
32	68 - 75	S	**115867**

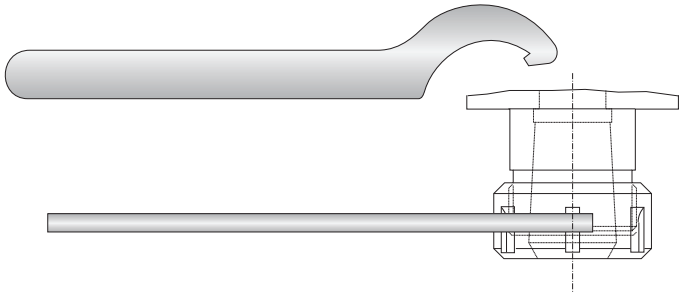

Service Keys for ISO 15488 (DIN 6499) Collet Chuck Systems

Service Key				
Nominal Size	Size	Service Key	Type	Part No.
ER 08 Mini	9.0	–	X	**415373**
ER 11 Mini	12.0	–	X	**415374**
ER 16 Mini	17.5	–	X	**415375**
ER 16	–	25	P	**215927**
ER 25	42.0	–	T	**215929**
ER 32	50.0	–	T	**215930**
ER 40	63.0	–	T	**215931**



Service Keys for Erickson Collet Chuck Systems

Service Key		
Service Key	Type	Part No.
13	P	**315689**
19	P	**315691**

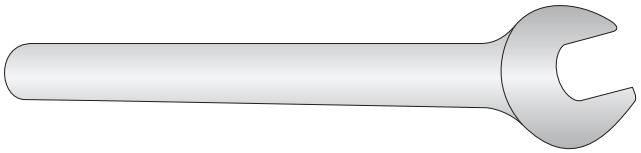

Service Keys for Milling Machine and Holding Arbors

Service Keys	
Service Key	Part No.
13	**115785**
16	**115699**
22	**115660**
27	**115661**
32	**115662**
40	**115663**
60	**315637**

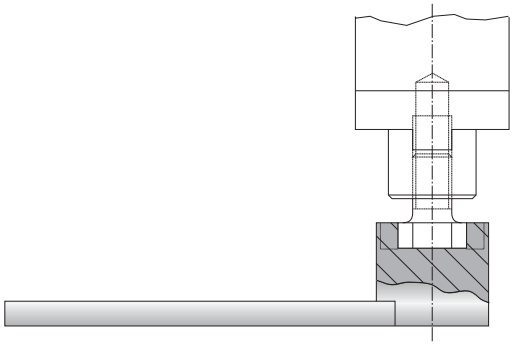

B10-M: 12-13
Key on B10-I: 1
B10: VI-VII

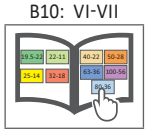

SECTION

B10-J

UPA Versatile Boring Heads

Wohlhaupter® UPA Versatile Boring Heads

UPA 3 | UPA 4 | UPA 5-S 6

- Diameter Range: 0.00 mm - 620.00 mm



Operation Facing and Boring

In 1936, the first model of the Wohlhaupter Universal Facing and Boring head was developed to launch the start of Wohlhaupter boring products. It became a staple to the boring industry.

Universal Facing and Boring heads are used on universal milling and boring machines, boring mills, and jig boring machines for machining stationary workpieces in individual and batch productions.

Applicable Industries

Aerospace | Agriculture | Automotive | Firearms | General Machining | Oil & Gas | Renewable Energy

Your safety and the safety of others is very important. This catalogue contains important safety messages. Always read and follow all safety precautions.

This triangle is a safety hazard symbol. It alerts you to potential safety hazards that can cause tool failure and serious injury.

When you see this symbol in the catalogue, look for a related safety message that may be near this triangle or referred to in the nearby text.

There are safety signal words also used in the catalogue. Safety messages follow these words.

⚠ WARNING

WARNING (shown above) means that failure to follow the precautions in this message could result in tool failure and serious injury.

NOTICE means that failure to follow the precautions in this message could result in damage to the tool or machine but not result in personal injury.

NOTE and **IMPORTANT** are also used. These are important that you read and follow but are not safety-related.

Visit www.alliedmachine.com for the most up-to-date information and procedures.

Reference Icons
The following icons will appear throughout the catalogue to help you navigate between products.



Setup / Assembly Information
Detailed instructions and information regarding the corresponding part(s)

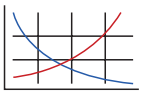

Recommended Cutting Data
Speed and feed recommendations for optimum and safe drilling

Universal Versatile Boring Heads Table of Contents

Introduction

UPA Product Overview . . . . . 2 - 3

UPA 3 Boring System

UPA 3 Boring Head and Accessories . . . . . 4 - 5

UPA 3 Shanks . . . . . 6 - 7

UPA 4 and 5s6 Boring System

UPA 4 Boring Head and Accessories . . . . . 8 - 9

UPA 5-S 6 Boring Heads and Accessories . . . . . 10 - 11

UPA 4 and 5-S 6 Shanks 12

Technical Information and Chip Production Values 13

UPA Boring System Diagram . . . . . 14 - 15

Series	Diameter Range Metric (mm)
UPA 3	0.00 - 260.00
UPA 4	0.00 - 400.00
UPA 5-S 6	0.00 - 620.00



UPA Boring Head
FACING AND BORING

Universal Facing and Boring Heads

The versatile Wohlhaupter UPA boring heads can be used for facing, boring, and taper turning. They can also be used for right- or left-handed turning.

Precise and ***versatile*** boring heads.

- Diameter range: 0.00 mm - 620.00 mm
- Slide adjustment up to 112.00 mm
- Can be used in a variety of operations

UNIVERSAL
FACING AND BORING *Applications*

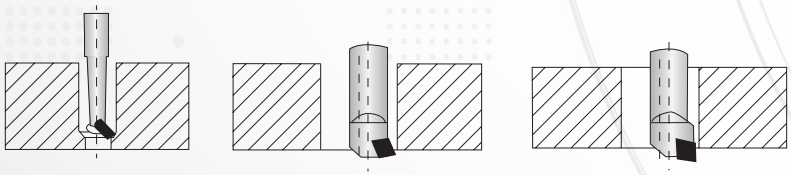

Boring with different tools

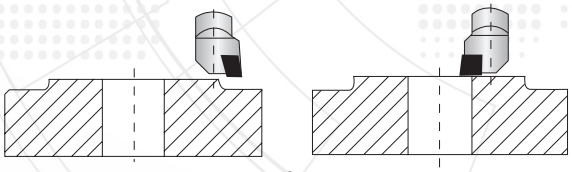

Facing

From inside outward

From outside inward

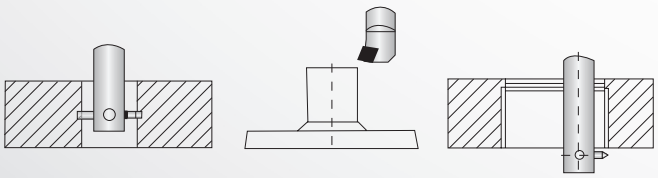

Recessing

Outside Turning

Thread Cutting

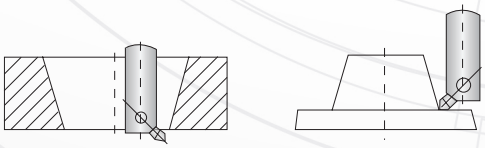

Taper Turning

UNIVERSAL

FACING & BORING *Application Examples*

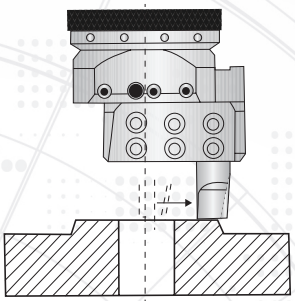

Facing with boring bar directly in slide

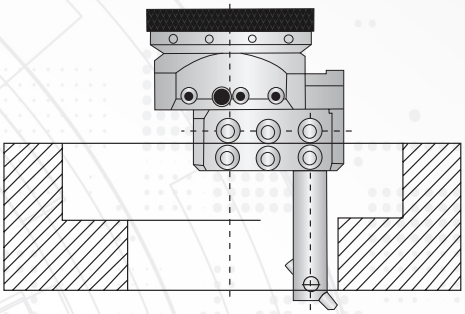

Boring with long boring bar

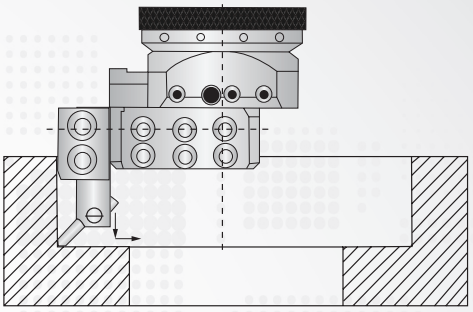

Boring and facing with short boring bar holder and a boring bar

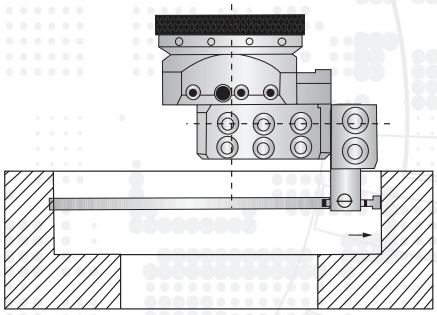

Recessing with short boring bar holder and a boring bar

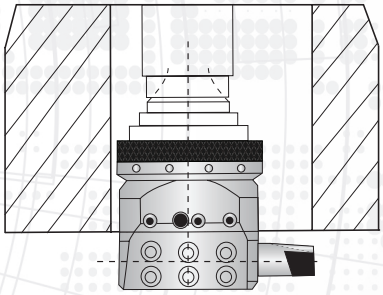

Deep hole boring with boring bar directly in slide

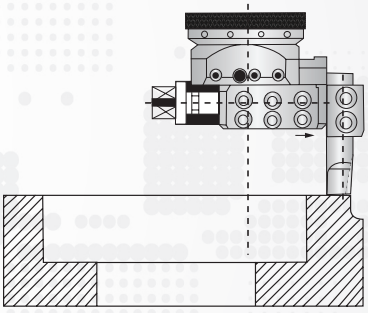

Large diameter facing with a long boring bar holder

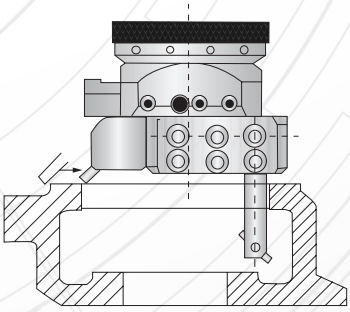

Facing in two areas with one boring bar and a boring bar holder

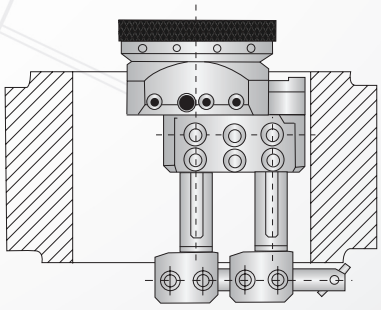

Facing the reverse side by using boring bar holders contained in attachment

UPA 3 Boring Head and Accessories

Diameter Range: 0.00 mm - 260.00 mm

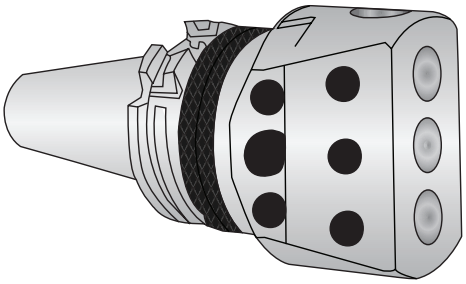

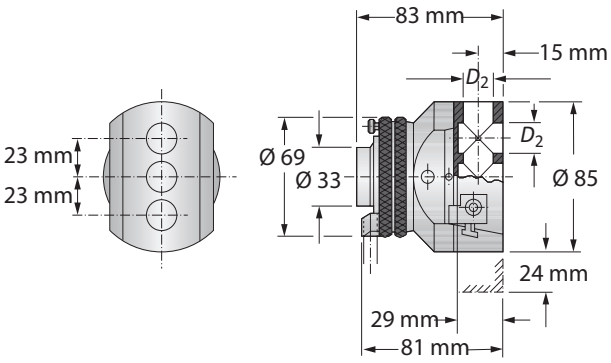

UPA 3 Boring Head

	Boring Range	Boring Head D_2	Weight	Part No.
m	0.00 - 260.00	18.00	2.10 (kg)	**005020**

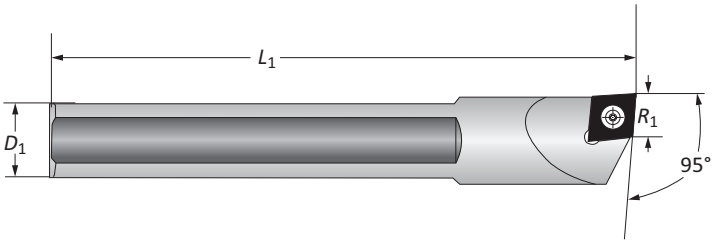

UPA 3 Boring Bars

	Boring Bar D_1	L_1	R_1	Weight	Cutting Direction	Insert Form	Part No.
m	18.00	80.00	13.50	0.10 (kg)	R	103	**081087**
	18.00	80.00	13.50	0.10 (kg)	L	103	**218088**

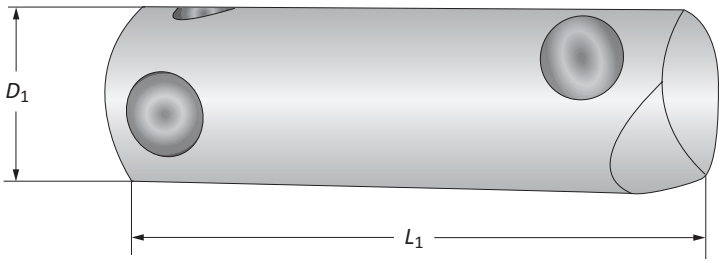

UPA 3 Boring Bars

	Boring Bar D_1	L_1	Boring Depth	Designation	Part No.
	18.00	60.00	30.00	B 306	**073003**
m	18.00	90.00	60.00	B 309	**073004**
	18.00	120.00	90.00	B 312	**073005**

B10-M: 12-13
Key on B10-I: 1
B10: VI-VII

m = Metric (mm)

UPA 3 Accessories

Reducing Sleeves | Boring Bar Holders

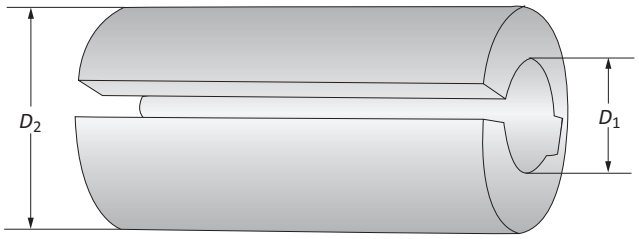

UPA 3 Reducing Sleeves

	Reducing Sleeve D_2	Reducing Sleeve D_1	Weight	Part No.
	18.00	8.00	0.10 (kg)	**071103**
Ⓜ	18.00	10.00	0.10 (kg)	**071104**
	18.00	12.00	0.10 (kg)	**071105**
	18.00	14.00	0.10 (kg)	**071106**

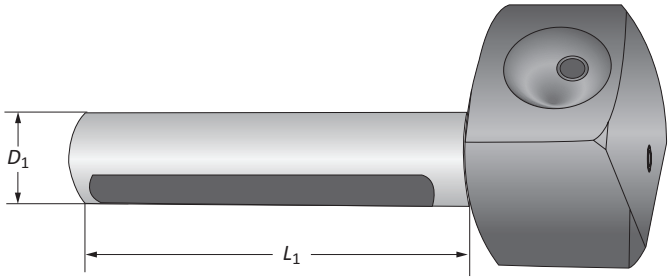

UPA 3 Boring Bar Holders

	Boring Bar Holder D_1	Boring Bar Holder L_1	Working Diameter Range	Designation	Part No.
Ⓜ	18.00	82.00	85.00 - 190.00	BH 308	**075001**
	18.00	120.00	160.00 - 260.00	BH 312	**075002**

UPA 3 Square Turning Bit

	Square Turning Bit S	Square Turning Bit L_1	Weight	Part No.
Ⓜ	6.00	40.00	11 (g)	**089001**

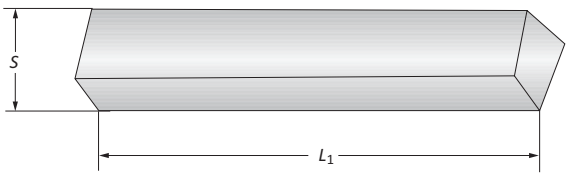

B10-M: 12-13

Key on B10-I: 1

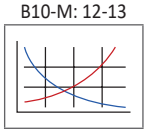

B10: VI-VII

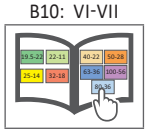

Ⓜ = Metric (mm)

UPA 3 Master Shanks

CAT 40/50 | Morse Taper

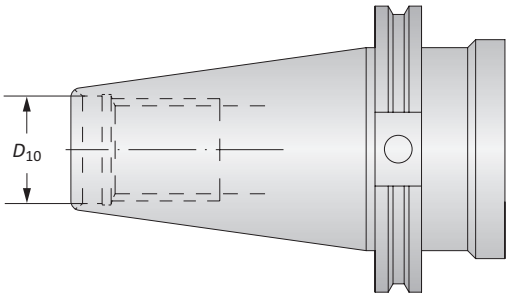

CAT 40/50 Shanks

	Shank			
	Style	D_{10}	Weight	Part No.
ⓜ	CAT 40	M16 x 2	1.06 (kg)	**130001T016960**
	CAT 50	M24 x 3	3.20 (kg)	**130001T016962**

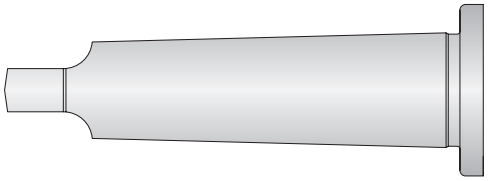

Morse Taper Shanks

	Shank		
	Style	Weight	Part No.
ⓜ	MT 3	0.30 (kg)	**130001T004509**
	MT 4	0.55 (kg)	**130001T003590**
	MT 5	1.35 (kg)	**130001T003920**

B10-M: 12-13
Key on B10-I: 1
B10: VI-VII

ⓜ = Metric (mm)

UPA 3 Master Shanks

R-8 | NMTB 40/50

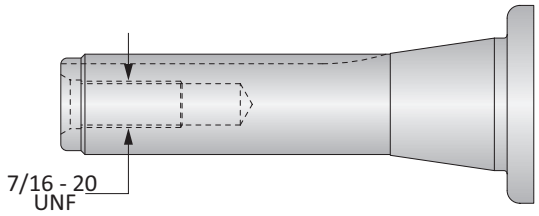

R-8 Shanks

	Shank Weight	Part No.
ⓜ	0.48 (kg)	**130001T007166**

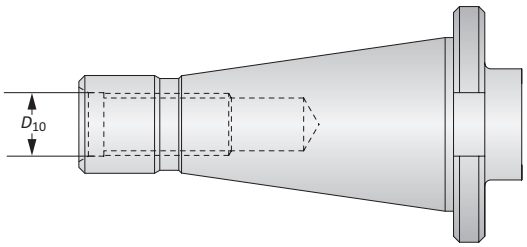

NMTB 40/50 Shanks

	Shank Style	D_{10}	Weight	Part No.
ⓜ	NMTB40	⅝ - 11	0.90 (kg)	**130001T004498**
	NMTB50	1 - 8	2.63 (kg)	**130001T004480**

Differential Screw

	Thread	Weight	Part No.
ⓜ	M16 x 2	0.03 (kg)	**KW9208**

B10-M: 12-13

Key on B10-I: 1

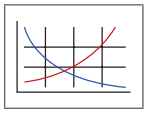

B10: VI-VII

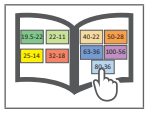

ⓜ = Metric (mm)

UPA 4 Boring Heads and Accessories

Diameter Range: 0.000" - 15.748" (0.00 mm - 400.00 mm)

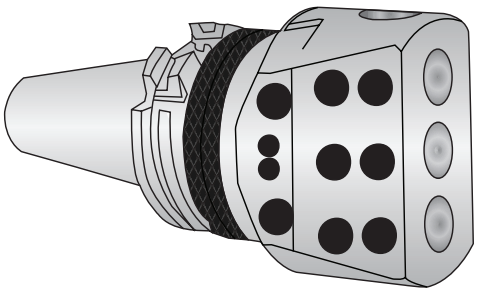

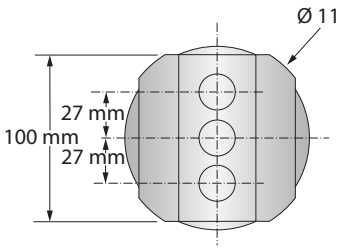

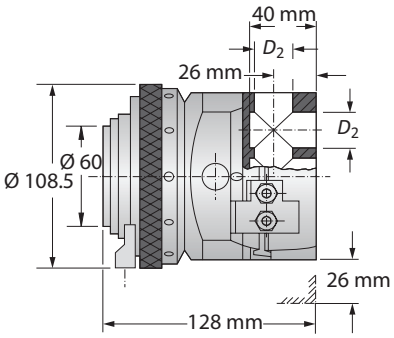

UPA 4 Boring Heads

	Boring Range	Boring Head D_2	Weight	Part No.
m	0.00 - 400.00	22.00	6.50 (kg)	**007020**

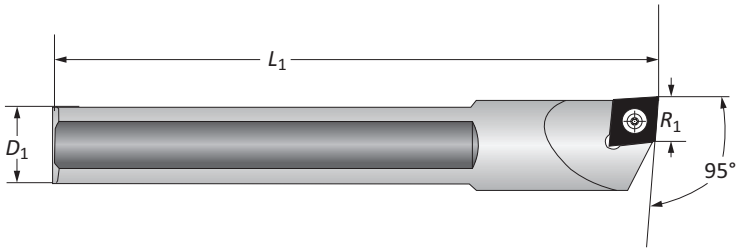

UPA 4 Boring Bars

	Boring Bar D_1	L_1	R_1	Weight	Cutting Direction	Insert Form	Part No.
m	22.00	100.00	13.50	0.10 (kg)	R	103	**081092**
	22.00	100.00	13.50	0.10 (kg)	L	103	**218089**

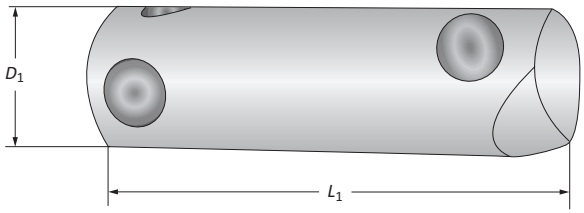

UPA 4 Boring Bars

	Boring Bar D_1	L_1	Boring Depth	Designation	Part No.
	22.00	85.00	45.00	B 408	**073006**
m	22.00	125.00	85.00	B 412	**073007**
	22.00	165.00	125.00	B 416	**073008**

B10-M: 12-13
Key on B10-I: 1
B10: VI-VII

m = Metric (mm)

UPA 4 Accessories

Reducing Sleeves | Boring Bar Holders

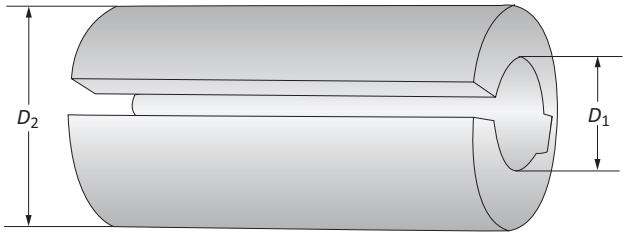

UPA 4 Reducing Sleeves

	Reducing Sleeve			
	D_2	D_1	Weight	Part No.
	22.00	8.00	0.10 (kg)	**071107**
	22.00	10.00	0.10 (kg)	**071108**
Ⓜ	22.00	12.00	0.10 (kg)	**071109**
	22.00	14.00	0.08 (kg)	**071110**
	22.00	18.00	0.08 (kg)	**071111**

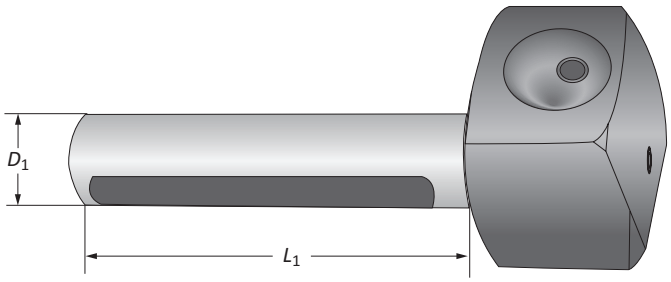

UPA 4 Boring Bar Holders

	Boring Bar Holder				
	D_1	L_1	Designation	Working Diameter Range	Part No.
Ⓜ	22.00	98.00	BH 410	115.00 - 240.00	**075003**
	22.00	180.00	BH 418	220.00 - 400.00	**075004**

UPA 4 Square Turning Bit

	Square Turning Bit			
	S	L_1	Weight	Part No.
Ⓜ	6.00	40.00	11 (g)	**089001**

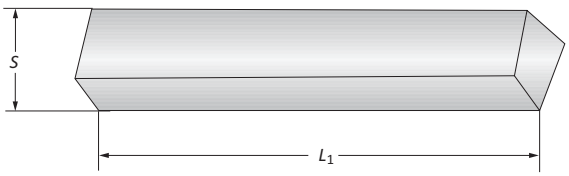

B10-M: 12-13

Key on B10-I: 1

B10: VI-VII

Ⓜ = Metric (mm)

UPA 5-S 6 Boring Heads and Accessories

Diameter Range: 0.00 mm - 620.00 mm

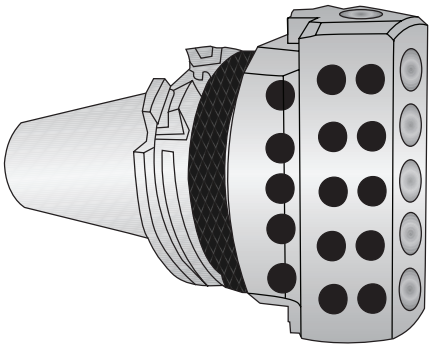

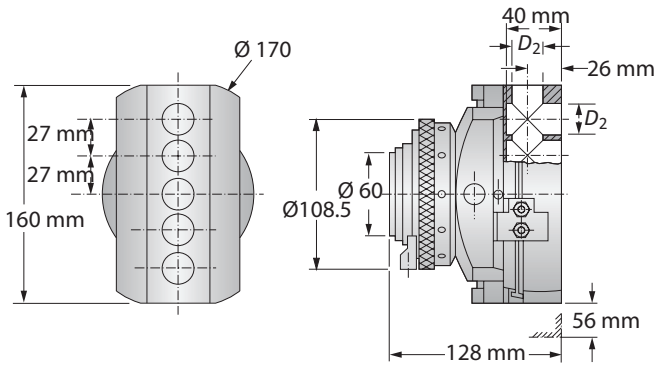

UPA 5-S 6 Boring Heads

	Boring Range	Boring Head D_2	Weight	Part No.
m	0.00 - 620.00	22.00	7.90 (kg)	**013020**

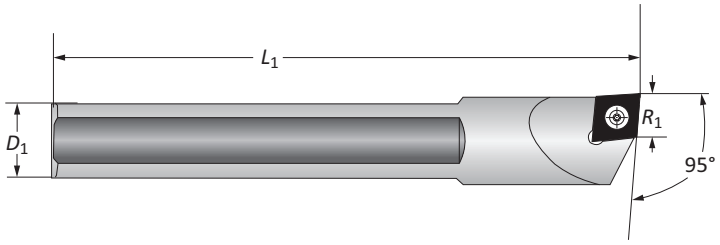

UPA 5-S 6 Boring Bars

	Boring Bar D_1	L_1	R_1	Weight	Cutting Direction	Insert Form	Part No.
m	22.00	100.00	13.50	0.10 (kg)	R	103	**081092**
	22.00	100.00	13.50	0.10 (kg)	L	103	**218089**

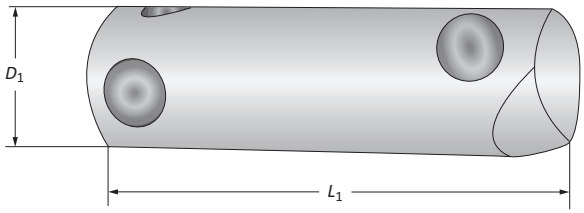

UPA 5-S 6 Boring Bars

	Boring Bar D_1	L_1	Boring Depth	Designation	Part No.
	22.00	85.00	45.00	B 408	**073006**
m	22.00	125.00	85.00	B 412	**073007**
	22.00	165.00	125.00	B 416	**073008**

B10-M: 12-13
Key on B10-I: 1
B10: VI-VII

m = Metric (mm)

UPA 5-S 6 Accessories

Reducing Sleeves | Boring Bar Holders

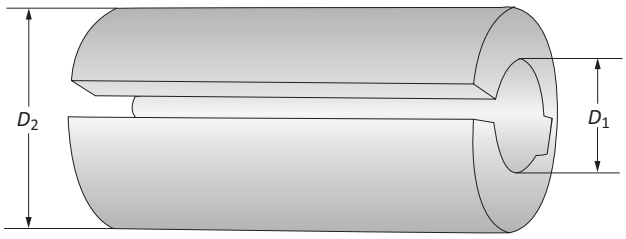

UPA 5-S 6 Reducing Sleeves

	Reducing Sleeve			
	D_2	D_1	Weight	Part No.
	22.00	8.00	0.10 (kg)	**071107**
	22.00	10.00	0.10 (kg)	**071108**
Ⓜ	22.00	12.00	0.10 (kg)	**071109**
	22.00	14.00	0.08 (kg)	**071110**
	22.00	18.00	0.08 (kg)	**071111**

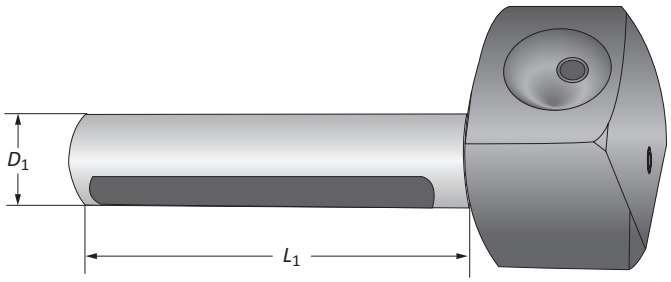

UPA 5-S 6 Boring Bar Holders

	Boring Bar Holder				
	D_1	L_1	Designation	Working Diameter Range	Part No.
Ⓜ	22.00	228.00	BH 513	120.00 - 400.00	**075003**
	22.00	230.00	BH 523	270.00 - 620.00	**075004**

UPA 5-S 6 Square Turning Bit

	Square Turning Bit			
	S	L_1	Weight	Part No.
Ⓜ	6.00	40.00	11 (g)	**089001**

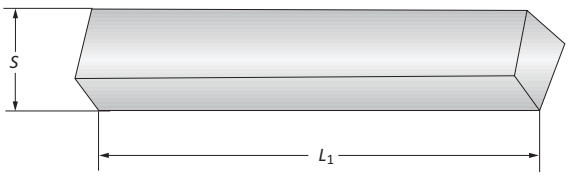

B10-M: 12-13
Key on B10-I: 1
B10: VI-VII

Ⓜ = Metric (mm)

UPA 4 and 5-S 6 Master Shanks

CAT 40/50 | Morse Taper | NMTB 40/50

CAT 40/50 Shanks

	Shank			
	Style	D_{10}	Weight	Part No.
ⓜ	CAT 40	M16 x 2	1.45 (kg)	**130005T016960**
	CAT 50	M24 x 3	3.20 (kg)	**130005T016962**

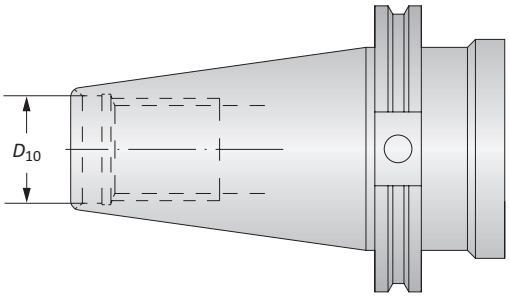

Morse Taper Shanks

	Shank		
	Style	Weight	Part No.
ⓜ	MT 4	0.86 (kg)	**130005T003590**
	MT 5	1.65 (kg)	**130005T003920**

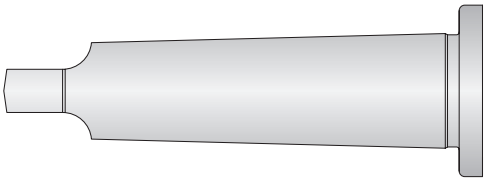

NMTB 40/50 Shanks

	Shank			
	Style	D_{10}	Weight	Part No.
ⓜ	NMTB40	⅝ - 11	1.30 (kg)	**130005T004498**
	NMTB50	1 - 8	2.90 (kg)	**130005T004480**

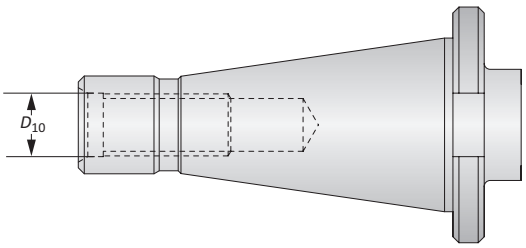

Differential Screw

	Thread	Weight	Part No.
ⓜ	M20 x 2.5	0.07 (kg)	**KW9209**

B10-M: 12-13
Key on B10-i: 1
B10: VI-VII

ⓜ = Metric (mm)

Technical Information | Chip Production Values

Technical Data

	Type	UPA 3	UPA 4	UPA 5-S 6
	Working accuracy	±0.005	±0.005	±0.005
	Diameter range	25.00	35.00	45.00
	MT shank	3.00	4.00	5.00
	ISO shank	30.00	40.00	40.00
	Facing and boring range	0.00 - 260.00	0.00 - 400.00	0.00 - 620.00
	Adjustment of slide (max)	48.00	52.00	112.00
	Self-activated feed of slide per revolution	0.05	0.02, 0.04, 0.06, 0.08, 0.10, 0.12, 0.14, 0.16, 0.18, 0.20, 0.22, 0.24	0.02, 0.04, 0.06, 0.08, 0.10, 0.12, 0.14, 0.16, 0.18, 0.20, 0.22, 0.24
m	Fine adjustment of one division	0.01	0.01	0.01
	Fine adjustment of one revolution	1.00	0.40	0.40
	Rapid return per revolution	1.00	–	–
	Rapid return setting per revolution	–	6.00	6.00
	Largest diameter of slide	85.00	115.00	170.00
	Height of boring head without shank	81.00	128.00	128.00
	Tool locations in slide	18.00	22.00	22.00
	Max permissible revolutions	1000	600	600
	End cut off accuracy	±0.05	±0.05	±0.05

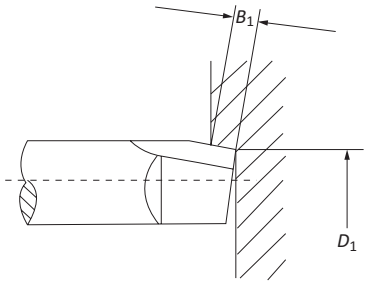

Chip Production Values

	Chip Cutting Guide	Type	UPA 3	UPA 4	UPA 5-S 6
	Max load	kW	2.50	7.00	9.50
	With slide feed	mm/rev.	0.050	0.08, 0.12, 0.24	0.08, 0.12, 0.24
	For smaller working Ø	D_1	60.00	150.00	200.00
m	Maximum width of chip	B_1	4.00	7.00, 6.00, 4.00	8.00, 7.00, 5.00
	Maximum working Ø	D_1	260.00	400.00	500.00 / 620.00
	Max width of clip without reinforcement rings	B_1	2.00	2.20, 2.00, 1.50	2.50, 2.00, 1.50
	Max width of clip with reinforcement rings*	B_1	–	4.50, 4.00, 3.00	5.00, 4.00, 3.00

*By using the reinforcement rings contained in the normal attachment, chip cutting capacity is increased by 100%

B10-M: 12-13
Key on B10-I: 1
B10: VI-VII

m = Metric (mm)

UPA 3 Boring Head Diagram

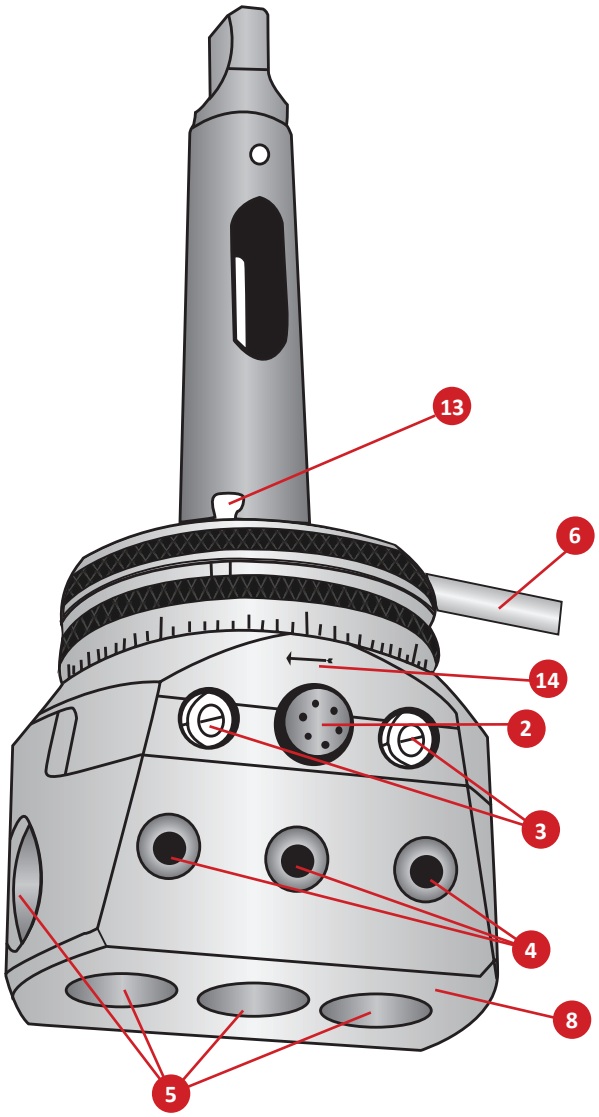

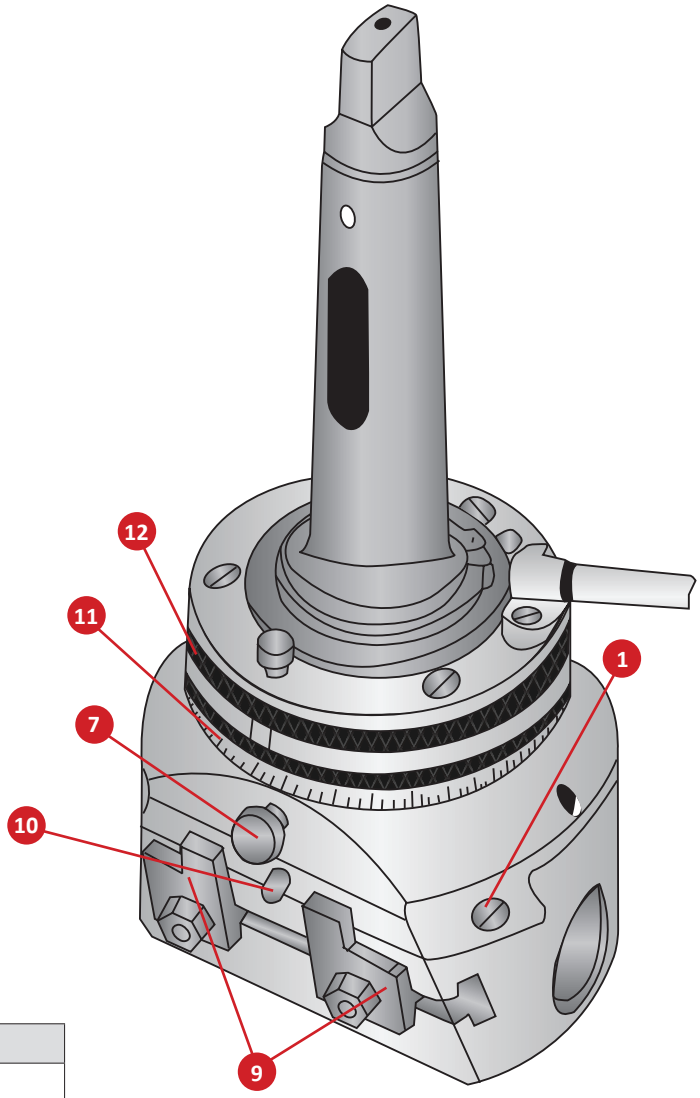

No.	Part	No.	Part
1	Regulating screw	8	Slide
2	Locking screw	9	Stop
3	Setting screws	10	Fixed pin
4	Fastening screw	11	Scale ring
5	Tool post holes	12	Holding ring
6	Holding rod	13	Button for return movement
7	Feed button	14	Arrow

B10-M: 12-13

Key on B10-I: 1

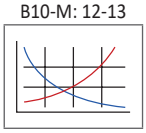

B10: VI-VII

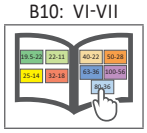

m = Metric (mm)

UPA 4 / 5-S 6 Boring Heads Diagram

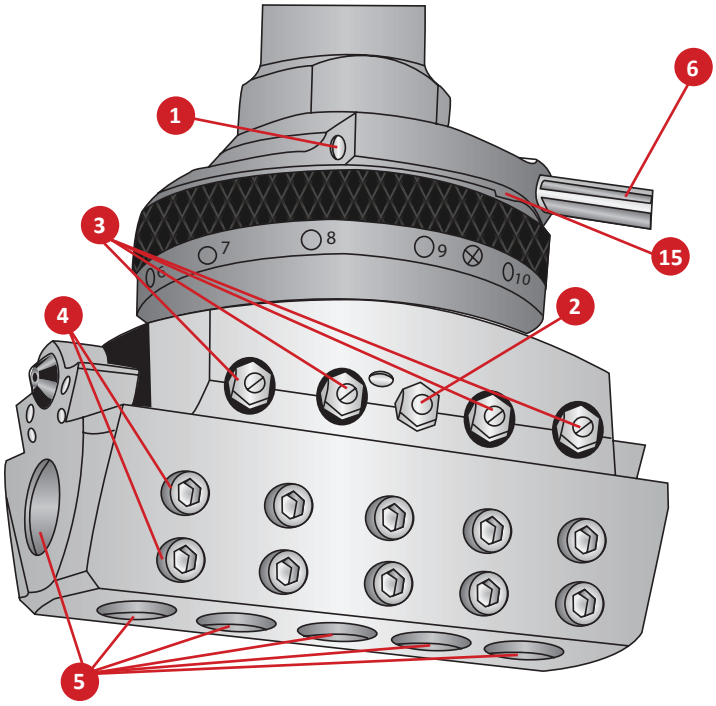

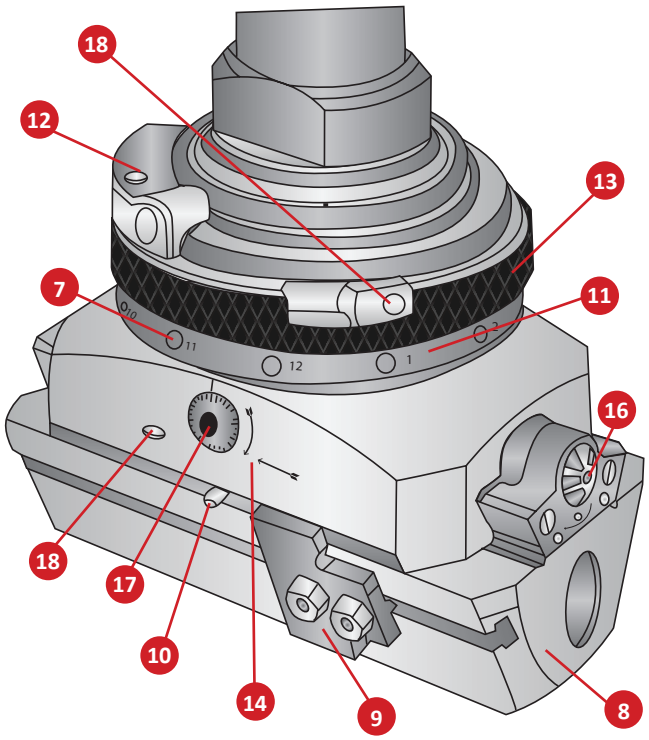

No.	Part	No.	Part
1	Regulating screw	10	Fixed pin
2	Locking screw	11	Scale ring
3	Setting screws	12	Retaining ring
4	Fastening screws	13	Feed ring
5	Tool post holes	14	Arrow
6	Holding rod	15	Recess
7	Feed buttons	16	Quick setting dial
8	Slide with rotation bores	17	Fine setting dial
9	Stop	18	Release ring

B10-M: 12-13

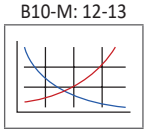

Key on B10-I: 1

B10: VI-VII

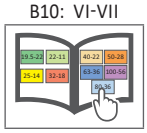

SECTION

B10-K

Special Boring Solutions

Wohlhaupter® Special Boring Solutions



Special Design Tooling

When it comes to special solutions for customers, Wohlhaupter has unique capabilities to effectively design and develop special boring tools. Our special boring tools are designed for specific machines, processes, and materials to help you save time and money.

If you have a particularly unique or difficult application, contact our Application Engineering team.
email: **engineering.eu@alliedmachine.com**

Applicable Industries

Aerospace | Agriculture | Automotive | Firearms | General Machining | Oil & Gas | Renewable Energy

Your safety and the safety of others is very important. This catalogue contains important safety messages. Always read and follow all safety precautions.

This triangle is a safety hazard symbol. It alerts you to potential safety hazards that can cause tool failure and serious injury.

When you see this symbol in the catalogue, look for a related safety message that may be near this triangle or referred to in the nearby text.

There are safety signal words also used in the catalogue. Safety messages follow these words.

⚠ WARNING

WARNING (shown above) means that failure to follow the precautions in this message could result in tool failure and serious injury.

NOTICE means that failure to follow the precautions in this message could result in damage to the tool or machine but not result in personal injury.

NOTE and **IMPORTANT** are also used. These are important that you read and follow but are not safety-related.

Visit www.alliedmachine.com for the most up-to-date information and procedures.

Wohlhaupter® Special Boring Solutions Table of Contents

Special Tooling Solutions

ES-Bore Fine Boring Lay Down Cartridge 2

EK Groover | Lay Down Cartridge 3

Anti-Vibration | Multistep Boring Tool 4

OD Turning Tool | Padded Line Boring Tool 5

3E^{TECH+} Special Tools 6

DigiBore Special Boring Tools 7

Combi-Line Special Boring Tool 8

Online Tools 9

ES-Bore Fine Boring Lay Down Cartridge

DIGITAL ES-BORE WITH ADAPTER PLATE





NOTE: ES-Bore digital fine boring cartridges must be used with the new **3E**$^{TECH+}$ and adapter plate. The ES-Bore cannot be used with 3E^{TECH}.

NOTE: 3E^{TECH+} adjustment accuracy of 0.001 mm on diameter

ANALOG ES-BORE

LAY DOWN CARTRIDGES

ES-BORE

- Mounts to custom designed boring tools
- Available with digital 3E^{TECH+} or analog adjustment
- Accurate adjustments with easy-to-use settings
- Versatility in many different application types over 1.102" (28.00 mm)



GROOVING TOOLS

EK GROOVER

- Create complex grooves faster and deeper than ever before
- Eliminate chatter in hard-to-reach internal forms
- The electronically-controlled insert release can be adapted to most machine tools
- Single or double grooving in one operation

ROUGH BORING TOOLS

LAY DOWN CARTRIDGE

- Increase the productivity of your roughing tool while protecting your investment
- If the tool is ever damaged, simply replace a cartridge and resume making chips





SPECIAL BORING TOOLS

ANTI-VIBRATION

- Vibration dampening rings
- Optimized tool weight
- Used to reduce harmonic vibration in deeper boring applications

SPECIAL BORING TOOLS

MULTISTEP BORING TOOL

- Fine adjustment tool for reverse machining
- Combined with multidiameter fine adjustable cartridges for finish machining



SPECIAL BORING TOOLS

OD TURNING TOOLS

- Multistep OD turning
- Drastically reduce cycle time
- Improve surface finish and feature concentricity

SPECIAL BORING TOOLS

PADDED TOOLING

- Aids in stable part processing
- Expands length to diameter capabilities
- Improves surface finish
- Pads are replaceable to extend tool life



NOTE: 3E^{TECH+} adjustment accuracy of 0.001 mm on diameter



NOTE: 3E^{TECH+} adjustment accuracy of 0.001 mm on diameter

3E^{TECH+} BORING TOOL

MULTISTEP BORING TOOL

- Easy diameter adjustments with 3E^{TECH+}
- One digital readout module to use on all steps

3E^{TECH+} BORING TOOL

LINE BORING TOOL

- One digital readout module used on all steps
- Easy diameter adjustment at the machine spindle

DigiBore Special Boring Tools



NOTE: Metric item pictured

NOTE: Digital adjustment accuracy of 0.002 mm on diameter



NOTE: Metric item pictured

NOTE: Digital adjustment accuracy of 0.002 mm on diameter

FINISH BORING TOOLS

DIGIBORE WITH 249 (248)

- Standard DigiBore head, standard 249 (248) head, and special slide for precise two-step bore
- MVS connection

FINISH BORING TOOLS

DIGIBORE SPECIAL

- Standard DigiBore boring head with OD turn and OD chamfer insert holder
- MVS connection

Combi-Line Special Boring Tool



ROUGH, FINISH, and CHAMFER BORING TOOLS

COMBI-LINE

- Standard Combi-Line tooling with added chamfer cartridge
- MVS connection

www.alliedmachine.com | +44 (0) 1384 400 900 | enquiries.eu@alliedmachine.com

Online Tools

ToolMD® | Wohlhaupter® Boring Insert Selector

ToolMD®

www.toolmd.com

Design Your Own Solutions

ToolMD is a configurator for Wohlhaupter modular tooling systems that allows customers to virtually build their own solution. This online-based simulator puts the entire Wohlhaupter product line at your fingertips. It provides a digital bank of every individual part that Wohlhaupter manufactures in either inch or metric.

Once you select a component, you will be guided by a series of user-friendly prompts to select the next components until you have built your tooling system. Throughout the process, you can monitor the size of your custom tool and ensure what you're building matches your real-life specifications. Once a complete system is virtually assembled, the program will render the tool in either a 2D or 3D drawing to view on your device.

Designing your tools with ToolMD saves you time and allows you to instantly obtain the right tool for the job.

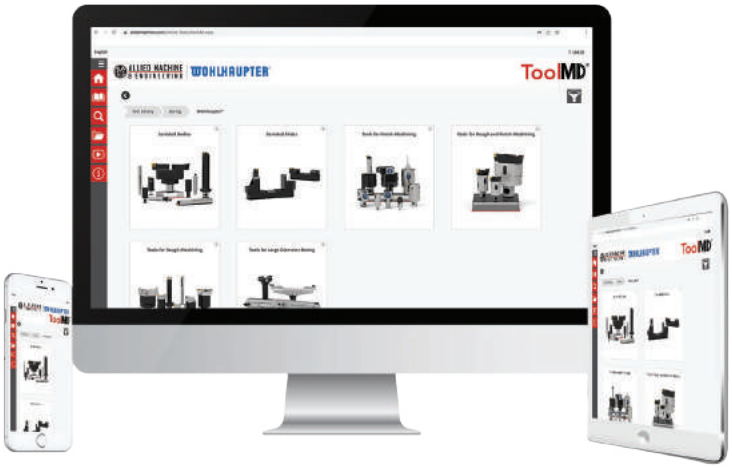

Design anytime from anywhere.
Available online 24/7.

WOHLHAUPTER® | Boring Insert Selector

www.alliedmachine.com/bis

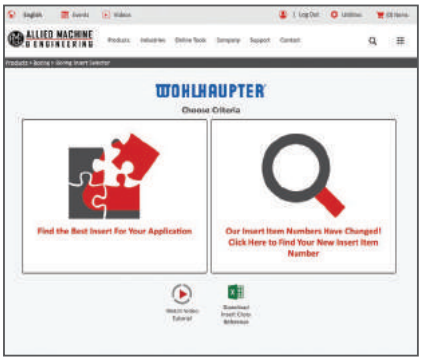

- Generate the correct boring insert for your application in just six easy steps

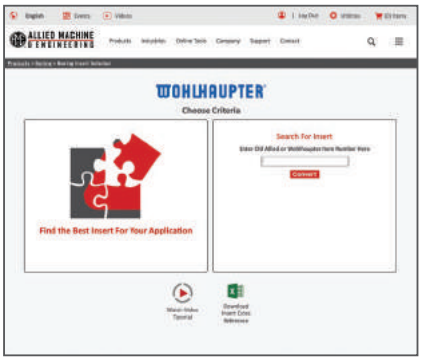

- Search for your new insert item number by entering your old item number

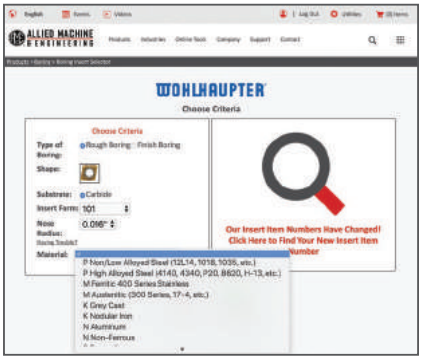

- Choose type, shape, substrate, insert form, nose radius, and workpiece material
- Order easily by adding the item to your cart

SECTION

B10-L

Lay Down Cartridges

Wohlhaupter® Lay Down Cartridges

Holders for Pre-Machining | Holders for Compact Boring Bars | Short Clamp Holders | Fine Boring Holders

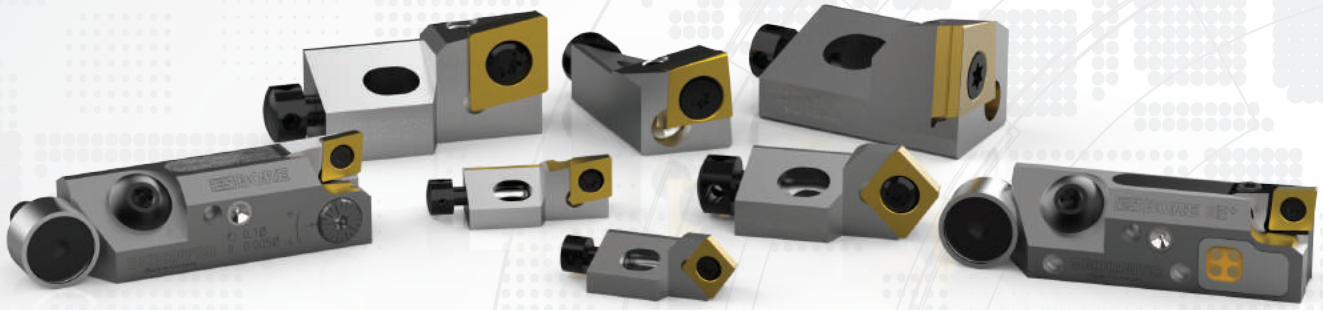

Robust. Powerful. Versatile. Engineered Solutions.

From pre-machining holes with heavy stock removal to finish machining with tight tolerances and excellent surface finish, Wohlhaupter's extensive range of lay down cartridges can help you achieve specific boring solutions. Wohlhaupter's lay down cartridges bring innovative concepts designed to improve productivity, reduce scrap, and reduce the cost per part.

Your safety and the safety of others is very important. This catalogue contains important safety messages. Always read and follow all safety precautions.



This triangle is a safety hazard symbol. It alerts you to potential safety hazards that can cause tool failure and serious injury.

When you see this symbol in the catalogue, look for a related safety message that may be near this triangle or referred to in the nearby text.

There are safety signal words also used in the catalogue. Safety messages follow these words.

⚠ WARNING

WARNING (shown above) means that failure to follow the precautions in this message could result in tool failure and serious injury.

NOTICE means that failure to follow the precautions in this message could result in damage to the tool or machine but not result in personal injury.

NOTE and **IMPORTANT** are also used. These are important that you read and follow but are not safety-related.

Visit www.alliedmachine.com for the most up-to-date information and procedures.

Applicable Industries

Aerospace | Agriculture | Automotive | Firearms | General Machining | Oil & Gas | Renewable Energy

Reference Icons
The following icons will appear throughout the catalogue to help you navigate between products.

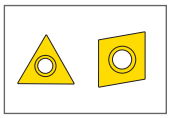

Inserts
For use with insert holder boring heads and boring bars using indexable inserts

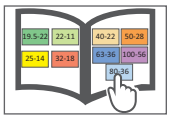

MVS Connection Color Guide
Detailed instructions and information regarding the MVS connection(s)

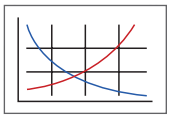

Recommended Cutting Data
Speed and feed recommendations for optimum and safe boring

Lay Down Cartridges Table of Contents

ES-Bore Lay Down Cartridges

Digital 3E[TECH+] Insert Forms 101 and 20 2
Analogue Insert Forms 101 and 20 3
Mounting Dimensions 4
Accessories 5

Compact Lay Down Cartridges

Insert Forms 101, 103, 104 and 105 6
Insert Form 112 7
Insert Forms 04 and 05 8
Mounting Dimensions 9
Accessories 10

ES-Bore Digital 3E^{TECH+} Fine Boring Cartridges | Insert Forms 101 and 20

Diameter Range: ≥1.102" (28.00 mm)



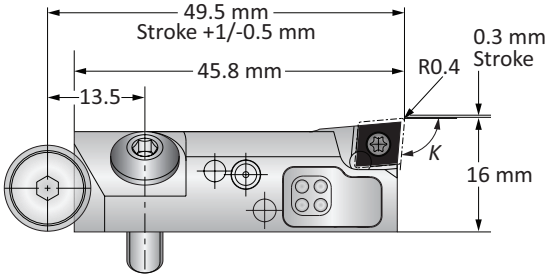

	Holder Type	K	ISO	Minimum Boring Diameter	Cutting Direction	Insert Form	Weight	Part No.
ⓜ	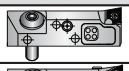	90°	CC.. 0602..	28.00	Right	101	0.06 (kg)	**345032**
		90°	CC.. 0602..	28.00	Left	101	0.06 (kg)	**345033**
	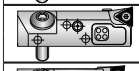	90°	TOGX 0802..	28.00	Right	20	0.06 (kg)	**345042**
		90°	TOGX 0802..	28.00	Left	20	0.06 (kg)	**345043**
	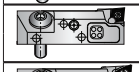	95°	CC.. 0602..	28.00	Right	101	0.06 (kg)	**345030**
		95°	CC.. 0602..	28.00	Left	101	0.06 (kg)	**345031**
	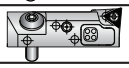	95°	TOGX 0802..	28.00	Right	20	0.06 (kg)	**345040**
		95°	TOGX 0802..	28.00	Left	20	0.06 (kg)	**345041**

NOTE: ES-Bore digital fine boring cartridges must be used with the new 3E^{TECH+} and adapter plate. The ES-Bore cannot be used with 3E^{TECH}.
NOTE: 3E^{TECH+} module, adapter, and charging unit sold separately.

3E^{TECH+} Digital Readout Module

Part No.	Charging Unit*
536015	**536016**

NOTE: WEEE-Reg.-Nr. DE 15820388
*Charging unit sold separately



NOTE: 3E^{TECH+} adjustment accuracy of 0.001 mm on diameter

Adapter Plate for 3E^{TECH+}

Cutting Direction	Part No.
Right	**536017**
Left	**536018**

NOTE: Adapter sold separately.



B10-M: 12-13 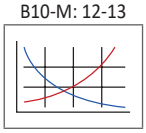
B10-H 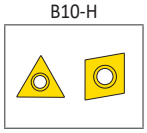
B10: VI-VII 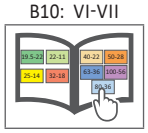
Key on B10-L: 1

ⓜ = Metric (mm)
Inserts sold separately

ES-Bore Analogue Fine Boring Cartridges | Insert Forms 101 and 20

Diameter Range: ≥1.102" (28.00 mm)



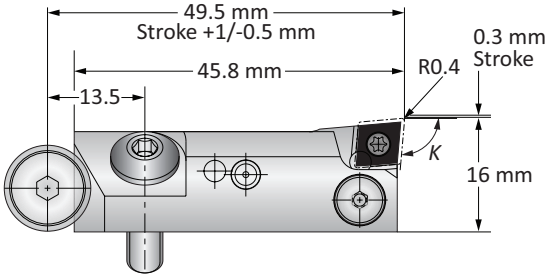

	Holder Type	K	ISO	Minimum Boring Diameter	Cutting Direction	Insert Form	Weight	Part No.
ⓜ	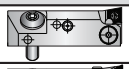	90°	CC.. 0602..	28.00	Right	101	0.06 (kg)	**345036**
		90°	CC.. 0602..	28.00	Left	101	0.06 (kg)	**345037**
	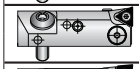	90°	TOGX 0802..	28.00	Right	20	0.06 (kg)	**345046**
		90°	TOGX 0802..	28.00	Left	20	0.06 (kg)	**345047**
		95°	CC.. 0602..	28.00	Right	101	0.06 (kg)	**345034**
		95°	CC.. 0602..	28.00	Left	101	0.06 (kg)	**345035**
	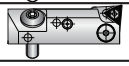	95°	TOGX 0802..	28.00	Right	20	0.06 (kg)	**345044**
		95°	TOGX 0802..	28.00	Left	20	0.06 (kg)	**345045**

B10-M: 12-13
Key on B10-L: 1
B10-H
B10: VI-VII

ⓜ = Metric (mm)
Inserts sold separately

ES-Bore Mounting Dimensions

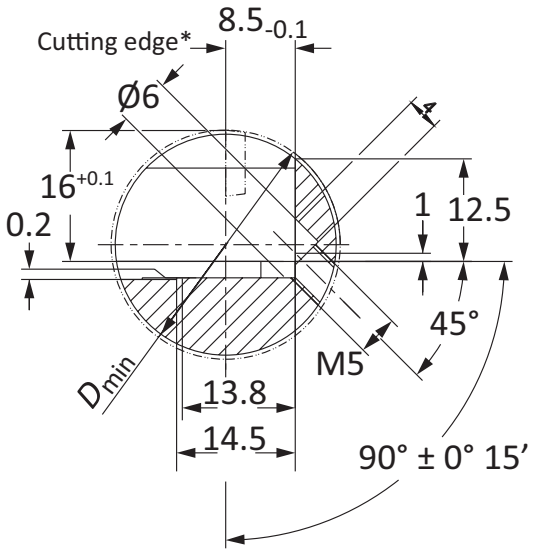

*For $D \leq 32$ mm cutting edge 1 mm before center

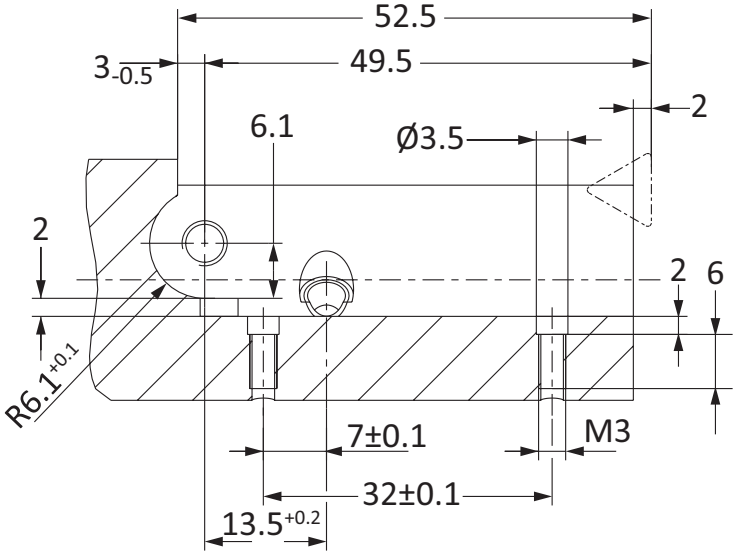

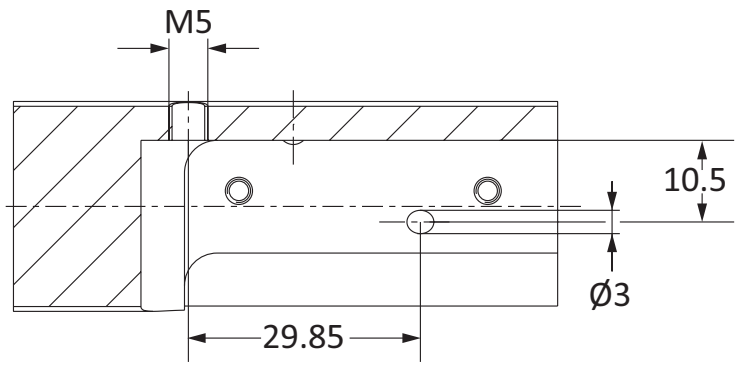

ES-Bore Accessories

Screws | Service Keys | 3E[TECH+] Accessories

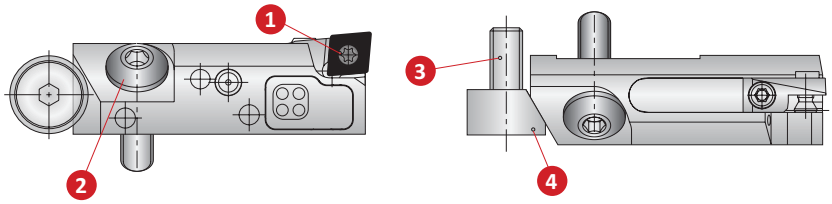

	1 Insert Screw		2 Mounting Screw	3 Height Adjusting Screw	4 Height Adjusting Wedge
	Insert Form 101	Insert Form 20			
Screw	115676 (T8)	115535 (T7)	515632 (s3)	115466 (s3)	415721
Service Key	115590	115591	051110	051110	–

3E[TECH+] Accessories

1 Charging Unit
Part No.
536016

NOTE: Charging unit sold separately from 3E[TECH+]



NOTE: 3E[TECH+] adjustment accuracy of 0.001 mm on diameter

Compact Lay Down Cartridges | Insert Forms 101, 103, 104 & 105

Diameter Range: ≥25.00 mm

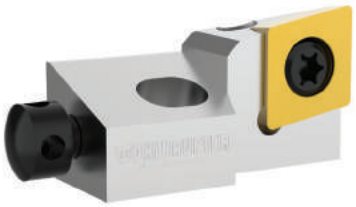

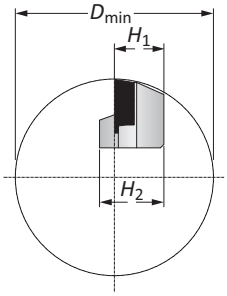

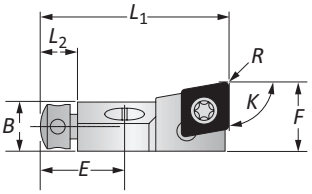

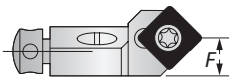

	Holder Type	K	ISO	D_{min} Boring Range	Designation	Insert Holder L_1	L_2	B	H_1	H_2	F	R Radius	E	Insert Form	Part No.
	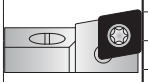	90°	CC..0602..	25.00	SCFCR08CK-06	28.00	6.00	6.50	8.00	10.00	10.00	0.40	13.00	101	**345001**
		90°	CC..09T3..	40.00	SCFCR10CK-09	38.00	7.50	10.00	10.00	13.00	14.00	0.80	17.00	103	**345002**
		90°	CC..1204..	50.00	SCFCR12CK-12	45.00	8.00	14.00	12.00	16.00	20.00	0.80	20.00	104	**345003**
		90°	CC..1605..	55.00	SCFCR14CK-16	54.00	8.00	16.00	14.00	18.00	23.00	0.80	23.50	105	**345004**
	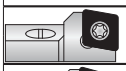	80°	CC..0602..	25.00	SC0CR08CK-06	28.00	6.00	6.50	8.00	10.00	9.00	0.40	13.00	101	**345014**
		80°	CC..09T3..	40.00	SC0CR10CK-09	38.00	7.50	10.00	10.00	13.00	12.50	0.80	17.00	103	**345009**
ⓜ	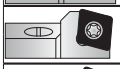	75°	CC..0602..	25.00	SCRCR08CK-06	28.00	6.00	6.50	8.00	10.00	8.50	0.40	13.00	101	**345013**
		75°	CC..09T3..	40.00	SCRCR10CK-09	38.00	7.50	10.00	10.00	13.00	11.70	0.80	17.00	103	**345008**
	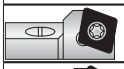	70°	CC..0602..	25.00	SCPCR08CK-06	28.00	6.00	6.50	8.00	10.00	8.00	0.40	13.00	101	**345012**
		70°	CC..09T3..	40.00	SCPCR10CK-09	38.00	7.50	10.00	10.00	13.00	11.00	0.80	17.00	103	**345007**
	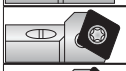	60°	CC..0602..	25.00	SCTCR08CK-06	28.00	6.00	6.50	8.00	10.00	7.00	0.40	13.00	101	**345011**
		60°	CC..09T3..	40.00	SCTCR10CK-09	38.00	7.50	10.00	10.00	13.00	9.70	0.80	17.00	103	**345006**
		45°	CC..0602..	25.00	SCSCR08CK-06	24.00	6.00	6.50	8.00	10.00	10.00	0.40	13.00	101	**345010**
		45°	CC..09T3..	40.00	SCSCR10CK-09	32.00	7.50	10.00	10.00	13.00	14.50	0.80	17.00	103	**345005**

B10-M: 12-13
Key on B10-L: 1

B10-H

B10: VI-VII

ⓜ = Metric (mm)
Inserts sold separately

www.alliedmachine.com | +44 (0) 1384 400 900 | enquiries.eu@alliedmachine.com

Compact Lay Down Cartridges | Insert Form 112

Diameter Range: ≥40.00 mm

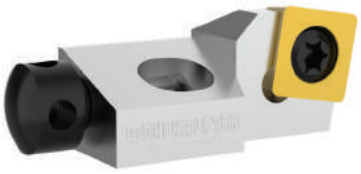

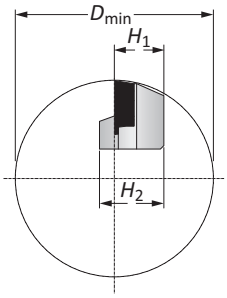

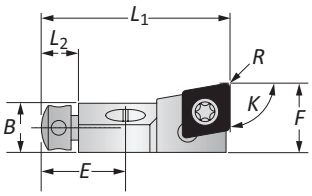

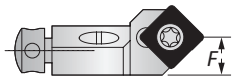

	Holder Type	K	ISO	D_{min} Boring Range	Designation	Insert Holder L_1	L_2	B	H_1	H_2	F	R Radius	E	Insert Form	Part No.
	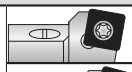	80°	SC..09T3..	40.00	SS0CR10CK-09	38.00	7.50	10.00	10.00	13.00	12.50	0.80	17.00	112	**345019**
	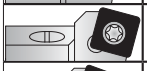	75°	SC..09T3..	40.00	SSRCR10CK-09	38.00	7.50	10.00	10.00	13.00	11.70	0.80	17.00	112	**345018**
Ⓜ		70°	SC..09T3..	40.00	SSPCR10CK-09	38.00	7.50	10.00	10.00	13.00	11.00	0.80	17.00	112	**345017**
		60°	SC..09T3..	40.00	SSTCR10CK-09	38.00	7.50	10.00	10.00	13.00	9.70	0.80	17.00	112	**345016**
		45°	SC..09T3..	40.00	SSSCR10CK-09	32.00	7.50	10.00	10.00	13.00	14.00	0.80	17.00	112	**345015**

B10-M: 12-13
Key on B10-L: 1
B10-H
B10: VI-VII

Ⓜ = Metric (mm)
Inserts sold separately

Tangential Compact Lay Down Cartridges | Insert Forms 04 & 05

Diameter Range: ≥2.125" (54.00 mm)

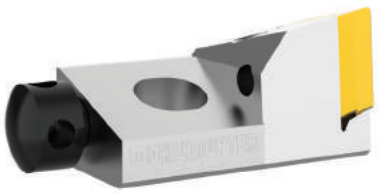

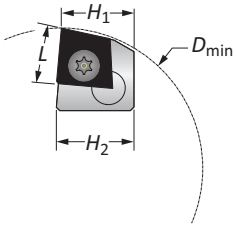

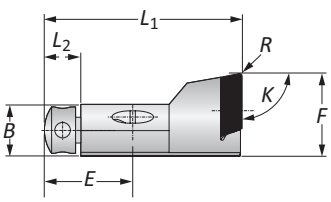

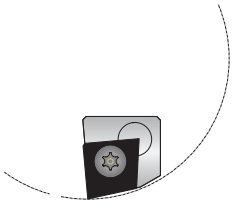

Insert Form 04, 05 Insert Holders

Holder Type	K	D_{min} Boring Range	Insert Holder L_1	L_2	B	H_1	H_2	F	R Radius	E	Holder Cutting Form	L	Insert Form	Part No.
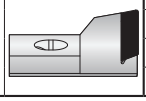	90°	54.00	38.00	7.50	10.00	14.00	15.00	16.00	0.50	17.00	Right	10.50	04	**345023**
	90°	54.00	38.00	7.50	10.00	14.00	15.00	16.00	0.50	17.00	Left	10.50	04	**345025**
	90°	70.00	45.00	8.00	14.00	19.00	20.00	22.00	0.50	20.00	Right	14.50	05	**345020**
	90°	70.00	45.00	8.00	14.00	19.00	20.00	22.00	0.50	20.00	Left	14.50	05	**345022**



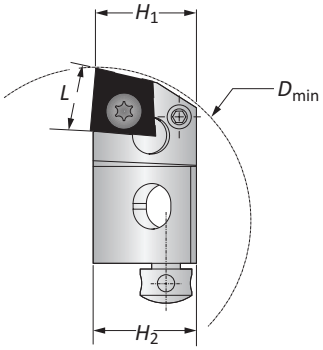

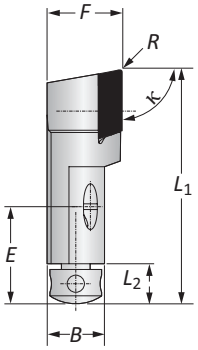

Insert Form 04, 05 Radial Cutting Insert Holders

Holder Type	K	D_{min} Boring Range	Insert Holder L_1	L_2	B	H_1	H_2	F	R Radius	E	Holder Cutting Form	L	Insert Form	Part No.
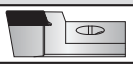	90°	54.00	41.00	7.50	10.00	17.00	18.00	13.00	0.50	17.00	Right	10.50	04	**345024**
	90°	70.00	50.00	8.00	14.00	21.00	22.00	17.00	0.50	20.00	Right	14.50	05	**345021**

B10-M: 12-13 Key on B10-L: 1

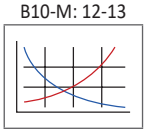

B10-H

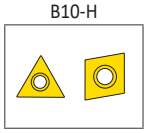

B10: VI-VII

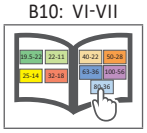

Ⓜ = Metric (mm)
Inserts sold separately

Compact Lay Down Cartridge Mounting Dimensions

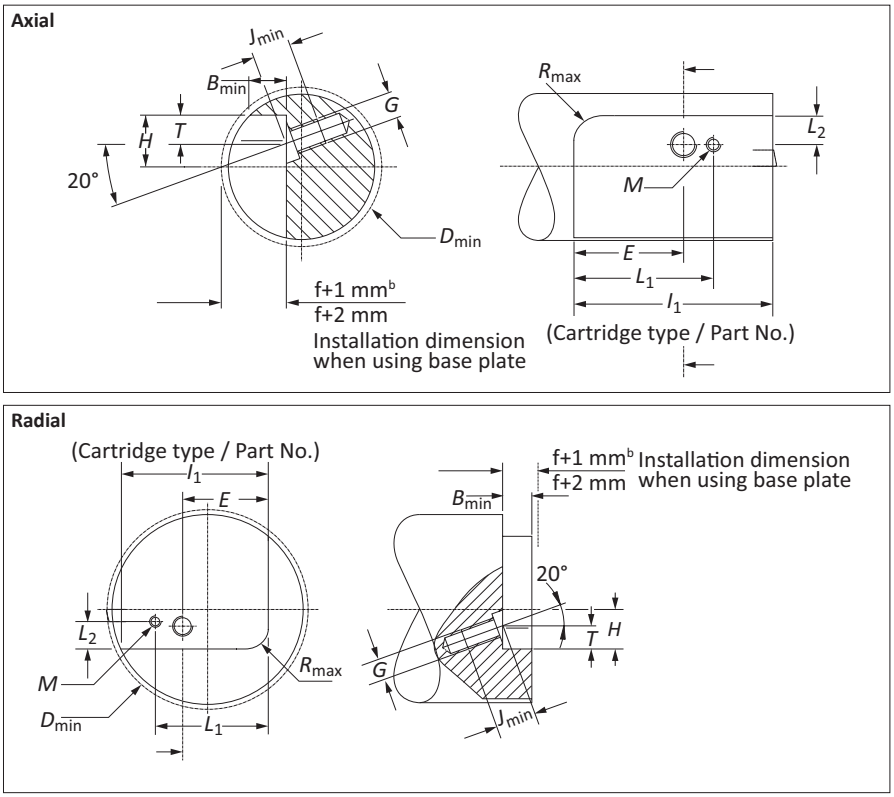

	D_{min}	H	R_{max}	B_{min}	E	L_1	T	L_2	G	M	J_{min}	Cartridge Type
	25.00	8.00	2.00	6.50	13.00	18.50	4.50	4.20	M4	M2	8.00	**XXXXX 08CK [1,2]**
	40.00	10.00	2.50	10.00	17.00	24.50	5.00	4.70	M6	M3	11.00	**XXXXX 10CK**
	50.00	12.00	5.50	14.00	20.00	28.00	6.00	5.70	M6	M3	12.00	**XXXXX 12CK**
	55.00	14.00	5.50	16.00	23.50	33.00	6.00	7.20	M8	M3	13.00	**XXXXX 14CK**
ⓜ	70.00	20.00	6.50	14.00	20.00	27.50	6.00	11.20	M8	M3	15.00	**345020**
	70.00	22.00	6.50	14.00	20.00	28.00	6.00	11.20	M8	M3	15.00	**345021***
	70.00	20.00	6.50	14.00	20.00	27.50	6.00	11.20	M8	M3	15.00	**345022**
	54.00	15.00	3.00	10.00	17.00	23.50	5.00	9.70	M6	M3	11.00	**345023**
	54.00	18.00	3.00	10.00	17.00	24.00	5.00	9.20	M6	M3	11.00	**345024***
	54.00	15.00	3.00	10.00	17.00	23.50	5.00	9.70	M6	M3	11.00	**345025**

*Radial

1. From D_{min} 25 mm - 32 mm, the short clamp holder is 0.5 mm from the middle.

2. Installation with base plate.

B10-M: 12-13
Key on B10-L: 1
B10-H
B10: VI-VII

ⓜ = Metric (mm)
Inserts sold separately

Compact Lay Down Cartridges Accessories

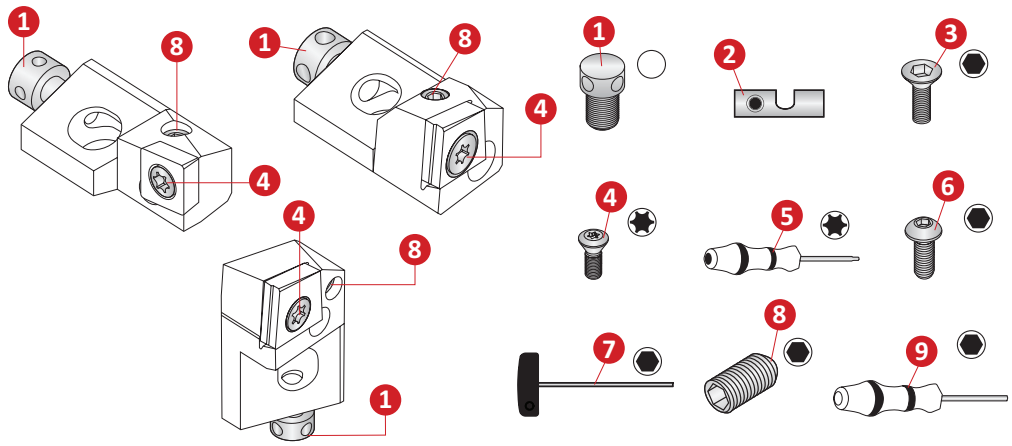

Insert Holder Part No.	1 Axial Barrel Screw	2 Shim	3 Insert Screw	4 Insert Screw	5 Torx Driver	6 Holder Fixing Screw	7 Hex Driver	8 Radial Set Screw	9 Hex Driver
345001	215742	345201	215461	115676	115590	215343	415577	114224	215472
345002	415299	345202	116433	115673	115664	215634	415164	070161	215473
345003	215250	345203	116433	415298	215150	215431	415164	215467	115575
345004	215265	345204	116433	215149	215150	315476	415165	215467	115575
345005	415299	345216	116433	115673	115664	215634	415164	070161	215473
345006	415299	345218	116433	115673	115664	215634	415164	070161	215473
345007	415299	345208	116433	115673	115664	215634	415164	070161	215473
345008	415299	345208	116433	115673	115664	215634	415164	070161	215473
345009	415299	345202	116433	115673	115664	215634	415164	070161	215473
345010	215742	345211	215461	115676	115590	215343	415577	114224	215472
345011	215742	345211	215461	115676	115590	215343	415577	114224	215472
345012	215742	345213	215461	115676	115590	215343	415577	114224	215472
345013	215742	345213	215461	115676	115590	215343	415577	114224	215472
345014	215742	345201	215461	115676	115590	215343	415577	114224	215472
345015	415299	345215	116433	115673	115664	215634	415164	070161	215473
345016	415299	345216	116433	115673	115664	215634	415164	070161	215473
345017	415299	345218	116433	115673	115664	215634	415164	070161	215473
345018	415299	345218	116433	115673	115664	215634	415164	070161	215473
345019	415299	345208	116433	115673	115664	215634	415164	070161	215473
345020	215250	345220	116433	415949	215150	315476	415165	215467	115575
345021	215250	345221	116433	415949	215150	315476	415165	215104	115575
345022	215250	345222	116433	415949	215150	315476	415165	215467	115575
345023	415299	345223	116433	415977	115664	215634	415164	415280	215473
345024	415299	345224	116433	415977	115664	215634	415164	070161	215473
345025	415299	345225	116433	415977	115664	215634	415164	415280	215473

B10-M: 12-13
Key on B10-L: 1
B10-H
B10: VI-VII

Ⓜ = Metric (mm)
Inserts sold separately

Notes

SECTION

B10-M

Accessories / Technical Information

Wohlhaupter® Accessories / Technical Information

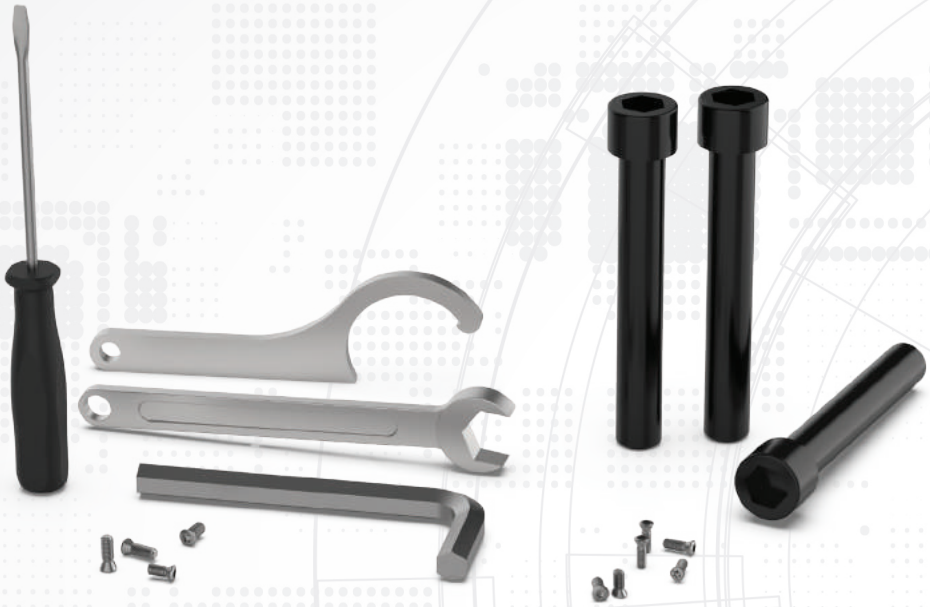

Your safety and the safety of others is very important. This catalogue contains important safety messages. Always read and follow all safety precautions.

This triangle is a safety hazard symbol. It alerts you to potential safety hazards that can cause tool failure and serious injury.

When you see this symbol in the catalogue, look for a related safety message that may be near this triangle or referred to in the nearby text.

There are safety signal words also used in the catalogue. Safety messages follow these words.

⚠ WARNING

WARNING (shown above) means that failure to follow the precautions in this message could result in tool failure and serious injury.

NOTICE means that failure to follow the precautions in this message could result in damage to the tool or machine but not result in personal injury.

NOTE and **IMPORTANT** are also used. These are important that you read and follow but are not safety-related.

Visit www.alliedmachine.com for the most up-to-date information and procedures.

Applicable Industries

Aerospace | Agriculture | Automotive | Firearms | General Machining | Oil & Gas | Renewable Energy

Reference Icons
The following icons will appear throughout the catalogue to help you navigate between products.

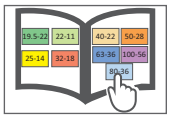

MVS Connection Color Guide
Detailed instructions and information regarding the MVS connection(s)

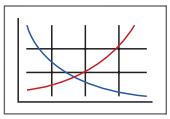

Recommended Cutting Data
Speed and feed recommendations for optimum and safe boring

Accessories and Technical Information Table of Contents

Threaded Taper Pins . . . . . 2 - 3

Clamping Pieces 4

Heavy Metal Balancing Screws 5

Torque Drivers and Wrenches 6

Torque Driver Set and Wrench Set 7

Technical Information

Guidelines for not Exceeding Recommended Length-to-diameter Ratio . . . . . 8 - 10

Calculating Tool Assembly Weight 11

Recommended Cutting Data

Metric . . . . . 12 - 13

Accessories

Threaded Taper Pins for MVS Connections

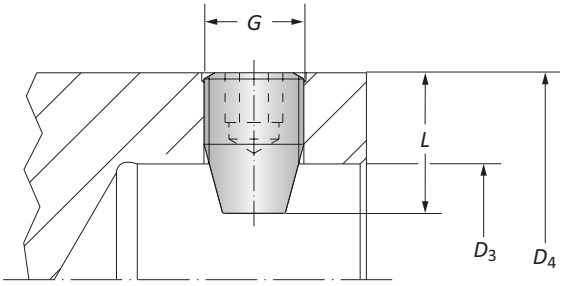

Connection D_4 | D_3	Taper Pin G	L	Service Key	Steel Part No.	Titanium Part No.
19.5 - 11	M5 x 0.5	6.50	s2.5 / A	**115949**	–
22 - 11	M5 x 0.5	8.30	s2.5 / A	**215375**	–
25 - 14	M8 x 1.0	8.30	s4 / B	**132174**	–
32 - 18	M8 x 1.0	10.40	s4 / B	**132142**	–
40 - 22	M10 x 1.0	14.50	s5 / B	**133113**	–
50 - 28	M12 x 1.0	16.70	s6 / B	**132145**	**415334**
63 - 36	M16 x 1.5	19.80	s8 / B	**132146**	**415336**
80 - 36	M16 x 1.5	28.80	s8 / B	**132191**	**415335**
100 - 56	M24 x 2.0	34.00	s12 / B	**215470**	**415337**

NOTE: Steel or titanium taper pins are used in balancing the Alu-Line tooling.

Accessories

Threaded Taper Pins for MVS Connections

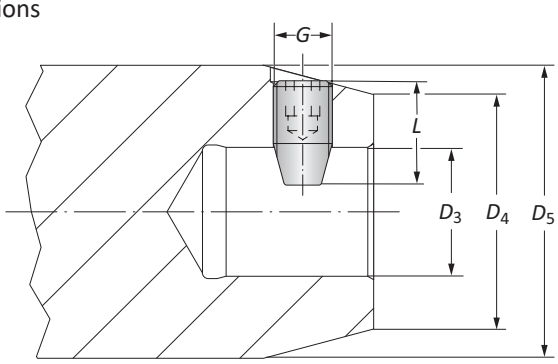

	Connection	Taper Pin				Steel	Titanium
	D_4 | D_3	G	L	D_5	Service Key	Part No.	Part No.
	22 - 11	M5 x 0.5	8.30	32.00	s2.5 / A	**215375**	–
	22 - 11	M5 x 0.5	16.00	40.00	s2.5 / A	**215376**	–
	22 - 11	M5 x 0.5	16.00	50.00	s2.5 / A	**215376**	–
	22 - 11	M5 x 0.5	16.00	63.00	s2.5 / A	**215376**	–
	25 - 14	M8 x 1.0	10.40	32.00	s4 / B	**132142**	–
	25 - 14	M8 x 1.0	10.40	36.00	s4 / B	**132142**	–
	32 - 18	M8 x 1.0	10.40	35.00	s4 / B	**132142**	–
ⓜ	32 - 18	M8 x 1.0	14.50	37.00	s4 / B	**132143**	–
	32 - 18	M8 x 1.0	14.50	40.00	s4 / B	**132143**	–
	32 - 18	M8 x 1.0	14.50	46.00	s4 / B	**132143**	–
	40 - 22	M10 x 1.0	14.50	40.00	s5 / B	**133113**	–
	40 - 22	M10 x 1.0	17.80	47.00	s5 / B	**132144**	–
	40 - 22	M10 x 1.0	17.80	50.00	s5 / B	**132144**	–
	50 - 28	M12 x 1.0	16.70	63.00	s6 / B	**132145**	**415334**
	63 - 36	M16 x 1.5	19.80	80.00	s8 / B	**132146**	**415336**

NOTE: Steel or titanium taper pins are used in balancing the Alu-Line tooling.

Accessories

Clamping Pieces for MVS Connection 100 - 56 | D 60 / D 40 Connections

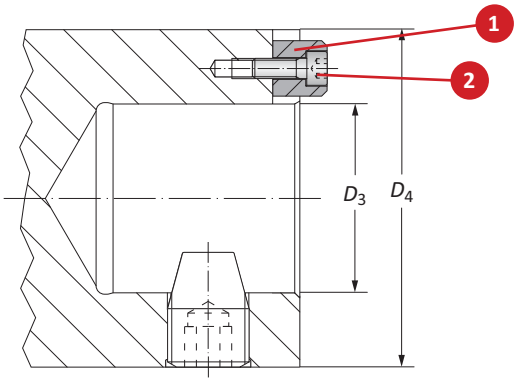

Clamping Pieces for MVS 100 - 56

	1 Torque			2 Cap Screw		
Connection	Service Key	*D x L*	Part No.	Service Key	*D x L*	Part No.
100 - 56	–	–	**115641**	S5 / B	M6 x 1 x 16	**115147**

Clamping Pieces for D 60 / D 40

	1 Torque
Connection	Part No.
D 60	**115643 (125 mm)**
D 60	**KW31562 (110 mm)**
D 40	**117143**

Clamping Pieces for D 60 / D 40

	2 Cap Screw		
Connection	Service Key	*D x L*	Part No.
D 60	s10 / B	M12 x 1.75 x 25	**115237**
D 40	s5 / B	M6 x 1 x 16	**115147**

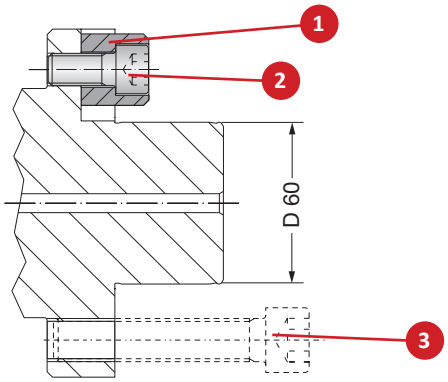

Clamping Pieces for D 60 / D 40

	3 Cap Screw		
Connection	Service Key	*D x L*	Part No.
D 60	s14 / C	M16 x 2 x 80	**115170**[1]
D 60	s14 / C	M16 x 2 x 55	**215189**[2]
D 40	s10 / B	M12 x 1.75 x 75	**315186**[3]
D 40	s10 / B	M12 x 1.75 x 50	**077104**[2]

[1] To mount boring tools above Ø200.00 mm, see section B10-F
[2] Cap screws used for mounting cutter heads to DIN 1830
[3] Ø200.00 mm - 520.00 mm

Accessories

Heavy Metal Balancing Screws

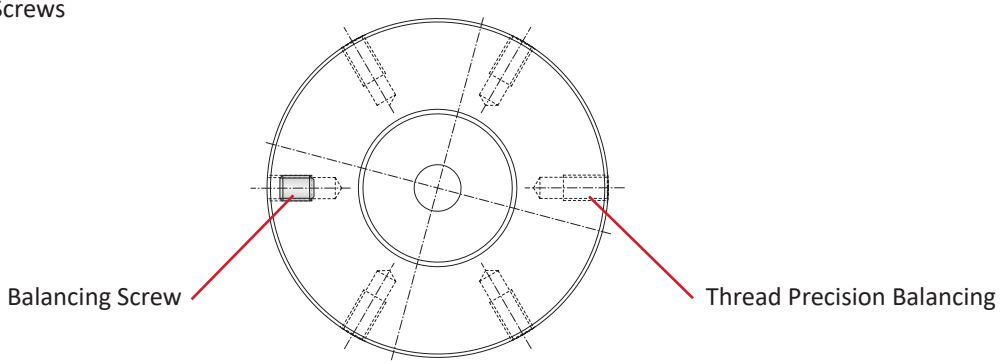

Balancing Screw		
Nominal Size	**Service Key**	**Part No.**
M5 x 0.8 x 6	0.8 x 4 / K	**415573**
M6 x 1 x 6	0.8 x 4 / K	**415284**
M6 x 1 x 8	0.8 x 4 / K	**415341**
M6 x 1 x 10	0.8 x 4 / K	**415283**
M8 x 1.25 x 8	1.2 x 6.5 / K	**415285**
M8 x 1.25 x 10	1.2 x 6.5 / K	**415286**
M8 x 1.25 x 12	1.2 x 6.5 / K	**415287**

Accessories

Torque Drivers | Wrenches

Service Keys for Insert Holders and Fixing Screws (Type A, B, C, F)

Service Key	Part No.
s1.5 / A	**215472**
s2 / A	**215473**
s2 / B	**415761**
s2.5 / A	**115575**
s2.5 / B	**415577**
s3 / A	**115630**
s3 / B	**415578**
s4 / B	**115576**
s4 / F	**315265**
s4 / B	**415164**
s5 / B	**115577**
s5 / B	**415165**
s6 / B	**115578**
s8 / B	**115579**
s8 / C	**415611**
s10 / B	**115580**
s12 / B	**215638**
s14 / C	**215639**

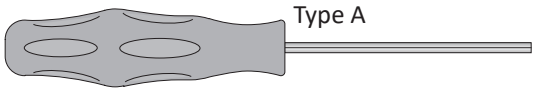

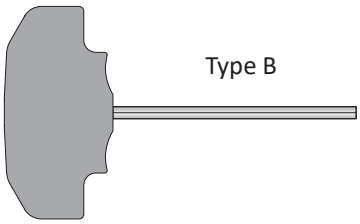

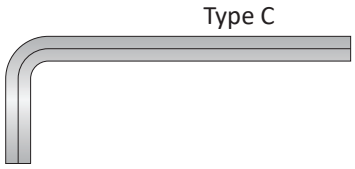

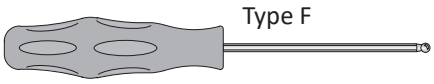

Fixed Torque Driver (Type B, H)

Service Key	Part No.
T6 / H	**115537**
T7 / H	**115591**
T8 / H	**115590**
T15 / H	**115664**
T20 / H	**215150**
T25 / B	**415121**

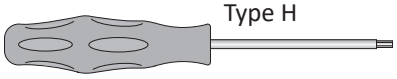

Torque Driver (Type H)

Service Key	Part No.
T6 / H	**415507**
T7 / H	**415508**
T8 / H	**415514**
T15 / H	**415510**
T20 / H	**415543**

Torque Driver (Type K)

Service Key	Part No.
0.5 x 3 / K	**315322**
0.8 x 4 / K	**415579**
1.2 x 6.5 / K	**415580**

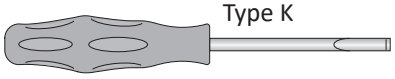

Wrench (Type P)

Service Key	Part No.
13 / P	**315689**
15 / P	**315690**
19 / P	**315691**

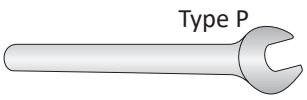

Accessories

Torque Driver Set | 25 Piece Wrench Set



NOTE: Torque driver set pictured

Torque Driver Set: Torx® Bits, Hexagon Bits, Flat Blade Bits

Type	Pieces	Size	Set Part No.
Flat Blade Bit	1	0.3 - 1.2 (Nm)	**103086**
Flat Blade Bit	1	1.2 - 3.0 (Nm)	
Flat Blade Bit	1	4.0 - 8.0 (Nm)	
Torque Driver	3	T6	
Torque Driver	3	T7	
Torque Driver	3	T8	
Torque Driver	1	T16	
Torque Driver	1	T20	
Torque Driver	1	T25	
Hexagon Bit	3	s2	
Hexagon Bit	3	s2.5	
Hexagon Bit	2	s3	
Hexagon Bit	2	s4	
Hexagon Bit	1	s5	
Flat Blade Bit	1	0.5 x 3.0	

25 Piece Wrench Set

Type	Size	Set Part No.
A	s1.5 / s2 / s2.5 / s3 / s4	**103025**
B	s4 / s5 / s6 / s8 / s10 / s12 / s14	
C	s7	
F	s4	
H	T6 / T7 / T8 / T15 / T20 / T25	
K	0.5 x 3	
P	s13 / s15 / s19	

Guidelines for not Exceeding Recommended Length-to-diameter Ratio

To calculate, see graphics below:

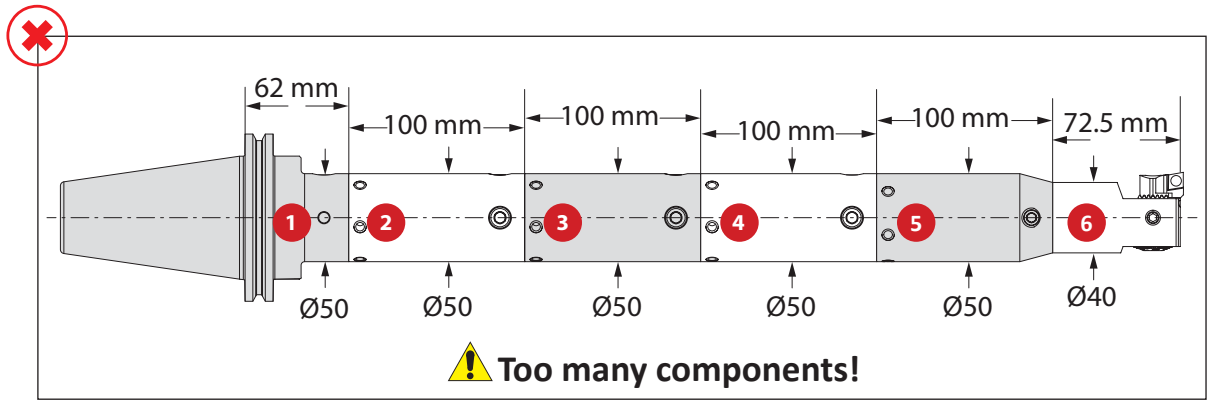

NOTE: Length-to-diameter ratio is calculated using body diameters not cutting diameter.
NOTE: Do not exceed recommended 10xD length-to-diameter ratio or exceed four total components (including shank)

Step 1: Find L : D by component

1. 1.2 = 62/50
2. 2.0 = 100/50
3. 2.0 = 100/50
4. 2.0 = 100/50
5. 2.0 = 100/50
6. 1.8 = 72.5/40

Step 2: Add each L : D Average

1.2
2.0
2.0
2.0
2.0
+ 1.8
11.0 = L : D ratio

Too long with too many components!

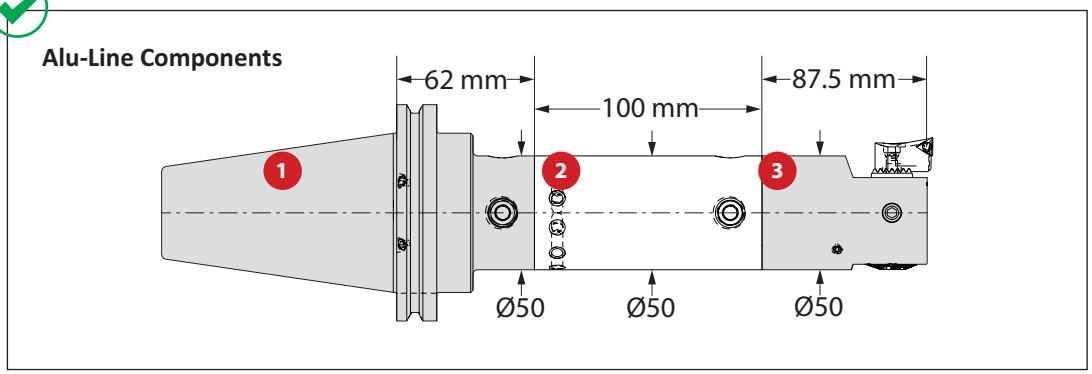

NOTE: Length-to-diameter ratio is calculated using body diameters not cutting diameter.
NOTE: Do not exceed recommended 5xD length-to-diameter ratio when using Alu-Line (Aluminium) components or exceed four total components (including shank).

Step 1: Find L : D by component

1. 1.2 = 62/50
2. 2.0 = 100/50
3. 1.8 = 87.5/50

Step 2: Add each L : D average

1.2
2.0
+ 1.8
5.0 = L : D ratio

WARNING **Tool failure can cause serious injury. To prevent:**
-Do not exceed recommended 10xD length-to-diameter ratio or exceed four total components (including shank)
-When using Alu-Line components, do not exceed recommended 5xD length-to-diameter ratio
-When using tool steel components, do not exceed recommended 6xD length-to-diameter ratio
-When using heavy metal components, do not exceed recommended 8xD length-to-diameter ratio
-When using a carbide shank, do not exceed recommended 9xD length-to-diameter ratio
-When using a NOVI[TECH®] module, do not exceed recommended 10xD length-to-diameter ratio
Factory technical assistance is available for your specific applications through our Application Engineering department. *email:* **engineering.eu@alliedmachine.com**

Guidelines for not Exceeding Recommended Length-to-diameter Ratio

To calculate, see graphics below:

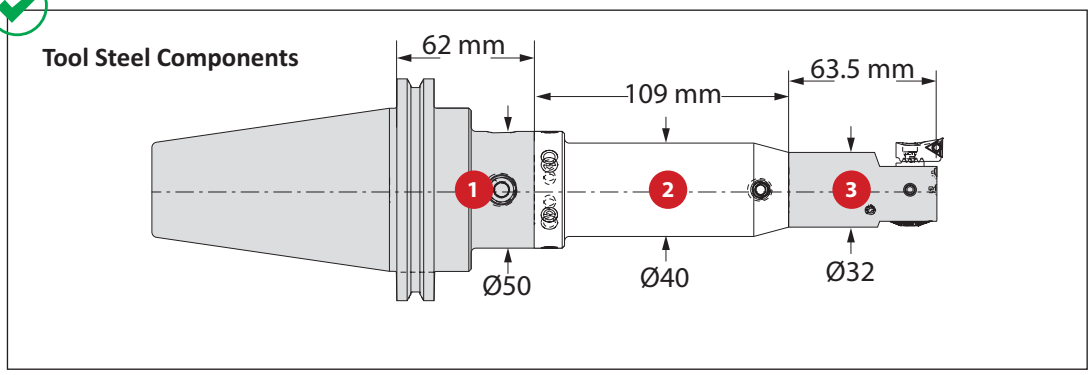

NOTE: Length-to-diameter ratio is calculated using body diameters not cutting diameter.
NOTE: When using steel components, do not exceed recommended 6xD length-to-diameter ratio or exceed four total components (including shank).

Step 1: Find L : D by component
1. 1.2 = 62/50
2. 2.7 = 109/40
3. 2.0= 63.5/32

Step 2: Add each L : D average
1.2
2.7
+ 2.0
5.9 = L : D ratio

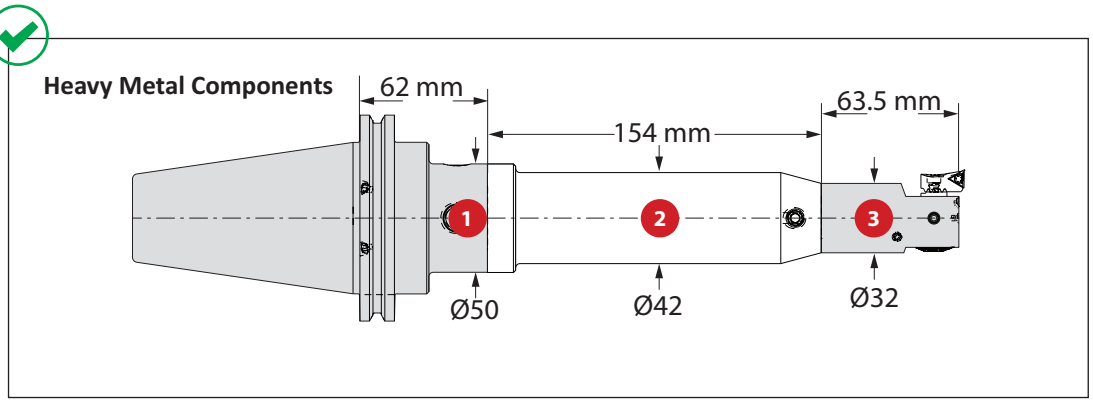

NOTE: Length-to-diameter ratio is calculated using body diameters not cutting diameter.
NOTE: When using heavy metal components, do not exceed recommended 8xD length-to-diameter ratio or exceed four total components (including shank).

Step 1: Find L : D by component
1. 1.2 = 62/50
2. 3.6 = 154/42
3. 2.0 = 63.5/32

Step 2: Add each L : D average
1.2
3.6
+ 2.0
6.8= L : D ratio

⚠ WARNING **Tool failure can cause serious injury. To prevent:**
-Do not exceed recommended 10xD length-to-diameter ratio or exceed four total components (including shank)
-When using Alu-Line components, do not exceed recommended 5xD length-to-diameter ratio
-When using tool steel components, do not exceed recommended 6xD length-to-diameter ratio
-When using heavy metal components, do not exceed recommended 8xD length-to-diameter ratio
-When using a carbide shank, do not exceed recommended 9xD length-to-diameter ratio
-When using a NOVI[TECH®] module, do not exceed recommended 10xD length-to-diameter ratio
Factory technical assistance is available for your specific applications through our Application Engineering department. *email:* **engineering.eu@alliedmachine.com**

Guidelines for not Exceeding Recommended Length-to-diameter Ratio

To calculate, see graphics below:

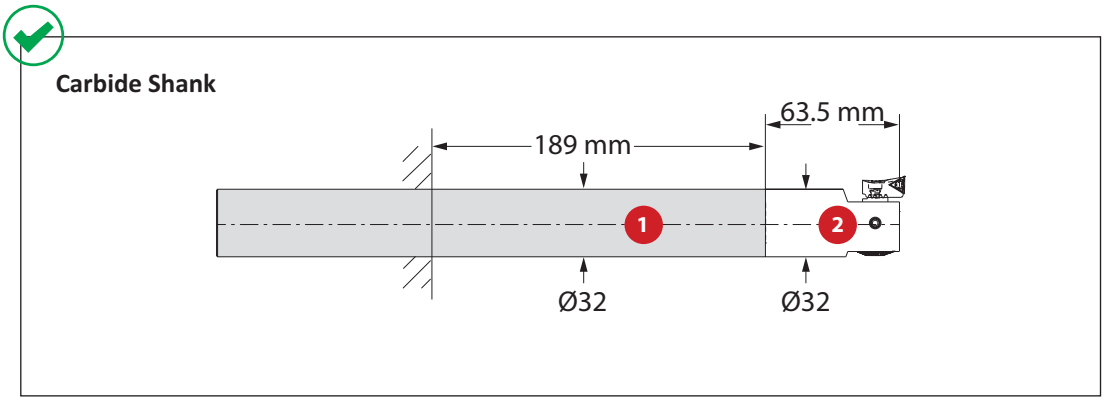

NOTE: Length-to-diameter ratio is calculated using body diameters not cutting diameter.
NOTE: When using carbide shank components, do not exceed recommended 9xD length-to-diameter ratio or exceed 4 total components.

Step 1: Find L : D by component
1. 8.1 = 189/32
2. 2.0 = 63.5/32

Step 2: Add each L : D average
5.9
+ 2.0
7.9 = L : D ratio

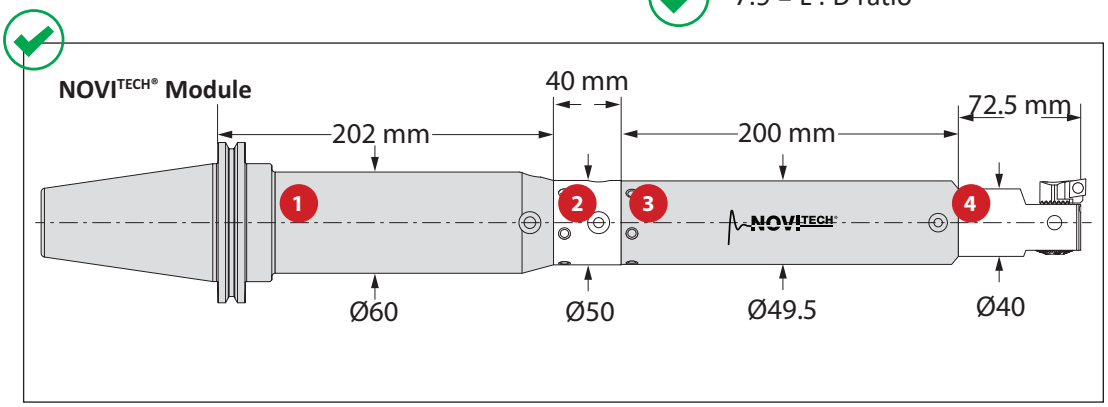

NOTE: Length-to-diameter ratio is calculated using body diameters not cutting diameter.
NOTE: Do not exceed recommended 10xD length-to-diameter ratio when using NOVI^{TECH} intermediate modules or exceed four total components (including shank)
NOTE: The NOVI^{TECH} intermediate module should always be assembled as close as possible to the cutting edge (i.e. the next component behind the boring head)

Step 1: Find L : D by component
1. 3.3 = 202/60
2. 0.8 = 40/50
3. 4.0 = 200/49.5
4. 1.8 = 72.5/40

Step 2: Add each L : D average
3.3
0.8
4.0
+ 1.8
9.9 = L : D ratio

Component	Length-to-diameter Ratio
Alu-Line	5xD
Tool Steel	6xD
Heavy Metal	8xD
Carbide	9xD
NOVI$^{TECH®}$	10xD

⚠ WARNING **Tool failure can cause serious injury. To prevent:**
-Do not exceed recommended 10xD length-to-diameter ratio or exceed four total components (including shank)
-When using Alu-Line components, do not exceed recommended 5xD length-to-diameter ratio
-When using tool steel components, do not exceed recommended 6xD length-to-diameter ratio
-When using heavy metal components, do not exceed recommended 8xD length-to-diameter ratio
-When using a carbide shank, do not exceed recommended 9xD length-to-diameter ratio
-When using a NOVI$^{TECH®}$ module, do not exceed recommended 10xD length-to-diameter ratio
Factory technical assistance is available for your specific applications through our Application Engineering department. *email:* **engineering.eu@alliedmachine.com**

Calculating Tool Assembly Weight

To calculate, see graphics below:

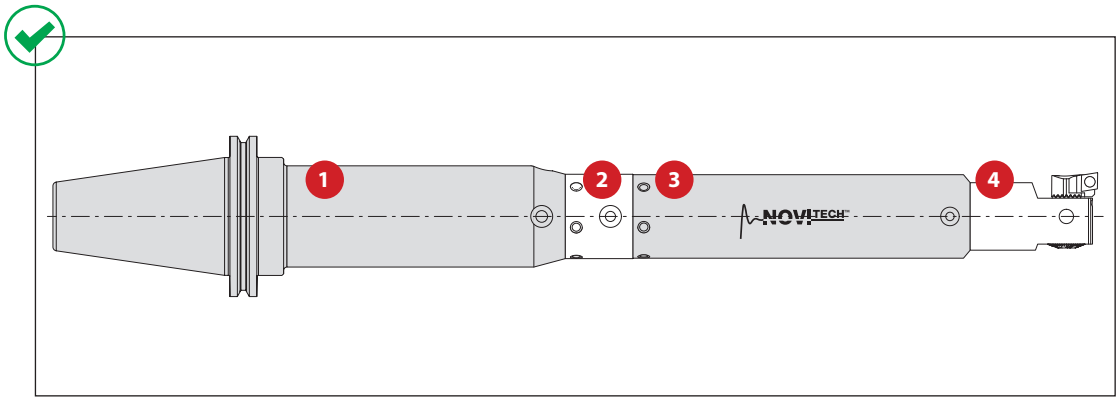

Step 1: Find weight for each component circled in the example table below

Example:

MVS Connection	Boring Range	4 Boring Head					
D_1 & D_2	A	X_1	X_2	L_2	D_5	Weight	Part No.
40 - 22	53.01 - 65.98	75.00	39.00	72.50	–	0.70 (kg)	**320004**

Step 2: Calculate total assembly weight

1 6.6 kg
2 0.6 kg
3 3.5 kg
\+ 4 0.7 kg
11.4 kg

Step 3: Consult machine tool builder to ensure tool assembly weight does not exceed machine capabilities.

WARNING **Exceeding weight capacity for machine tool spindle and tool changer can cause machine damage and/or serious injury. To prevent:**
-Consult machine tool builder for machine's weight limitations.
Factory technical assistance is also available for specific applications through our Application Engineering department. *email:* **engineering.eu@alliedmachine.com**

Recommended Cutting Data | Metric (mm)

ISO	Material	(BHN) Hardness	Grade	*Speed M / Min	Recommended Feed (mm / tooth) Nose Radii 0.1 mm	0.2 mm	0.4 mm	0.9 mm
P	**Free-Machining Steel** 1118, 1215, 12L14, etc.	100 - 250	Carbide	150 - 300	0.02 - 0.08	0.05 - 0.13	0.10 - 0.15	0.15 - 0.23
P	**Low-Carbon Steel** 1010, 1020, 1025, 1522, 1144, etc.	85 - 275	Carbide	145 - 280	0.02 - 0.05	0.05 - 0.10	0.08 - 0.13	0.13 - 0.20
P	**Medium-Carbon Steel** 1030, 1040, 1050, 1527, 1140, 1151, etc.	125 - 325	Carbide	145 - 280	0.02 - 0.05	0.05 - 0.10	0.08 - 0.13	0.13 - 0.20
P	**Alloy Steel** 4140, 5140, 8640, etc.	125 - 375	Carbide	120 - 215	0.02 - 0.05	0.05 - 0.10	0.08 - 0.13	0.13 - 0.20
P	**High-Strength Alloy** 4340, 4330V, 300M, etc.	225 - 400	Carbide	100 - 180	0.02 - 0.05	0.05 - 0.10	0.08 - 0.13	0.13 - 0.20
P	**Structural Steel** A36, A285, A516, etc.	100 - 350	Carbide	145 - 280	0.02 - 0.05	0.05 - 0.10	0.08 - 0.13	0.13 - 0.20
P	**Tool Steel** H-13, H-21, A-4, 0-2, S-3, etc.	150 - 250	Carbide	100 - 180	0.02 - 0.05	0.05 - 0.08	0.08 - 0.10	0.10 - 0.15
S	**High-Temp Alloy** Hastelloy B, Inconel 600, etc.	140 - 310	Carbide	30 - 70	0.02 - 0.05	0.05 - 0.08	0.08 - 0.13	0.10 - 0.15
S	**Titanium Alloy**	140 - 310	Carbide	40 - 90	0.02 - 0.05	0.05 - 0.08	0.08 - 0.13	0.10 - 0.15
S	**Aerospace Alloy** S82	185 - 350	Carbide	40 - 90	0.02 - 0.05	0.05 - 0.08	0.08 - 0.13	0.10 - 0.15
M	**Stainless Steel 400 Series** 416, 420, etc.	185 - 350	Carbide	90 - 160	0.02 - 0.05	0.05 - 0.10	0.08 - 0.10	0.10 - 0.15
M	**Stainless Steel 300 Series** 304, 316, 17-4PH, etc.	135 - 275	Carbide	90 - 160	0.02 - 0.05	0.05 - 0.10	0.08 - 0.10	0.10 - 0.15
M	**Super Duplex Stainless Steel**	135 - 275	Carbide	90 - 160	0.02 - 0.05	0.05 - 0.10	0.08 - 0.10	0.10 - 0.15

*Not to exceed max recommended RPM for boring head found in corresponding Wohlhaupter Operation Manual

Deep Hole Boring Speed Adjustment

⚠ For Dynamic Boring Tool Length				
Boring Type	**7xD**	**8xD**	**9xD**	**10xD**
Roughing	❖	❖	❖	❖
Finishing	0.70	0.50	0.30	❖

❖ Contact our Application Engineering department for assistance when boring these depths without NOVI^{TECH}.

Deep Hole Boring Speed Adjustment

⚠ For Dynamic Boring Tool NOVI^{TECH} Length			
Boring Type	**8xD**	**9xD**	**10xD**
Roughing	0.80	0.60	0.40
Finishing	0.90	0.70	0.50

*Not to exceed recommended RPM printed on NOVI^{TECH} module

Recommended Speed Example

If the recommended speed for a finish boring assembly under 5xD is 120 M/Min, then the speed for a 10xD finish boring assembly in the same application would be 60 M/Min (120 M/Min x 0.50 = 60 M/Min)

5xD = 120 M/Min	10xD = 60 M/Min

IMPORTANT: Max spindle speed refers to maximum possible speed for individual boring head and is not a recommended parameter. Factory technical assistance is available for your specific applications through our Application Engineering department. *email:* **engineering.eu@alliedmachine.com**

⚠ **WARNING** **Tool failure can cause serious injury. To prevent:**
-Do not exceed recommended 10xD length-to-diameter ratio or exceed four total components (including shank)
-When using Alu-Line components, do not exceed recommended 5xD length-to-diameter ratio
-When using tool steel components, do not exceed recommended 6xD length-to-diameter ratio
-When using heavy metal components, do not exceed recommended 8xD length-to-diameter ratio
-When using a carbide shank, do not exceed recommended 9xD length-to-diameter ratio
-When using a NOVI$^{TECH®}$ module, do not exceed recommended 10xD length-to-diameter ratio
Factory technical assistance is available for your specific applications through our Application Engineering department. *email:* **engineering.eu@alliedmachine.com**

Recommended Cutting Data | Metric (mm)

ISO	Material	(BHN) Hardness	Grade	*Speed M / Min	Recommended Feed (mm / tooth) Nose Radii 0.1 mm	0.2 mm	0.4 mm	0.9 mm
H	**Wear Plate** Hardox®, AR400, T-1, etc.	400 - 600	Carbide	30 - 60	0.02 - 0.05	0.05 - 0.08	0.08 - 0.10	0.10 - 0.15
			CBN	70 - 180	0.02 - 0.05	0.05 - 0.08	0.08 - 0.10	0.10 - 0.15
	Hardened Steel	300 - 500	Carbide	40 - 80	0.02 - 0.05	0.05 - 0.08	0.08 - 0.10	0.10 - 0.15
			CBN	70 - 180	0.02 - 0.05	0.05 - 0.08	0.08 - 0.10	0.10 - 0.15
K	**SG / Nodular Cast Iron**	120 - 320	Carbide	145 - 260	0.02 - 0.05	0.05 - 0.10	0.08 - 0.13	0.13 - 0.20
	Grey / White Iron	180 - 320	Carbide	180 - 320	0.02 - 0.05	0.05 - 0.10	0.08 - 0.13	0.13 - 0.20
			CBN	400 - 1000	0.02 - 0.05	0.05 - 0.10	0.08 - 0.13	0.13 - 0.20
N	**Cast Aluminium**	30 - 180	Carbide	260 - 850	0.02 - 0.05	0.05 - 0.10	0.08 - 0.13	0.13 - 0.20
			PCD	495 - 1995	0.02 - 0.05	0.05 - 0.10	0.08 - 0.13	0.13 - 0.20
	Wrought Aluminium	30 - 180	Carbide	205 - 600	0.02 - 0.05	0.05 - 0.13	0.10 - 0.15	0.15 - 0.23
	Aluminium Bronze	100 - 250	Carbide	145 - 280	0.02 - 0.05	0.05 - 0.10	0.10 - 0.13	0.13 - 0.20
	Brass	100	Carbide	205 - 600	0.02 - 0.05	0.05 - 0.10	0.08 - 0.13	0.13 - 0.20
	Copper	60	Carbide	100 - 180	0.02 - 0.05	0.05 - 0.08	0.08 - 0.10	0.10 - 0.13

*Not to exceed max recommended RPM for boring head found in corresponding Wohlhaupter Operation Manual

Deep Hole Boring Speed Adjustment

⚠ For Dynamic Boring Tool Length				
Boring Type	**7xD**	**8xD**	**9xD**	**10xD**
Roughing	❖	❖	❖	❖
Finishing	0.70	0.50	0.30	❖

❖ Contact our Application Engineering department for assistance when boring the depths without NOVI^{TECH}.

Deep Hole Boring Speed Adjustment

⚠ For Dynamic Boring Tool NOVI^{TECH} Length			
Boring Type	**8xD**	**9xD**	**10xD**
Roughing	0.80	0.60	0.40
Finishing	0.90	0.70	0.50

*Not to exceed recommended RPM printed on NOVI^{TECH} module

Recommended Speed Example

If the recommended speed for a finish boring assembly under 5xD is 120 M/Min, then the speed for a 10xD finish boring assembly in the same application would be 60 M/Min (120 M/Min x 0.50 = 60 M/Min)

5xD = 120 M/Min	10xD = 60 M/Min

IMPORTANT: Max spindle speed refers to maximum possible speed for individual boring head and is not a recommended parameter. Factory technical assistance is available for your specific applications through our Application Engineering department. *email:* **engineering.eu@alliedmachine.com**

⚠ **WARNING** **Tool failure can cause serious injury. To prevent:**
-Do not exceed recommended 10xD length-to-diameter ratio or exceed four total components (including shank)
-When using Alu-Line components, do not exceed recommended 5xD length-to-diameter ratio
-When using tool steel components, do not exceed recommended 6xD length-to-diameter ratio
-When using heavy metal components, do not exceed recommended 8xD length-to-diameter ratio
-When using a carbide shank, do not exceed recommended 9xD length-to-diameter ratio
-When using a NOVI$^{TECH®}$ module, do not exceed recommended 10xD length-to-diameter ratio
Factory technical assistance is available for your specific applications through our Application Engineering department. *email:* **engineering.eu@alliedmachine.com**

Notes

Part No.	Page
0	
005020...	B10-J: 4
007020...	B10-J: 8
013020...	B10-J: 10
019183...	B10-C: 7
023182...	B10-D: 23
027154...	B10-A: 18, B10-A: 19, B10-A: 71
031141...	B10-A: 35
068048...	B10-I: 29
068052...	B10-I: 29
068168...	B10-G: 25
068179...	B10-I: 39
068182...	B10-I: 39
070153...	B10-A: 18, B10-A: 47, B10-A: 71
070161...	B10-L: 10
070333...	B10-A: 58
070369...	B10-G: 14
071003...	B10-I: 15
071004...	B10-I: 15
071005...	B10-I: 17
071006...	B10-I: 17
071013...	B10-I: 20
071014...	B10-I: 20
071016...	B10-I: 14
071017...	B10-I: 14
071019...	B10-I: 15
071020...	B10-I: 20
071022...	B10-I: 17
071028...	B10-I: 21
071029...	B10-I: 21
071031...	B10-I: 21
071032...	B10-I: 21
071033...	B10-I: 21
071034...	B10-I: 21
071045...	B10-I: 25
071047...	B10-I: 25
071048...	B10-I: 25
071049...	B10-I: 25
071052...	B10-I: 27
071053...	B10-I: 27
071103...	B10-J: 5
071104...	B10-J: 5
071105...	B10-J: 5
071106...	B10-J: 5
071107...	B10-J: 9, B10-J: 11
071108...	B10-J: 9, B10-J: 11
071109...	B10-J: 9, B10-J: 11
071110...	B10-J: 9, B10-J: 11
071111...	B10-J: 9, B10-J: 11
071140...	B10-I: 15
071141...	B10-I: 15
071142...	B10-I: 15
071143...	B10-I: 15
071144...	B10-I: 15
071145...	B10-I: 15
071146...	B10-I: 15
071147...	B10-I: 15
071148...	B10-I: 15
071149...	B10-I: 15
071150...	B10-I: 15
071151...	B10-I: 15
071152...	B10-I: 15
071153...	B10-I: 15
071154...	B10-I: 15
071155...	B10-I: 15
071156...	B10-I: 15
071157...	B10-I: 15
071158...	B10-I: 15
071159...	B10-I: 15
071160...	B10-I: 15
071161...	B10-I: 15
071162...	B10-I: 15
071163...	B10-I: 15
071164...	B10-I: 15
071165...	B10-I: 15
071166...	B10-I: 15
071167...	B10-I: 15
071168...	B10-I: 15
071169...	B10-I: 16
071170...	B10-I: 16
071171...	B10-I: 16
071172...	B10-I: 16
071173...	B10-I: 16
071174...	B10-I: 16
071175...	B10-I: 16
071176...	B10-I: 16
071177...	B10-I: 16
071178...	B10-I: 16
071179...	B10-I: 16
071180...	B10-I: 16
071181...	B10-I: 16
071182...	B10-I: 16
071183...	B10-I: 16
071184...	B10-I: 16
071185...	B10-I: 16
071186...	B10-I: 16
071187...	B10-I: 16
071188...	B10-I: 16
071189...	B10-I: 16
071190...	B10-I: 16
071191...	B10-I: 16
071192...	B10-I: 16
071193...	B10-I: 17
071194...	B10-I: 17
071195...	B10-I: 17
071196...	B10-I: 17
071197...	B10-I: 17
071198...	B10-I: 17
071199...	B10-I: 17
071200...	B10-I: 17
071201...	B10-I: 17
071202...	B10-I: 17
071203...	B10-I: 17
071204...	B10-I: 17
071205...	B10-I: 17
071206...	B10-I: 17
071207...	B10-I: 17
071208...	B10-I: 17
071209...	B10-I: 17
071210...	B10-I: 17
071211...	B10-I: 17
071212...	B10-I: 17
071213...	B10-I: 17
071214...	B10-I: 17
071215...	B10-I: 17
071216...	B10-I: 17
071217...	B10-I: 17
071218...	B10-I: 18
071219...	B10-I: 18
071220...	B10-I: 18
071221...	B10-I: 18
071222...	B10-I: 18
071223...	B10-I: 18
071224...	B10-I: 18
071225...	B10-I: 18
071226...	B10-I: 18
071227...	B10-I: 18
071228...	B10-I: 18
071229...	B10-I: 18
071230...	B10-I: 18
071231...	B10-I: 18
071232...	B10-I: 18
071233...	B10-I: 18
071234...	B10-I: 18
071235...	B10-I: 18
071236...	B10-I: 18
071237...	B10-I: 18
071238...	B10-I: 18
071239...	B10-I: 18
071240...	B10-I: 18
071241...	B10-I: 18
071242...	B10-I: 18
071243...	B10-I: 18
071244...	B10-I: 18
071245...	B10-I: 18
071246...	B10-I: 18
071247...	B10-I: 18
071248...	B10-I: 18
071249...	B10-I: 18
071250...	B10-I: 18
071251...	B10-I: 18
071252...	B10-I: 18
071253...	B10-I: 18
071254...	B10-I: 18
071255...	B10-I: 18
071256...	B10-I: 18
071257...	B10-I: 18
071258...	B10-I: 18
071304...	B10-I: 20
071305...	B10-I: 20
071306...	B10-I: 20
071307...	B10-I: 20
071308...	B10-I: 20
071309...	B10-I: 20
071310...	B10-I: 20
071311...	B10-I: 20
071312...	B10-I: 20
071313...	B10-I: 20
071355...	B10-I: 14
071356...	B10-I: 14
071357...	B10-I: 14
071358...	B10-I: 14
071359...	B10-I: 14
071360...	B10-I: 14
071361...	B10-I: 14
071362...	B10-I: 14
071363...	B10-I: 14
071364...	B10-I: 14
071365...	B10-I: 14
071368...	B10-I: 14
071369...	B10-I: 14
071370...	B10-I: 14
071371...	B10-I: 14
071372...	B10-I: 14
071373...	B10-I: 14
071374...	B10-I: 14
071375...	B10-I: 14
071376...	B10-I: 14
071377...	B10-I: 14
071378...	B10-I: 14
071379...	B10-I: 14
071380...	B10-I: 14
071381...	B10-I: 14
071382...	B10-I: 14
071383...	B10-I: 14
071384...	B10-I: 14
071385...	B10-I: 14
071416...	B10-I: 16
071417...	B10-I: 16
071418...	B10-I: 16
071419...	B10-I: 16
071420...	B10-I: 16
071421...	B10-I: 16
071422...	B10-I: 16
071423...	B10-I: 16
071424...	B10-I: 16
071427...	B10-I: 20
071428...	B10-I: 20
071429...	B10-I: 20
071430...	B10-I: 20
071431...	B10-I: 20
071432...	B10-I: 20
071433...	B10-I: 20
071542...	B10-I: 19
071543...	B10-I: 19
071544...	B10-I: 19
071545...	B10-I: 19
071546...	B10-I: 19
071547...	B10-I: 19
071548...	B10-I: 19
071549...	B10-I: 19
071550...	B10-I: 19
071551...	B10-I: 19
071552...	B10-I: 19
071553...	B10-I: 19
071554...	B10-I: 19
071555...	B10-I: 19
071556...	B10-I: 19
071557...	B10-I: 19
071558...	B10-I: 19
071559...	B10-I: 19
071560...	B10-I: 19
071561...	B10-I: 19
071562...	B10-I: 19
071563...	B10-I: 19
071564...	B10-I: 19
071565...	B10-I: 19
071566...	B10-I: 19
071567...	B10-I: 19
071568...	B10-I: 19
071569...	B10-I: 19
071570...	B10-I: 19
071571...	B10-I: 19
071572...	B10-I: 19
071573,...	B10-I: 19
071574...	B10-I: 19
071575...	B10-I: 19
071576...	B10-I: 19
071577...	B10-I: 19
071578...	B10-I: 19
071579...	B10-I: 19
071580...	B10-I: 19
071581...	B10-I: 19
071582...	B10-I: 19
071583...	B10-I: 19
071584...	B10-I: 19
071585...	B10-I: 19
071586...	B10-I: 19
071612...	B10-I: 16
071613...	B10-I: 16
071614...	B10-I: 16
071621...	B10-I: 17
071622...	B10-I: 17
071625...	B10-I: 17
071626...	B10-I: 17
071627...	B10-I: 18
071628...	B10-I: 18
071633...	B10-I: 16
071665...	B10-I: 16
071666...	B10-I: 16
071667...	B10-I: 16
071668...	B10-I: 16
071669...	B10-I: 16
071670...	B10-I: 16
071671...	B10-I: 16
071672...	B10-I: 16
071673...	B10-I: 16
071674...	B10-I: 16
071675...	B10-I: 16
071676...	B10-I: 16
071677...	B10-I: 16
071678...	B10-I: 16
071679...	B10-I: 16
071680...	B10-I: 16
071681...	B10-I: 14
071684...	B10-I: 20
071685...	B10-I: 20
071686...	B10-I: 19
071687...	B10-I: 19
071688...	B10-I: 19
071689...	B10-I: 19
071690...	B10-I: 19
071691...	B10-I: 19
071692...	B10-I: 19
071693...	B10-I: 19
071700...	B10-I: 21
071701...	B10-I: 21
071702...	B10-I: 21
071703...	B10-I: 21
071704...	B10-I: 21
071705...	B10-I: 21
071706...	B10-I: 21
071707...	B10-I: 21
071708...	B10-I: 21
071709...	B10-I: 21
071710...	B10-I: 21
071711...	B10-I: 21
071712...	B10-I: 21
071713...	B10-I: 22
071714...	B10-I: 22
071715...	B10-I: 22
071716...	B10-I: 22
071717...	B10-I: 22
071718...	B10-I: 22
071719...	B10-I: 22
071720...	B10-I: 22
071721...	B10-I: 22
071722...	B10-I: 22
071723...	B10-I: 22
071724...	B10-I: 22
071725...	B10-I: 22
071743...	B10-I: 23
071744...	B10-I: 23
071745...	B10-I: 23
071746...	B10-I: 23
071747...	B10-I: 23

Part No.	Page
071748...	B10-I: 23
071749...	B10-I: 23
071750...	B10-I: 23
071751...	B10-I: 23
071752...	B10-I: 23
071753...	B10-I: 23
071754...	B10-I: 23
071755...	B10-I: 23
071756...	B10-I: 23
071757...	B10-I: 23
071758...	B10-I: 23
071761...	B10-I: 23
071762...	B10-I: 23
071763...	B10-I: 23
071764...	B10-I: 23
071765...	B10-I: 23
071766...	B10-I: 23
071767...	B10-I: 23
071768...	B10-I: 23
071769...	B10-I: 23
071770...	B10-I: 23
071771...	B10-I: 23
071772...	B10-I: 23
071773...	B10-I: 23
071774...	B10-I: 23
071775...	B10-I: 23
071776...	B10-I: 23
071777...	B10-I: 23
071778...	B10-I: 23
071779...	B10-I: 24
071780...	B10-I: 24
071781...	B10-I: 24
071782...	B10-I: 24
071783...	B10-I: 24
071784...	B10-I: 24
071785...	B10-I: 24
071786...	B10-I: 24
071787...	B10-I: 24
071788...	B10-I: 24
071789...	B10-I: 24
071790...	B10-F: 15, B10-I: 24
071791...	B10-I: 24
071792...	B10-I: 24
071793...	B10-F: 15, B10-I: 24
071794...	B10-I: 24
071795...	B10-F: 15, B10-I: 24
071796...	B10-I: 24
071797...	B10-I: 24
071798...	B10-F: 15, B10-I: 24
071799...	B10-I: 24
071800...	B10-I: 24
071801...	B10-I: 24
071826...	B10-I: 27
071827...	B10-I: 27
071828...	B10-I: 27
071829...	B10-I: 27
071830...	B10-I: 27
071831...	B10-I: 27
071832...	B10-I: 27
071833...	B10-I: 27
071834...	B10-I: 27
071835...	B10-I: 27
071836...	B10-I: 27
071837...	B10-I: 27

Part No.	Page
071901...	B10-I: 26
071902...	B10-I: 26
071903...	B10-I: 26
071904...	B10-I: 26
071912...	B10-I: 26
071913...	B10-I: 26
071914...	B10-I: 26
071915...	B10-I: 26
071916...	B10-I: 26
071917...	B10-I: 26
071918...	B10-I: 26
071919...	B10-I: 26
071920...	B10-I: 26
071921...	B10-I: 26
071922...	B10-I: 26
071923...	B10-I: 26
071924...	B10-I: 26
071925...	B10-I: 26
071926...	B10-I: 26
071927...	B10-I: 26
071928...	B10-I: 26
071929...	B10-I: 26
071930...	B10-I: 26
071931...	B10-I: 26
071932...	B10-I: 26
071933...	B10-I: 26
071934...	B10-I: 26
071935...	B10-I: 26
071936...	B10-I: 26
071937...	B10-I: 26
071938...	B10-I: 26
071939...	B10-I: 26
071940...	B10-I: 26
071941...	B10-I: 26
071986...	B10-I: 21
071987...	B10-I: 21
071988...	B10-I: 21
071989...	B10-I: 21
071990...	B10-I: 21
071991...	B10-I: 21
071992...	B10-I: 21
071993...	B10-I: 21
071994...	B10-I: 21
073003...	B10-J: 4
073004...	B10-J: 4
073005...	B10-J: 4
073006...	B10-J: 8, B10-J: 10
073007...	B10-J: 8, B10-J: 10
073008...	B10-J: 8, B10-J: 10
075001...	B10-J: 5
075002...	B10-J: 5
075003...	B10-J: 9, B10-J: 11
075004...	B10-J: 9, B10-J: 11
077104...	B10-M: 4
077110...	B10-G: 25
081041...	B10-A: 8
081042...	B10-A: 8
081043...	B10-A: 8
081044...	B10-A: 8
081045...	B10-A: 8
081046...	B10-A: 8
081047...	B10-A: 8
081048...	B10-A: 8
081049...	B10-A: 8
081050...	B10-A: 8
081053...	B10-A: 8
081055...	B10-A: 9, B10-A: 40

Part No.	Page
081087...	B10-J: 4
081092...	B10-J: 8, B10-J: 10
081306WHC05...	B10-A: 31, B10-A: 39, B10-A: 54, B10-A: 63
081307WHC05...	B10-A: 31, B10-A: 39, B10-A: 54, B10-A: 63
081307WHW04...	B10-A: 31, B10-A: 39, B10-A: 54, B10-A: 63
081308WHC05...	B10-A: 31, B10-A: 39, B10-A: 54, B10-A: 63
081309WHC05...	B10-A: 31, B10-A: 39, B10-A: 54, B10-A: 63
081310WHC05...	B10-A: 31, B10-A: 39, B10-A: 54, B10-A: 63
081310WHW04...	B10-A: 31, B10-A: 39, B10-A: 54, B10-A: 63
081311WHC05...	B10-A: 31, B10-A: 39, B10-A: 54, B10-A: 63
081312WHC05...	B10-A: 31, B10-A: 39, B10-A: 54, B10-A: 63
081313WHC05...	B10-A: 31, B10-A: 39, B10-A: 54, B10-A: 63
081313WHW04...	B10-A: 31, B10-A: 39, B10-A: 54, B10-A: 63
081314WHC05...	B10-A: 31, B10-A: 39, B10-A: 54, B10-A: 63
081315WHC05...	B10-A: 31, B10-A: 39, B10-A: 54, B10-A: 63
081316WHC05...	B10-A: 31, B10-A: 39, B10-A: 54, B10-A: 63

Part No.	Page
081316WHW04...	B10-A: 31, B10-A: 39, B10-A: 54, B10-A: 63
081317WBN150...	B10-A: 31, B10-A: 39, B10-A: 54, B10-A: 63
081318WBN150...	B10-A: 31, B10-A: 39, B10-A: 54, B10-A: 63
081319WBN150...	B10-A: 31, B10-A: 39, B10-A: 54, B10-A: 63
081320WBN150...	B10-A: 31, B10-A: 39, B10-A: 54, B10-A: 63
081321WBN150...	B10-A: 31, B10-A: 39, B10-A: 54, B10-A: 63
081322WBN150...	B10-A: 31, B10-A: 39, B10-A: 54, B10-A: 63
081323WHC05...	B10-A: 39, B10-A: 54, B10-A: 63
081324WHC05...	B10-A: 39, B10-A: 54, B10-A: 63
081341WBN150...	B10-A: 31, B10-A: 39, B10-A: 54, B10-A: 63
081401WHC126...	B10-A: 6, B10-A: 53
081402WHC126...	B10-A: 6, B10-A: 53
081403HC126...	B10-A: 53
081403WHC126...	B10-A: 6, B10-A: 53
081404HC126...	B10-A: 53
081404WHC126...	B10-A: 6, B10-A: 53

Part No.	Page
081405WHC126...	B10-A: 6, B10-A: 53
081406WHC126...	B10-A: 6, B10-A: 53
081407WHC126...	B10-A: 6, B10-A: 53
081408WHC126...	B10-A: 6, B10-A: 53
089001...	B10-J: 5, B10-J: 9, B10-J: 11
097153...	B10-H: 16
097154...	B10-H: 16
097241...	B10-H: 23
097242...	B10-H: 23
097244...	B10-H: 23
097245...	B10-H: 23
097247...	B10-H: 23
097249...	B10-H: 23
097252...	B10-H: 28
097253...	B10-H: 30
097254...	B10-H: 30
097255...	B10-H: 30
097256...	B10-H: 30
097257...	B10-H: 30
097258...	B10-H: 30
097259...	B10-H: 30
097260...	B10-H: 30
097261...	B10-H: 30
097262...	B10-H: 30
097294...	B10-H: 30
097324...	B10-H: 23
097445...	B10-H: 20
097454...	B10-H: 14
097462...	B10-H: 24
097486...	B10-H: 15
097487...	B10-H: 17
097496...	B10-H: 20
097497...	B10-H: 20
097512...	B10-H: 18
097529...	B10-H: 20
097539...	B10-H: 28
097546...	B10-H: 16
097552...	B10-H: 15
097557...	B10-H: 15
097559...	B10-H: 26
097566...	B10-H: 28
097599...	B10-H: 16
097686...	B10-H: 17
097701...	B10-H: 16
097738...	B10-H: 23
097755...	B10-H: 14
097831...	B10-H: 35
097832...	B10-H: 19
097833...	B10-H: 19
097862...	B10-H: 20
097877...	B10-H: 17
097899...	B10-H: 20
097926...	B10-H: 20
097953...	B10-H: 18
097957...	B10-H: 20
098060...	B10-F: 16
098061...	B10-F: 16
098062...	B10-F: 16
098063...	B10-F: 16

Part No.	Page
098064...	B10-F: 16
098065...	B10-F: 16
098066...	B10-F: 16
098067...	B10-F: 16
098068...	B10-F: 16
098069...	B10-F: 16
098070...	B10-F: 16
098071...	B10-F: 16
098073...	B10-F: 16
099049...	B10-I: 28
099050...	B10-I: 28
099051...	B10-I: 28
099053...	B10-I: 28
099054...	B10-I: 28
099055...	B10-I: 28
271128...	B10-I: 23
271129...	B10-I: 23
271130...	B10-I: 23
271131...	B10-I: 23
271132...	B10-I: 22
271133...	B10-I: 22
271134...	B10-I: 22
271135...	B10-I: 22
271136...	B10-I: 22
271137...	B10-I: 22
502066...	B10-A: 64
1	
103025...	B10-M: 7
103045...	B10-A: 21
103046...	B10-A: 20
103047...	B10-A: 23
103048...	B10-A: 22
103049...	B10-A: 25
103050...	B10-A: 24
103051...	B10-A: 27
103052...	B10-A: 26
103061...	B10-A: 73
103062...	B10-A: 74
103063...	B10-A: 75
103064...	B10-A: 76
103065...	B10-A: 77
103066...	B10-A: 78
103080...	B10-A: 80
103081...	B10-A: 79
103086...	B10-M: 7
103088...	B10-A: 48
103089...	B10-A: 49
109109...	B10-I: 33
114224...	B10-A: 19, B10-A: 71, B10-L: 10
115118...	B10-G: 22, B10-G: 23
115119...	B10-A: 19
115136...	B10-A: 35, B10-B: 27
115147...	B10-A: 18, B10-I: 33, B10-M: 4
115166...	B10-A: 71
115169...	B10-I: 33
115170...	B10-G: 23, B10-M: 4
115180...	B10-B: 27
115185...	B10-B: 27
115186...	B10-B: 27
115192...	B10-D: 23
115196...	B10-G: 23
115237...	B10-I: 33, B10-M: 4

Part No.	Page
115249...	B10-B: 27
115280...	B10-D: 23
115288...	B10-C: 7
115341...	B10-I: 33
115342...	B10-I: 33
115343...	B10-I: 33
115344...	B10-I: 33
115345...	B10-I: 33
115346...	B10-I: 33
115347...	B10-I: 33
115348...	B10-I: 33
115407...	B10-D: 23
115470...	B10-A: 19
115505...	B10-B: 15, B10-B: 21
115519...	B10-D: 23
115535...	B10-A: 19, B10-A: 58, B10-A: 72
115537...	B10-A: 19, B10-A: 58, B10-A: 72, B10-H: 14, B10-H: 15, B10-H: 19, B10-M: 6
115575...	B10-A: 19, B10-L: 10, B10-M: 6
115576...	B10-A: 19, B10-A: 58, B10-A: 72, B10-M: 6
115577...	B10-M: 6
115578...	B10-I: 12, B10-M: 6
115579...	B10-M: 6
115580...	B10-M: 6
115590...	B10-A: 19, B10-A: 58, B10-A: 72, B10-H: 20, B10-H: 21, B10-H: 22, B10-H: 23, B10-H: 24, B10-H: 25, B10-L: 10, B10-M: 6
115591...	B10-A: 19, B10-A: 58, B10-A: 72, B10-H: 16, B10-H: 17, B10-M: 6
115630...	B10-A: 72, B10-M: 6
115641...	B10-M: 4
115643...	B10-I: 33, B10-M: 4
115660...	B10-I: 39
115661...	B10-I: 39
115662...	B10-I: 39
115663...	B10-I: 39
115664...	B10-H: 29, B10-L: 10, B10-M: 6
115666...	B10-D: 23
115667...	B10-D: 23
115669...	B10-G: 22, B10-G: 23, B10-G: 25

Part No.	Page
115673...	B10-L: 10
115676...	B10-A: 19, B10-A: 58, B10-A: 72, B10-L: 10
115680...	B10-I: 9
115681...	B10-I: 9
115682...	B10-I: 9
115683...	B10-I: 9
115684...	B10-I: 9
115685...	B10-I: 9
115686...	B10-I: 9
115687...	B10-I: 9
115696...	B10-I: 33
115697...	B10-I: 33
115699...	B10-I: 39
115707...	B10-I: 33
115708...	B10-I: 33
115709...	B10-I: 33
115725...	B10-A: 18
115730...	B10-D: 23
115736...	B10-G: 25
115737...	B10-G: 25
115785...	B10-I: 39
115867...	B10-I: 39
115929...	B10-I: 33
115930...	B10-I: 33
115932...	B10-I: 33
115933...	B10-I: 33
115934...	B10-I: 33
115936...	B10-I: 33
115985...	B10-A: 58
116152...	B10-I: 33
116289...	B10-A: 19
116433...	B10-L: 10
116550...	B10-D: 23
117143...	B10-M: 4
117148...	B10-D: 23
119001...	B10-E: 12
119002...	B10-E: 12
119003...	B10-E: 12
119004...	B10-E: 12
119005...	B10-E: 12
119006...	B10-E: 12
119010...	B10-E: 8
119012...	B10-E: 8
119019...	B10-E: 9
119021...	B10-E: 9
119025...	B10-E: 9
119054...	B10-E: 8
119055...	B10-E: 8
119058...	B10-E: 12
119059...	B10-E: 8
119060...	B10-E: 9
119061...	B10-E: 9
119064...	B10-E: 9
119065...	B10-E: 12
119066...	B10-E: 12
119067...	B10-E: 9
119069...	B10-E: 12
119094...	B10-E: 8
119095...	B10-E: 9
119096...	B10-E: 9
119097...	B10-E: 9
119098...	B10-E: 9
126157...	B10-D: 23

Part No.	Page
130001T003590...	B10-J: 6
130001T003920...	B10-J: 6
130001T004480...	B10-J: 7
130001T004498...	B10-J: 7
130001T004509...	B10-J: 6
130001T007166...	B10-J: 7
130001T016960...	B10-J: 6
130001T016962...	B10-J: 6
130005T003590...	B10-J: 12
130005T003920...	B10-J: 12
130005T004480...	B10-J: 12
130005T004498...	B10-J: 12
130005T016960...	B10-J: 12
130005T016962...	B10-J: 12
132022T003590...	B10-F: 13
132022T003704...	B10-F: 12
132022T003920...	B10-F: 13
132022T004480...	B10-F: 11
132022T004498...	B10-F: 11
132022T007166...	B10-F: 13
132022T010229...	B10-F: 12
132022T016960...	B10-F: 6
132022T016962...	B10-F: 6
132066T003704...	B10-F: 12
132066T003920...	B10-F: 13
132066T004480...	B10-F: 11
132066T004498...	B10-F: 11
132066T007166...	B10-F: 13
132066T010229...	B10-F: 12
132066T016960...	B10-F: 6
132066T016962...	B10-F: 6
132076T003704...	B10-F: 12
132076T004480...	B10-F: 11
132076T016962...	B10-F: 6

Part No.	Page
132088T003704...	B10-F: 12
132088T004480...	B10-F: 11
132088T016962...	B10-F: 6
132142...	B10-M: 3
132143...	B10-M: 3
132144...	B10-M: 3
132145...	B10-M: 3
132146...	B10-M: 3
132191...	B10-M: 2
133113...	B10-M: 3
137019...	B10-B: 33, B10-G: 10, B10-G: 11, B10-G: 20
137026...	B10-B: 30, B10-B: 31, B10-B: 33, B10-G: 10, B10-G: 11, B10-G: 20
137027...	B10-B: 33, B10-G: 10, B10-G: 11, B10-G: 20
140108...	B10-D: 23
140111...	B10-D: 23
140112...	B10-D: 23
140114...	B10-D: 23
140116...	B10-D: 23
140117...	B10-D: 23
140118...	B10-B: 33, B10-D: 23, B10-G: 20
140119...	B10-D: 23
140121...	B10-D: 23
143051...	B10-D: 18
143052...	B10-D: 18
143053...	B10-D: 18
143054...	B10-D: 18
143055...	B10-D: 18
143056...	B10-D: 18
143057...	B10-D: 18
143058...	B10-D: 18
145184...	B10-A: 18, B10-A: 19, B10-A: 47, B10-A: 71
148001...	B10-D: 7, B10-D: 9, B10-D: 11, B10-D: 16
148002...	B10-D: 7, B10-D: 9, B10-D: 11, B10-D: 16
148003...	B10-D: 7, B10-D: 9, B10-D: 11, B10-D: 16
148004...	B10-D: 7, B10-D: 9, B10-D: 10, B10-D: 11, B10-D: 14, B10-D: 16
148005...	B10-D: 7, B10-D: 9, B10-D: 10, B10-D: 11, B10-D: 14,

Part No.	Page
	B10-D: 17, B10-D: 21
148006...	B10-D: 7, B10-D: 9, B10-D: 10, B10-D: 11, B10-D: 14, B10-D: 17, B10-D: 21
148007...	B10-B: 32, B10-D: 8, B10-D: 9, B10-D: 10, B10-D: 13, B10-D: 17, B10-D: 19, B10-D: 20, B10-D: 21
148009...	B10-B: 32, B10-D: 8, B10-D: 9, B10-D: 10, B10-D: 13, B10-D: 17, B10-D: 19, B10-D: 20, B10-D: 21
148010...	B10-D: 19
148012...	B10-D: 20
148013...	B10-D: 20
148014...	B10-D: 20
148015...	B10-D: 20
148016...	B10-D: 20
148017...	B10-D: 7, B10-D: 9, B10-D: 11, B10-D: 16
148018...	B10-D: 7, B10-D: 9, B10-D: 11, B10-D: 16
148021...	B10-D: 6, B10-D: 12
148022...	B10-D: 6, B10-D: 12
148023...	B10-D: 6, B10-D: 12
148024...	B10-D: 6, B10-D: 12
148110...	B10-D: 23
148113...	B10-D: 23
148114...	B10-D: 23
149010...	B10-G: 12
149020...	B10-G: 12
149030...	B10-D: 21
149055...	B10-G: 14
149056...	B10-G: 14
149058...	B10-G: 14
149083...	B10-G: 12
149085...	B10-G: 14
149089...	B10-G: 12
149090...	B10-G: 12
149093...	B10-G: 12
149094...	B10-G: 12
149096...	B10-G: 12
149099...	B10-G: 12
151001...	B10-D: 6, B10-D: 7, B10-D: 11, B10-D: 12
151002...	B10-D: 6, B10-D: 7, B10-D: 11, B10-D: 12
151003...	B10-D: 6, B10-D: 7,

Part No.	Page
	B10-D: 11, B10-D: 12
151004...	B10-D: 6, B10-D: 7, B10-D: 11, B10-D: 12
151005...	B10-D: 7, B10-D: 11
151006...	B10-D: 7, B10-D: 11
151007...	B10-D: 8, B10-D: 13
151008...	B10-D: 8, B10-D: 13
151009...	B10-D: 10, B10-D: 14
151010...	B10-D: 10, B10-D: 14
151011...	B10-D: 9
151012...	B10-D: 9
151013...	B10-D: 9
151014...	B10-D: 9
151015...	B10-D: 9
151019...	B10-D: 21
151022...	B10-D: 10, B10-D: 14
151023...	B10-D: 6, B10-D: 7
151024...	B10-D: 6, B10-D: 7
151025...	B10-D: 7
151026...	B10-D: 7
151027...	B10-D: 8
151028...	B10-D: 8
151032...	B10-D: 10, B10-D: 14
151034...	B10-D: 14
151035...	B10-D: 10, B10-D: 14
151036...	B10-D: 9
151037...	B10-D: 9
151038...	B10-D: 9
151039...	B10-D: 21
151043...	B10-D: 10, B10-D: 14
151059...	B10-D: 21
151061...	B10-D: 11, B10-D: 12
151062...	B10-D: 11, B10-D: 12
151086...	B10-D: 7, B10-D: 11
151087...	B10-D: 8, B10-D: 13
151088...	B10-D: 8, B10-D: 13
151090...	B10-D: 11
151091...	B10-D: 13
151092...	B10-D: 13
151093...	B10-D: 11, B10-D: 12
151094...	B10-D: 11, B10-D: 12
151095...	B10-D: 11
151096...	B10-D: 11
151097...	B10-D: 13
151098...	B10-D: 13
161002...	B10-I: 5
161003...	B10-I: 5
161004...	B10-I: 5
161005...	B10-I: 5

Part No.	Page
161006...	B10-I: 5
161016...	B10-I: 4
161024...	B10-I: 2
161026...	B10-I: 2
161027...	B10-I: 2
161028...	B10-I: 2
161038...	B10-I: 36, B10-I: 37
161082...	B10-I: 6
161098...	B10-I: 4
161099...	B10-I: 29
162002...	B10-I: 5
162003...	B10-I: 5
162004...	B10-I: 5
162011...	B10-I: 4
162015...	B10-I: 2
162016...	B10-I: 2
162017...	B10-I: 2
162018...	B10-I: 2
162019...	B10-I: 2
162020...	B10-I: 2
162032...	B10-I: 6
162033...	B10-I: 6
162080...	B10-I: 13
162081...	B10-I: 13
162082...	B10-I: 13
162083...	B10-I: 13
162093...	B10-I: 29
162094...	B10-I: 36, B10-I: 37
162095...	B10-I: 29
166103...	B10-I: 8
166104...	B10-I: 8
166105...	B10-I: 8
201065...	B10-G: 13
415164...	B10-M: 6
2	
201003...	B10-D: 16
201004...	B10-D: 16
201007...	B10-D: 16
201008...	B10-D: 16
201009...	B10-D: 16
201010...	B10-D: 17
201011...	B10-D: 17
201012...	B10-D: 17
201013...	B10-D: 17
201015...	B10-G: 13
201017...	B10-D: 16
201018...	B10-D: 16
201019...	B10-D: 16
201020...	B10-D: 16
201021...	B10-D: 17
201022...	B10-D: 17
201023...	B10-D: 17
201024...	B10-D: 17
201025...	B10-G: 13
201057...	B10-D: 16
201058...	B10-D: 16
201059...	B10-D: 16
201061...	B10-D: 17
201062...	B10-D: 17
201063...	B10-D: 17
201064...	B10-D: 17
201067...	B10-D: 16
201068...	B10-D: 16
201069...	B10-D: 16
201070...	B10-D: 16
201071...	B10-D: 17
201073...	B10-D: 17
201074...	B10-D: 17

Part No.	Page
201075...	B10-G: 13
201077...	B10-D: 16
201082...	B10-D: 15
201083...	B10-D: 15
201087...	B10-D: 15
201088...	B10-D: 15
201089...	B10-D: 15
209022...	B10-I: 33
209023...	B10-I: 33
209024...	B10-I: 33
209025...	B10-I: 33
209026...	B10-I: 33
209027...	B10-I: 33
209028...	B10-I: 33
209043...	B10-G: 15
209044...	B10-I: 7
209045...	B10-I: 7
209054...	B10-I: 13
209055...	B10-I: 13
209056...	B10-I: 13
209057...	B10-I: 13
209058...	B10-I: 13
209059...	B10-I: 13
209060...	B10-G: 15
209080...	B10-I: 6
209081...	B10-I: 6
209082...	B10-I: 4
209083...	B10-I: 4
209088...	B10-I: 3
209089...	B10-I: 3
209090...	B10-I: 3
209091...	B10-I: 3
209098...	B10-I: 7
209099...	B10-I: 7
210020...	B10-B: 6, B10-B: 19, B10-B: 24, B10-B: 25, B10-B: 30, B10-B: 31, B10-G: 10, B10-G: 11
210052...	B10-B: 12, B10-B: 18, B10-B: 24
210059...	B10-B: 12, B10-B: 24
210062...	B10-B: 12, B10-B: 18, B10-B: 24
210063...	B10-B: 6, B10-B: 19, B10-B: 24, B10-B: 25, B10-B: 30, B10-B: 31, B10-G: 10, B10-G: 11
210064...	B10-B: 6, B10-B: 19, B10-B: 24, B10-B: 25, B10-B: 30, B10-B: 31, B10-G: 10, B10-G: 11
210069...	B10-B: 12, B10-B: 24

Part No.	Page
211061...	B10-B: 7, B10-B: 14, B10-B: 20, B10-B: 26, B10-B: 32, B10-G: 20
211063...	B10-B: 7, B10-B: 14, B10-B: 20, B10-B: 26, B10-B: 32, B10-G: 20
211065...	B10-B: 7, B10-B: 14, B10-B: 20, B10-B: 26, B10-B: 32, B10-G: 20
214462...	B10-B: 27
215101...	B10-B: 33, B10-G: 20
215102...	B10-B: 33, B10-G: 20
215105...	B10-B: 33, B10-G: 20
215111...	B10-D: 23
215149...	B10-L: 10
215150...	B10-A: 58, B10-A: 72, B10-H: 29, B10-L: 10, B10-M: 6
215189...	B10-M: 4
215250...	B10-L: 10
215254...	B10-A: 47, B10-A: 71
215265...	B10-L: 10
215323...	B10-B: 15, B10-B: 27
215338...	B10-B: 15, B10-B: 21, B10-B: 27
215343...	B10-L: 10
215346...	B10-D: 23
215374...	B10-D: 23
215375...	B10-M: 3
215376...	B10-M: 3
215377...	B10-A: 19, B10-A: 72
215431...	B10-L: 10
215461...	B10-L: 10
215462...	B10-B: 15, B10-B: 21, B10-B: 27, B10-B: 33
215467...	B10-L: 10
215472...	B10-A: 19, B10-A: 72, B10-L: 10, B10-M: 6
215473...	B10-A: 58, B10-L: 10, B10-M: 6
215483...	B10-A: 18, B10-B: 8, B10-B: 33, B10-G: 21
215501...	B10-C: 7

Part No.	Page
215509...	B10-G: 25
215608...	B10-I: 33
215609...	B10-I: 33
215610...	B10-I: 33
215611...	B10-I: 33
215612...	B10-I: 33
215634...	B10-L: 10
215638...	B10-M: 6
215639...	B10-M: 6
215674...	B10-A: 19, B10-A: 72
215701...	B10-I: 33
215702...	B10-I: 33
215703...	B10-I: 33
215704...	B10-I: 33
215705...	B10-I: 33
215726...	B10-F: 14
215727...	B10-F: 14
215728...	B10-F: 14
215742...	B10-L: 10
215922...	B10-I: 30
215924...	B10-I: 30
215925...	B10-I: 30
215926...	B10-F: 14, B10-I: 30
215927...	B10-I: 39
215929...	B10-I: 39
215930...	B10-I: 39
215931...	B10-F: 15, B10-I: 39
218012...	B10-A: 8
218014...	B10-A: 8
218029...	B10-A: 9, B10-A: 41
218030...	B10-A: 9, B10-A: 41
218031...	B10-A: 9, B10-A: 41
218032...	B10-A: 9, B10-A: 41
218033...	B10-A: 9, B10-A: 41
218034...	B10-A: 9, B10-A: 41
218037...	B10-A: 9, B10-A: 41
218038...	B10-A: 9, B10-A: 41
218039...	B10-A: 9, B10-A: 41
218040...	B10-A: 9, B10-A: 41
218041...	B10-A: 9, B10-A: 41
218042...	B10-A: 9, B10-A: 41
218043...	B10-A: 9, B10-A: 41
218044...	B10-A: 9, B10-A: 41
218045...	B10-A: 9, B10-A: 41
218046...	B10-A: 9, B10-A: 41
218047...	B10-A: 8
218048...	B10-A: 8
218049...	B10-A: 8
218050...	B10-A: 8
218051...	B10-A: 8
218052...	B10-A: 8
218053...	B10-A: 8
218058...	B10-A: 8
218059...	B10-A: 8
218060...	B10-A: 8
218061...	B10-A: 8
218062...	B10-A: 8
218063...	B10-A: 8
218064...	B10-A: 8
218071...	B10-A: 8
218072...	B10-A: 9, B10-A: 40
218074...	B10-A: 32
218075...	B10-A: 32
218076...	B10-A: 32
218077...	B10-A: 32
218079...	B10-A: 32
218080...	B10-A: 32
218081...	B10-A: 32
218082...	B10-A: 32
218083...	B10-A: 32
218084...	B10-A: 32
218088...	B10-J: 4
218089...	B10-J: 8, B10-J: 10
219030...	B10-E: 8
219031...	B10-E: 9
219032...	B10-E: 8
219033...	B10-E: 9
219034...	B10-E: 8
219035...	B10-E: 8
219036...	B10-E: 8
219037...	B10-E: 8
219038...	B10-E: 8
219039...	B10-E: 8
219040...	B10-E: 8
219041...	B10-E: 8
219042...	B10-E: 9
219043...	B10-E: 12
219044...	B10-E: 12
219051...	B10-E: 8
219052...	B10-E: 8
219053...	B10-E: 9
219054...	B10-E: 9
219055...	B10-E: 11
219056...	B10-E: 11
219057...	B10-E: 11
219058...	B10-E: 11
219059...	B10-E: 11
219060...	B10-E: 11
219061...	B10-E: 12
219062...	B10-E: 12
219063...	B10-E: 12
219066...	B10-E: 9
219068...	B10-E: 12
219076...	B10-I: 11
219077...	B10-I: 11
219082...	B10-E: 12
219083...	B10-E: 12
219084...	B10-E: 12
219085...	B10-E: 8
219086...	B10-E: 8
219087...	B10-E: 8
219088...	B10-E: 8
219089...	B10-E: 9
219090...	B10-E: 9
219091...	B10-E: 9
219092...	B10-E: 9
219093...	B10-E: 11
219094...	B10-E: 12
219095...	B10-E: 12
219096...	B10-E: 12
219168...	B10-A: 33, B10-E: 6
219169...	B10-A: 33, B10-E: 6
219170...	B10-I: 11
219171...	B10-I: 11
219172...	B10-I: 11
219173...	B10-I: 11
219174...	B10-I: 11
219175...	B10-I: 11
219176...	B10-A: 33, B10-E: 6
219177...	B10-A: 33, B10-E: 6
219185...	B10-A: 33, B10-E: 6
226011...	B10-D: 19
226012...	B10-D: 19
226013...	B10-D: 19
226014...	B10-G: 14
226030...	B10-D: 19
226031...	B10-D: 19, B10-G: 14
227001...	B10-F: 5
227002...	B10-F: 5
227003...	B10-F: 5
227004...	B10-F: 5
227005...	B10-F: 5
227006...	B10-F: 5
227007...	B10-F: 5
227008...	B10-F: 5
227009...	B10-F: 5
227010...	B10-F: 5
227011...	B10-F: 5
227012...	B10-F: 5
227014...	B10-F: 5
228003...	B10-I: 4
228004...	B10-I: 4
228006...	B10-I: 4
228007...	B10-I: 4
228014...	B10-I: 2
228020...	B10-I: 4
228021...	B10-I: 4
228022...	B10-I: 2
228023...	B10-I: 2
228024...	B10-I: 2
228025...	B10-I: 2
228026...	B10-I: 2
231005...	B10-I: 7
231006...	B10-I: 7
231007...	B10-I: 7
233001...	B10-I: 36
233002...	B10-I: 36
233003...	B10-I: 36
233004...	B10-I: 36
233005...	B10-I: 36
233006...	B10-I: 36
233007...	B10-I: 36
233008...	B10-I: 36
233009...	B10-I: 36
233020...	B10-I: 37
233021...	B10-I: 37
233022...	B10-I: 37
233023...	B10-I: 37
233024...	B10-I: 37
233025...	B10-I: 37
233026...	B10-I: 37
233027...	B10-I: 37
233028...	B10-I: 37
233040...	B10-I: 38
233041...	B10-I: 38
233042...	B10-I: 38
233043...	B10-I: 38
233044...	B10-I: 38
233045...	B10-I: 38
233046...	B10-I: 38
233047...	B10-I: 38
233048...	B10-I: 38
233070...	B10-I: 35
233071...	B10-I: 35
233072...	B10-I: 35
233073...	B10-I: 35
233074...	B10-I: 35
233075...	B10-I: 35
233076...	B10-I: 35
235001...	B10-D: 5
235002...	B10-D: 5
235003...	B10-D: 5
235011...	B10-D: 5
235012...	B10-D: 5
235013...	B10-D: 5
235021...	B10-D: 5
235022...	B10-D: 5
235023...	B10-D: 5
235031...	B10-D: 5
235032...	B10-D: 5
235033...	B10-D: 5
236020...	B10-A: 14, B10-A: 18
236021...	B10-A: 12
236022...	B10-A: 12
236023...	B10-A: 12
236024...	B10-A: 12
236025...	B10-A: 12
236031...	B10-A: 12
236071...	B10-A: 7, B10-A: 39
236081...	B10-A: 15, B10-A: 45, B10-A: 69
236082...	B10-A: 15, B10-A: 45, B10-A: 69
236083...	B10-A: 15, B10-A: 45, B10-A: 69
236084...	B10-A: 15, B10-A: 45, B10-A: 69
236088...	B10-A: 15, B10-A: 18, B10-A: 45, B10-A: 47
236089...	B10-A: 15, B10-A: 18, B10-A: 45, B10-A: 47
236120...	B10-A: 18, B10-A: 47
245011...	B10-F: 4
245012...	B10-F: 4
245013...	B10-F: 4
245014...	B10-F: 4
245015...	B10-F: 4
245016...	B10-F: 4
246004...	B10-F: 4
246009...	B10-F: 4
246010...	B10-F: 4
246012...	B10-F: 4
246013...	B10-F: 4
246014...	B10-F: 4
246015...	B10-F: 4
246016...	B10-F: 4
246017...	B10-F: 4
246018...	B10-F: 4
246019...	B10-F: 4
246020...	B10-F: 4
246021...	B10-F: 4
246022...	B10-F: 4
246023...	B10-F: 4
248001...	B10-A: 30
248002...	B10-A: 30
248003...	B10-A: 30
248051...	B10-A: 30
248052...	B10-A: 30
248053...	B10-A: 30
248054...	B10-A: 30
248055...	B10-A: 30
248056...	B10-A: 30
248063...	B10-A: 32
248064...	B10-A: 32
248065...	B10-A: 32
248071...	B10-A: 31
248136...	B10-A: 34, B10-F: 2
248137...	B10-A: 34, B10-F: 2
248138...	B10-A: 34, B10-F: 2
248142...	B10-A: 34, B10-F: 2
248143...	B10-A: 34, B10-F: 2
248144...	B10-A: 34, B10-F: 2
248145...	B10-A: 34, B10-F: 2
248147...	B10-A: 33, B10-E: 7
248148...	B10-A: 33, B10-E: 7
248149...	B10-A: 33, B10-E: 7
251001...	B10-D: 20
251002...	B10-D: 20
251003...	B10-D: 20
251004...	B10-D: 20
251005...	B10-D: 20
251006...	B10-D: 20
251007...	B10-D: 20
251008...	B10-D: 20
251009...	B10-D: 20
251010...	B10-G: 13
251011...	B10-G: 13
252090...	B10-F: 4
252091...	B10-F: 4
258021...	B10-G: 16
258061...	B10-G: 16
258098...	B10-G: 16
259080...	B10-F: 8
259081...	B10-F: 10
259082...	B10-F: 10
259084...	B10-F: 12
262002...	B10-F: 14
262003...	B10-F: 14
262004...	B10-F: 14
262005...	B10-F: 14
262006...	B10-F: 14
262007...	B10-F: 14
264051...	B10-B: 12
264077...	B10-B: 12
268009...	B10-D: 14
268010...	B10-D: 14
268019...	B10-D: 14
268020...	B10-D: 14

Part No.	Page
268021...	B10-D: 14
268022...	B10-D: 14
268023...	B10-D: 14
271004...	B10-I: 34
271005...	B10-I: 34
271008...	B10-I: 34
271018...	B10-I: 34
271045...	B10-I: 34
271046...	B10-I: 34
271047...	B10-I: 34
271049...	B10-I: 34
271050...	B10-I: 34
271051...	B10-I: 34
271052...	B10-I: 34
271070...	B10-I: 34
271073...	B10-I: 34
271074...	B10-I: 34
271075...	B10-I: 34
271190...	B10-I: 10
271191...	B10-I: 10
271192...	B10-I: 10
271193...	B10-I: 10
271194...	B10-I: 10
271195...	B10-I: 10
271196...	B10-I: 10
271197...	B10-I: 10
271198...	B10-I: 10
271199...	B10-I: 10
271200...	B10-I: 10
271201...	B10-I: 10
271202...	B10-I: 10
271203...	B10-I: 10
271204...	B10-I: 10
271205...	B10-I: 10
271206...	B10-I: 10
271207...	B10-I: 10
271208...	B10-I: 10
271209...	B10-I: 10
271210...	B10-I: 10
271211...	B10-I: 10
275001...	B10-I: 29
275003...	B10-I: 29
275014...	B10-I: 31
275015...	B10-I: 31
275016...	B10-I: 31
275017...	B10-I: 31
275018...	B10-I: 31
275019...	B10-I: 31
275020...	B10-I: 31
275021...	B10-I: 31
275022...	B10-I: 31
275023...	B10-I: 31
275024...	B10-I: 31
275025...	B10-I: 31
275026...	B10-I: 31
275027...	B10-I: 31
275028...	B10-I: 31
275029...	B10-I: 31
275030...	B10-I: 31
275031...	B10-I: 31
275032...	B10-I: 31
275033...	B10-I: 31
275034...	B10-I: 31
275035...	B10-I: 31
275036...	B10-I: 31
275040...	B10-I: 31
275041...	B10-I: 31
275042...	B10-I: 31
275043...	B10-I: 31
275044...	B10-I: 31
275045...	B10-I: 31
275046...	B10-I: 31
275047...	B10-I: 31
275048...	B10-I: 31
275049...	B10-I: 31
275050...	B10-I: 31
275051...	B10-I: 31
275052...	B10-I: 31
275053...	B10-I: 31
275054...	B10-I: 31
275055...	B10-I: 31
275056...	B10-I: 31
275057...	B10-I: 31
275058...	B10-I: 31
275059...	B10-I: 31
275060...	B10-I: 31
275061...	B10-I: 31
275062...	B10-I: 31
275063...	B10-I: 31
275064...	B10-I: 31
275065...	B10-I: 31
275066...	B10-I: 31
275067...	B10-I: 31
275068...	B10-I: 31
275069...	B10-I: 31
275070...	B10-I: 31
275071...	B10-I: 31
275072...	B10-I: 31
275073...	B10-I: 31
275074...	B10-I: 31
275075...	B10-I: 31
275076...	B10-I: 31
275077...	B10-I: 31
275078...	B10-I: 31
275079...	B10-I: 31
275080...	B10-I: 31
275081...	B10-I: 31
275082...	B10-I: 31
275083...	B10-I: 31
275084...	B10-I: 31
276001...	B10-I: 29
276005...	B10-I: 31
276006...	B10-I: 31
276007...	B10-I: 31
276008...	B10-I: 31
276009...	B10-I: 31
276010...	B10-I: 31
276011...	B10-I: 31
276012...	B10-I: 31
276013...	B10-I: 31
276014...	B10-I: 31
276015...	B10-I: 31
276016...	B10-I: 31
276017...	B10-I: 31
276018...	B10-I: 31
276019...	B10-I: 31
276020...	B10-I: 31
276021...	B10-I: 31
276022...	B10-I: 31
276023...	B10-I: 31
276024...	B10-I: 31
276025...	B10-I: 31
276026...	B10-I: 31
276027...	B10-I: 31
276028...	B10-I: 31
276029...	B10-I: 31
276030...	B10-I: 31
276031...	B10-I: 31
276032...	B10-I: 31
276033...	B10-I: 31
276034...	B10-I: 31
276035...	B10-I: 31
276036...	B10-I: 31
276037...	B10-I: 31
276038...	B10-I: 31
276039...	B10-I: 31
276040...	B10-I: 31
276041...	B10-I: 31
276042...	B10-I: 31
276043...	B10-I: 31
276044...	B10-I: 31
276045...	B10-I: 31
276046...	B10-I: 31
276047...	B10-I: 31
276048...	B10-I: 31
276049...	B10-I: 31
276050...	B10-I: 31
276051...	B10-I: 31
276052...	B10-I: 31
276053...	B10-I: 31
276054...	B10-I: 31
276055...	B10-I: 31
276056...	B10-I: 31
276057...	B10-I: 31
276059...	B10-I: 31
276060...	B10-I: 31
276061...	B10-I: 31
277001...	B10-I: 30
277002...	B10-I: 30
277005...	B10-I: 30
277006...	B10-I: 30
277007...	B10-I: 30
277008...	B10-I: 30
277010...	B10-I: 32
277011...	B10-I: 32
277012...	B10-I: 32
277013...	B10-I: 32
277014...	B10-I: 32
277015...	B10-I: 32
277016...	B10-I: 32
277017...	B10-I: 32
277018...	B10-I: 32
277019...	B10-I: 32
277020...	B10-I: 32
277021...	B10-I: 32
277022...	B10-I: 32
277023...	B10-I: 32
277024...	B10-I: 32
277025...	B10-I: 32
277026...	B10-I: 32
277027...	B10-I: 32
277028...	B10-I: 32
277029...	B10-I: 32
277030...	B10-I: 32
277031...	B10-I: 32
277032...	B10-I: 32
277033...	B10-I: 32
277034...	B10-I: 32
277035...	B10-I: 32
277036...	B10-I: 32
277037...	B10-I: 32
277038...	B10-I: 32
277039...	B10-I: 32
277040...	B10-I: 32
277041...	B10-I: 32
277042...	B10-I: 32
277043...	B10-I: 32
277044...	B10-I: 32
277045...	B10-I: 32
277046...	B10-I: 32
277047...	B10-I: 32
277048...	B10-I: 32
277049...	B10-I: 32
277050...	B10-I: 32
277051...	B10-I: 32
277055...	B10-I: 32
277056...	B10-I: 32
277057...	B10-I: 32
277058...	B10-I: 32
277059...	B10-I: 32
277060...	B10-I: 32
277061...	B10-I: 32
277062...	B10-I: 32
277063...	B10-I: 32
277064...	B10-I: 32
277065...	B10-I: 32
277066...	B10-I: 32
277067...	B10-I: 32
277068...	B10-I: 32
277069...	B10-I: 32
277070...	B10-I: 32
277071...	B10-I: 32
277072...	B10-I: 32
277073...	B10-I: 32
277074...	B10-I: 32
277075...	B10-I: 32
277076...	B10-I: 32
277077...	B10-I: 32
277078...	B10-I: 32
277079...	B10-I: 32
277080...	B10-I: 32
277081...	B10-I: 32
277082...	B10-I: 32
277083...	B10-I: 32
277084...	B10-I: 32
277085...	B10-I: 32
277086...	B10-I: 32
277087...	B10-I: 32
277088...	B10-I: 32
277089...	B10-I: 32
278001...	B10-F: 14, B10-I: 30
278002...	B10-I: 30
278005...	B10-I: 32
278006...	B10-I: 32
278007...	B10-I: 32
278008...	B10-I: 32
278009...	B10-I: 32
278010...	B10-I: 32
278011...	B10-I: 32
278012...	B10-I: 32
278013...	B10-I: 32
278014...	B10-I: 32
278015...	B10-I: 32
278016...	B10-I: 32
278017...	B10-I: 32
278018...	B10-I: 32
278019...	B10-I: 32
278020...	B10-I: 32
278021...	B10-I: 32
278022...	B10-I: 32
278023...	B10-I: 32
278024...	B10-I: 32
278025...	B10-I: 32
278026...	B10-I: 32
278027...	B10-I: 32
278028...	B10-I: 32
278029...	B10-F: 15, B10-I: 32
278030...	B10-I: 32
278031...	B10-I: 32
278032...	B10-I: 32
278033...	B10-I: 32
278034...	B10-I: 32
278035...	B10-F: 15, B10-I: 32
278036...	B10-I: 32
278037...	B10-I: 32
278038...	B10-I: 32
278039...	B10-F: 15, B10-I: 32
278040...	B10-I: 32
278041...	B10-I: 32
278042...	B10-I: 32
278043...	B10-I: 32
278044...	B10-I: 32
278045...	B10-F: 15, B10-I: 32
278046...	B10-I: 32
278047...	B10-I: 32
278048...	B10-I: 32
278049...	B10-I: 32
278050...	B10-I: 32
278051...	B10-I: 32
297164...	B10-H: 24
297165...	B10-H: 24
297192...	B10-H: 24
297234...	B10-H: 24
297239...	B10-H: 22
297240...	B10-H: 22
297241...	B10-H: 22
297242...	B10-H: 22
297248...	B10-H: 22
297249...	B10-H: 24
297259...	B10-H: 17
297260...	B10-H: 17
297262...	B10-H: 17
297264...	B10-H: 17
297290...	B10-H: 25
297291...	B10-H: 25
297293...	B10-H: 25
297294...	B10-H: 25
297303...	B10-H: 25
297306...	B10-H: 25
297377...	B10-H: 22
297387...	B10-H: 20
297419...	B10-H: 25
297434...	B10-H: 20
297483...	B10-H: 24
297485...	B10-H: 20
297486...	B10-H: 25
297497...	B10-H: 28
297501...	B10-H: 24
297502...	B10-H: 24
297531...	B10-H: 22
297533...	B10-H: 24
297534...	B10-H: 20
297535...	B10-H: 28
297537...	B10-H: 20
297541...	B10-H: 16

Part No.	Page
297542...	B10-H: 16
297545...	B10-H: 21
297546...	B10-H: 21
297547...	B10-H: 21
297548...	B10-H: 21
297550...	B10-H: 20
297557...	B10-H: 20
297558...	B10-H: 20
297559...	B10-H: 22
297560...	B10-H: 22
297561...	B10-H: 24
297578...	B10-H: 24
297588...	B10-H: 22
297604...	B10-H: 18
297653...	B10-H: 22
297658...	B10-H: 22
297659...	B10-H: 25
297660...	B10-H: 25
297692...	B10-H: 17
297721...	B10-H: 26
297724...	B10-H: 20
297725...	B10-H: 20
297780...	B10-H: 17
297782...	B10-H: 17
297787...	B10-H: 25
297788...	B10-H: 25
297790...	B10-H: 25
297833...	B10-H: 20
297845...	B10-H: 17
297870...	B10-H: 24
297871...	B10-H: 24
297872...	B10-H: 24
297878...	B10-H: 22
297891...	B10-H: 20
297937...	B10-H: 31
297938...	B10-H: 31
297939...	B10-H: 31
297940...	B10-H: 31
297941...	B10-H: 31
297942...	B10-H: 31
297943...	B10-H: 31
297944...	B10-H: 31
297945...	B10-H: 31
297946...	B10-H: 31
297947...	B10-H: 31
297958...	B10-H: 22
297980...	B10-H: 21
297993...	B10-H: 18
297994...	B10-H: 21
297995...	B10-H: 21
297996...	B10-H: 28
297997...	B10-H: 28
299001...	B10-F: 3
299002...	B10-F: 3
299003...	B10-F: 3
299004...	B10-F: 3
299005...	B10-F: 3
299006...	B10-F: 3
299007...	B10-F: 3
299008...	B10-F: 3
299009...	B10-F: 3
397164...	B10-H: 23
3	
259079...	B10-F: 8
309001...	B10-G: 15
309041...	B10-G: 15
309043...	B10-G: 15
310001...	B10-B: 24

Part No.	Page
310003...	B10-B: 24
310004...	B10-B: 24
310005...	B10-B: 24
310006...	B10-B: 24
310007...	B10-B: 25
310008...	B10-B: 25
310009...	B10-B: 25
310010...	B10-B: 24
310020...	B10-B: 24
310070...	B10-B: 26
310071...	B10-B: 26
310074...	B10-B: 26
310075...	B10-B: 26
315015...	B10-I: 30
315016...	B10-I: 30
315017...	B10-I: 30
315018...	B10-I: 30
315155...	B10-A: 18, B10-A: 47, B10-A: 71
315156...	B10-A: 18, B10-A: 47, B10-A: 71
315186...	B10-G: 22, B10-G: 25, B10-M: 4
315234...	B10-F: 14
315235...	B10-F: 14
315248...	B10-A: 19, B10-A: 71
315265...	B10-M: 6
315279...	B10-B: 27
315320...	B10-H: 35
315322...	B10-H: 35, B10-M: 6
315323...	B10-H: 19
315355...	B10-G: 14
315403...	B10-G: 25
315415...	B10-G: 25
315476...	B10-L: 10
315629...	B10-A: 35
315637...	B10-I: 39
315684...	B10-A: 35
315687...	B10-A: 35
315689...	B10-I: 39, B10-M: 6
315690...	B10-M: 6
315691...	B10-I: 39, B10-M: 6
315788...	B10-I: 9
315789...	B10-I: 9
315790...	B10-I: 9
315801...	B10-A: 35
315943...	B10-B: 15, B10-B: 21
319002...	B10-E: 13
319003...	B10-E: 13
319004...	B10-E: 13
319005...	B10-E: 13
319006...	B10-E: 13
319007...	B10-E: 13
319008...	B10-E: 13
319009...	B10-E: 13
319010...	B10-A: 7, B10-A: 39
319013...	B10-E: 10
319016...	B10-E: 13
319017...	B10-E: 13
319018...	B10-E: 13
319019...	B10-E: 13

Part No.	Page
319021...	B10-E: 13
319022...	B10-E: 13
319023...	B10-E: 13
326062...	B10-G: 18
326082...	B10-G: 18
326083...	B10-G: 17
326084...	B10-G: 18
327001...	B10-F: 8
327002...	B10-F: 8
327003...	B10-F: 8
327004...	B10-F: 8
327005...	B10-F: 8
327006...	B10-F: 8
327007...	B10-F: 8
327010...	B10-F: 8
327011...	B10-F: 8
327012...	B10-F: 10
327013...	B10-F: 10
327016...	B10-F: 10
327017...	B10-F: 8
327018...	B10-F: 8
327019...	B10-F: 10
327020...	B10-F: 10
327021...	B10-F: 10
327022...	B10-F: 10
327023...	B10-F: 10
327024...	B10-F: 10
327025...	B10-F: 8
327026...	B10-F: 8
327027...	B10-F: 8
327028...	B10-F: 8
327033...	B10-F: 8
327034...	B10-F: 8
337105...	B10-B: 33, B10-G: 20
345001...	B10-L: 6
345002...	B10-L: 6
345003...	B10-L: 6
345004...	B10-L: 6
345005...	B10-L: 6
345006...	B10-L: 6
345007...	B10-L: 6
345008...	B10-L: 6
345009...	B10-L: 6
345010...	B10-L: 6
345011...	B10-L: 6
345012...	B10-L: 6
345013...	B10-L: 6
345014...	B10-L: 6
345015...	B10-L: 7
345016...	B10-L: 7
345017...	B10-L: 7
345018...	B10-L: 7
345019...	B10-L: 7
345020...	B10-L: 8
345021...	B10-L: 8
345022...	B10-L: 8
345023...	B10-L: 8
345024...	B10-L: 8
345025...	B10-L: 8
345030...	B10-L: 2
345031...	B10-L: 2
345032...	B10-L: 2
345033...	B10-L: 2
345034...	B10-L: 3
345035...	B10-L: 3
345036...	B10-L: 3
345037...	B10-L: 3

Part No.	Page
345040...	B10-L: 2
345041...	B10-L: 2
345042...	B10-L: 2
345043...	B10-L: 2
345044...	B10-L: 3
345045...	B10-L: 3
345046...	B10-L: 3
345047...	B10-L: 3
345201...	B10-L: 10
345202...	B10-L: 10
345203...	B10-L: 10
345204...	B10-L: 10
345208...	B10-L: 10
345211...	B10-L: 10
345213...	B10-L: 10
345215...	B10-L: 10
345216...	B10-L: 10
345218...	B10-L: 10
345220...	B10-L: 10
345221...	B10-L: 10
345222...	B10-L: 10
345223...	B10-L: 10
345224...	B10-L: 10
345225...	B10-L: 10
348007...	B10-D: 14
348009...	B10-D: 19
349005...	B10-G: 6
349006...	B10-G: 6
349009...	B10-D: 14
349010...	B10-G: 22
349011...	B10-G: 22
349012...	B10-G: 22
349013...	B10-G: 22
349014...	B10-G: 6
349015...	B10-G: 6
349016...	B10-G: 23
349017...	B10-G: 23
349021...	B10-G: 4
349022...	B10-G: 4
349023...	B10-G: 4
349024...	B10-G: 4
349031...	B10-G: 7
349032...	B10-G: 7
349033...	B10-G: 7
349034...	B10-G: 7
349035...	B10-G: 7
349036...	B10-G: 7
349037...	B10-G: 7
349038...	B10-G: 7
349043...	B10-G: 25
349051...	B10-G: 5
349052...	B10-G: 5
349053...	B10-G: 5
349054...	B10-G: 5
349201...	B10-G: 25
349202...	B10-G: 25
353064...	B10-F: 7
353065...	B10-F: 7
353066...	B10-F: 7
353067...	B10-F: 7
353068...	B10-F: 7
353069...	B10-F: 7
353070...	B10-F: 9
353071...	B10-F: 9
353072...	B10-F: 9
353073...	B10-F: 9
353074...	B10-F: 9
353075...	B10-F: 9

Part No.	Page
358015...	B10-G: 16
364030...	B10-B: 12
364031...	B10-B: 12
364077...	B10-B: 12, B10-B: 24
364138...	B10-B: 15, B10-B: 27
364139...	B10-B: 15, B10-B: 27
364260...	B10-B: 15, B10-B: 27
364270...	B10-B: 15, B10-B: 27
387112...	B10-I: 12
387113...	B10-I: 12
387114...	B10-I: 12
387115...	B10-I: 12
387116...	B10-I: 12
397110...	B10-H: 28
397118...	B10-H: 20
397133...	B10-H: 17
397146...	B10-H: 17
397165...	B10-H: 23
397166...	B10-H: 23
397167...	B10-H: 23
397168...	B10-H: 23
397191...	B10-H: 23
397192...	B10-H: 17
397235...	B10-H: 26
397237...	B10-H: 15
397244...	B10-H: 24
397251...	B10-H: 24
397252...	B10-H: 24
397257...	B10-H: 24
397260...	B10-H: 25
397261...	B10-H: 25
397270...	B10-H: 27
397271...	B10-H: 27
397272...	B10-H: 27
397273...	B10-H: 27
397274...	B10-H: 27
397301...	B10-H: 17
397352...	B10-H: 20
397354...	B10-H: 20
397355...	B10-H: 20
397356...	B10-H: 20
397357...	B10-H: 20
397439...	B10-H: 25
397585...	B10-H: 23
397586...	B10-H: 23
397587...	B10-H: 23
397588...	B10-H: 23
397589...	B10-H: 23
397590...	B10-H: 28
397593...	B10-H: 29
397594...	B10-H: 29
397595...	B10-H: 29
397610...	B10-H: 17
397614...	B10-H: 22
397632...	B10-H: 22
397640...	B10-H: 28
397654...	B10-H: 18
397662...	B10-H: 21
397663...	B10-H: 18
397666...	B10-H: 22
397672...	B10-H: 16
397673...	B10-H: 16
397674...	B10-H: 16

Part No.	Page
397675...	B10-H: 14
397676...	B10-H: 14
397688...	B10-H: 16
397689...	B10-H: 16
397702...	B10-H: 23
397703...	B10-H: 28
397704...	B10-H: 28
397705...	B10-H: 28
397709...	B10-H: 28
397710...	B10-H: 28
397737...	B10-H: 21
397738...	B10-H: 21
397739...	B10-H: 21
397740...	B10-H: 21
397741...	B10-H: 28
397742...	B10-H: 21
397763...	B10-H: 15
397764...	B10-H: 16
397765...	B10-H: 20
397766...	B10-H: 22
397767...	B10-H: 22
397768...	B10-H: 22
397769...	B10-H: 18
397770...	B10-H: 18
397771...	B10-H: 18
397772...	B10-H: 18
397783...	B10-H: 26
397784...	B10-H: 26
397785...	B10-H: 26
397786...	B10-H: 26
397787...	B10-H: 26
397788...	B10-H: 26
397809...	B10-H: 26
397810...	B10-H: 26
397816...	B10-H: 26
397817...	B10-H: 26
397844...	B10-H: 29
4	
401003...	B10-C: 5, B10-C: 7
401004...	B10-C: 5, B10-C: 7
401005...	B10-C: 5, B10-C: 7
401006...	B10-C: 5, B10-C: 7
401007...	B10-C: 5, B10-C: 7
401008...	B10-C: 5, B10-C: 7
401009...	B10-C: 5, B10-C: 7
401010...	B10-C: 5, B10-C: 7
401011...	B10-C: 5, B10-C: 7
401204...	B10-C: 7
401205...	B10-C: 7
401206...	B10-C: 7
401207...	B10-C: 7
401208...	B10-C: 7
401209...	B10-C: 7
401210...	B10-C: 7
401223...	B10-C: 7
401224...	B10-C: 7
401225...	B10-C: 7
401226...	B10-C: 7
401227...	B10-C: 7
401230...	B10-C: 7
401323...	B10-C: 7
401324...	B10-C: 7
401327...	B10-C: 7
401329...	B10-C: 7
402001...	B10-C: 5
402005...	B10-C: 5
402011...	B10-C: 5
402013...	B10-C: 5
402017...	B10-C: 5
402019...	B10-C: 5
402021...	B10-C: 5
402025...	B10-C: 5
402026...	B10-C: 5
402029...	B10-C: 5
410001...	B10-B: 4
410002...	B10-B: 4
415111...	B10-D: 23
415112...	B10-A: 19, B10-A: 71, B10-D: 23
415113...	B10-D: 23
415121...	B10-M: 6
415127...	B10-F: 14
415164...	B10-L: 10
415165...	B10-L: 10, B10-M: 6
415181...	B10-G: 25
415244...	B10-A: 18, B10-A: 35, B10-A: 47, B10-A: 71
415280...	B10-L: 10
415283...	B10-M: 5
415284...	B10-M: 5
415285...	B10-M: 5
415286...	B10-M: 5
415287...	B10-M: 5
415298...	B10-L: 10
415299...	B10-L: 10
415334...	B10-M: 2, B10-M: 3
415335...	B10-M: 2
415336...	B10-M: 2, B10-M: 3
415337...	B10-M: 2
415341...	B10-M: 5
415342...	B10-B: 26
415353...	B10-A: 72
415357...	B10-I: 29
415358...	B10-I: 29
415359...	B10-I: 29
415360...	B10-B: 26
415373...	B10-I: 39
415374...	B10-I: 39
415375...	B10-I: 39
415386...	B10-A: 19, B10-A: 71
415507...	B10-A: 19, B10-A: 58, B10-A: 72, B10-H: 14, B10-H: 15, B10-M: 6
415508...	B10-A: 19, B10-A: 58, B10-A: 72, B10-H: 16, B10-H: 17, B10-M: 6
415510...	B10-H: 29, B10-M: 6
415514...	B10-A: 19, B10-A: 58, B10-A: 72, B10-H: 20, B10-H: 21, B10-H: 22, B10-H: 23, B10-H: 24, B10-H: 25, B10-M: 6
415543...	B10-H: 20, B10-H: 21, B10-H: 22, B10-H: 23, B10-H: 29, B10-M: 6
415573...	B10-M: 5
415577...	B10-A: 58, B10-I: 12, B10-L: 10, B10-M: 6
415578...	B10-A: 58, B10-M: 6
415579...	B10-M: 6
415580...	B10-M: 6
415611...	B10-M: 6
415636...	B10-G: 25
415761...	B10-M: 6
415895...	B10-A: 58, B10-A: 72, B10-B: 21
415896...	B10-A: 58, B10-A: 72, B10-B: 21
415898...	B10-G: 25
415900...	B10-B: 33, B10-G: 20
415913...	B10-G: 25
415949...	B10-L: 10
415977...	B10-L: 10
450001...	B10-A: 38
450021...	B10-A: 42
450022...	B10-A: 42
450023...	B10-A: 42, B10-A: 43
450024...	B10-A: 43
450026...	B10-A: 40
450027...	B10-A: 40
450028...	B10-A: 40
450038...	B10-A: 40
450039...	B10-A: 40
450040...	B10-A: 42
450041...	B10-A: 42, B10-A: 43
450125...	B10-A: 43
450129...	B10-A: 17
450130...	B10-A: 17
450132...	B10-A: 17
450133...	B10-A: 17
450134...	B10-A: 17
450135...	B10-A: 17
450136...	B10-A: 17
450137...	B10-A: 13, B10-A: 16, B10-A: 44, B10-A: 46
464003...	B10-B: 5
464004...	B10-B: 5
464005...	B10-B: 5
464006...	B10-B: 6
464007...	B10-B: 6
464008...	B10-B: 6
464009...	B10-B: 6
464010...	B10-B: 6
464035...	B10-B: 12
464036...	B10-B: 13
464037...	B10-B: 13
464038...	B10-B: 13
464039...	B10-B: 13
464040...	B10-B: 13
5	
501001...	B10-A: 62
501004...	B10-A: 62
501005...	B10-A: 62
501016...	B10-A: 58, B10-A: 72, B10-B: 21
501019...	B10-A: 62
501050...	B10-A: 63
501051...	B10-A: 63
501052...	B10-A: 67
501053...	B10-A: 67
501054...	B10-A: 13, B10-A: 44, B10-A: 68
501055...	B10-A: 13, B10-A: 44, B10-A: 68
501056...	B10-A: 13, B10-A: 44, B10-A: 68
501058...	B10-A: 44, B10-A: 68
501059...	B10-A: 44, B10-A: 68
501060...	B10-A: 67
501061...	B10-A: 67
501064...	B10-A: 16, B10-A: 46, B10-A: 70
501065...	B10-A: 16, B10-A: 46, B10-A: 70
501066...	B10-A: 46, B10-A: 70
501067...	B10-A: 46, B10-A: 70
501157...	B10-A: 68
502001...	B10-A: 64
502002...	B10-A: 64
502003...	B10-A: 64
502004...	B10-A: 64
502005...	B10-A: 64
502012...	B10-A: 64
502013...	B10-A: 64
502014...	B10-A: 64
502015...	B10-A: 64
502016...	B10-A: 64
502023...	B10-A: 65
502024...	B10-A: 65
502025...	B10-A: 65
502026...	B10-A: 65
502027...	B10-A: 65
502034...	B10-A: 65
502035...	B10-A: 65
502036...	B10-A: 65
502037...	B10-A: 65
502038...	B10-A: 65
502045...	B10-A: 66
502046...	B10-A: 11, B10-A: 66
502047...	B10-A: 11, B10-A: 66
502048...	B10-A: 11, B10-A: 66
502049...	B10-A: 11, B10-A: 66
502050...	B10-A: 11, B10-A: 66
502051...	B10-A: 11, B10-A: 66
502052...	B10-A: 11
502053...	B10-A: 11
502054...	B10-A: 11
502055...	B10-A: 11
502056...	B10-A: 11
502057...	B10-A: 11
502058...	B10-A: 67
502059...	B10-A: 67
502060...	B10-A: 67
502061...	B10-A: 67
502062...	B10-A: 66
502064...	B10-A: 13, B10-A: 44, B10-A: 68
502066...	B10-A: 64
502068...	B10-A: 64
502069...	B10-A: 13, B10-A: 44, B10-A: 68
502070...	B10-A: 64
502071...	B10-A: 64
502072...	B10-A: 64
502073...	B10-A: 64
502074...	B10-A: 64
502075...	B10-A: 64
502076...	B10-A: 64
502077...	B10-A: 64
502078...	B10-A: 64
502079...	B10-A: 64
502080...	B10-A: 69, B10-A: 71
502081...	B10-A: 69, B10-A: 71
502082...	B10-A: 16, B10-A: 46, B10-A: 70
502088...	B10-A: 65
502089...	B10-A: 65
502090...	B10-A: 65
502091...	B10-A: 65
502092...	B10-A: 65
502093...	B10-A: 65
502094...	B10-A: 65
502095...	B10-A: 65
502096...	B10-A: 65
502097...	B10-A: 65
502165...	B10-A: 13, B10-A: 44, B10-A: 68
502180...	B10-A: 71
502183...	B10-A: 16, B10-A: 46, B10-A: 70
510001...	B10-A: 52
510114...	B10-A: 58
514003...	B10-A: 10, B10-A: 55
514004...	B10-A: 10,

Part No.	Page
	B10-A: 55
514005...	B10-A: 10
514006...	B10-A: 10
514007...	B10-A: 10
514008...	B10-A: 10
514009...	B10-A: 10
514010...	B10-A: 10
514011...	B10-A: 10
514012...	B10-A: 10
514015...	B10-A: 10, B10-A: 56
514016...	B10-A: 56
514017...	B10-A: 10
514019...	B10-A: 10
514021...	B10-A: 10
514023...	B10-A: 10
514025...	B10-A: 10
514027...	B10-A: 10
514029...	B10-A: 11
514030...	B10-A: 11
514031...	B10-A: 11
514032...	B10-A: 10, B10-A: 55
514033...	B10-A: 10, B10-A: 55
514034...	B10-A: 10, B10-A: 56
514035...	B10-A: 10, B10-A: 56
514201...	B10-A: 57
514202...	B10-A: 57
514203...	B10-A: 57
515166...	B10-A: 35
515178...	B10-B: 15, B10-B: 21
515286...	B10-A: 58
515491...	B10-A: 18, B10-B: 8, B10-B: 33, B10-G: 21
515535...	B10-I: 9
515595...	B10-B: 26
515596...	B10-B: 26
515675...	B10-I: 9
515676...	B10-I: 9
515677...	B10-I: 9
515678...	B10-I: 9
519002...	B10-E: 5
519003...	B10-E: 5
519004...	B10-E: 5
519005...	B10-E: 5
519006...	B10-E: 5
536001...	B10-A: 5
536002...	B10-A: 4
536005...	B10-A: 18
536015...	B10-A: 4, B10-A: 20, B10-A: 21, B10-A: 22, B10-A: 23, B10-B: 4, B10-B: 5, B10-B: 6, B10-B: 31, B10-G: 11, B10-L: 2
536016...	B10-A: 4, B10-A: 18, B10-A: 20, B10-A: 21, B10-A: 22, B10-A: 23, B10-B: 4, B10-B: 5, B10-B: 6, B10-B: 8, B10-B: 31, B10-B: 33, B10-G: 11, B10-G: 21, B10-L: 2, B10-L: 5
536017...	B10-L: 2
536018...	B10-L: 2
537051...	B10-B: 30, B10-G: 10
537052...	B10-B: 31, B10-G: 11
537055...	B10-G: 20
564034...	B10-B: 18
564045...	B10-B: 19
564046...	B10-B: 19
564047...	B10-B: 19
564048...	B10-B: 19
564049...	B10-B: 19
K	
K15282...	B10-I: 37
K15283...	B10-I: 37
K15284...	B10-I: 37
K15285...	B10-I: 37
K15286...	B10-I: 37
K16414...	B10-I: 36
K16415...	B10-I: 36
K16416...	B10-I: 36
K16417...	B10-I: 36
K16418...	B10-I: 36
K16419...	B10-I: 37
K16420...	B10-I: 37
K16421...	B10-I: 38
K16422...	B10-I: 38
K16423...	B10-I: 38
K16424...	B10-I: 38
K17847...	B10-I: 36
K18454...	B10-I: 36
K18455...	B10-I: 36
K18456...	B10-I: 37
K18457...	B10-I: 37
K22434...	B10-I: 38
K22436...	B10-I: 38
K22437...	B10-I: 38
K22438...	B10-I: 38
K22439...	B10-I: 36
K22440...	B10-I: 36
K23259...	B10-I: 36
K24276...	B10-I: 35
K24277...	B10-I: 35
K24278...	B10-I: 35
K24279...	B10-I: 35
K24280...	B10-I: 35
K24358...	B10-I: 35
K24391...	B10-I: 35
K31372...	B10-C: 6
K31373...	B10-C: 6
K31374...	B10-C: 6
K31375...	B10-C: 6
K31376...	B10-C: 6
K31377...	B10-C: 6
K31403...	B10-C: 6
K31404...	B10-C: 6
K31405...	B10-C: 6
K31406...	B10-C: 6
K31407...	B10-C: 6
K31408...	B10-C: 6
K31628...	B10-C: 6
K31630...	B10-C: 6
K31632...	B10-C: 6
K31634...	B10-C: 6
K32616...	B10-C: 6
K32618...	B10-C: 6
KW9208...	B10-J: 7
KW9209...	B10-J: 12
KW31562...	B10-M: 4
O	
OP-05T308...	B10-D: 21

Notes

Notes

Notes

Notes

Allied Machine & Engineering

Guaranteed Test / Demo Application Form

Distributor PO #	

The following must be filled out completely before your test will be considered

IMPORTANT: For processing, send Purchase Order to your Allied Field Sales Engineer (FSE). Please clearly mark the paperwork as "Test Order."

Distributor Information

Company Name: _____

Contact: _____

Account Number: _____

Phone: _____

Email: _____

End User Information

Company Name: _____

Contact: _____

Industry: _____

Phone: _____

Email: _____

Current Process

List all tooling, coatings, substrates, speeds and feeds, tool life, and any problems you are experiencing

_____

_____

Test Objective

List what would make this a successful test (i.e. penetration rate, finish, tool life, hole size, etc.)

_____

_____

Application Information

Hole Diameter: _____ in/mm

Tolerance: _____

Material: _____ (4150 / A36 / Cast Iron / etc.)

Pre-existing Diameter: _____ in/mm

Depth of Cut: _____ in/mm

Hardness: _____ (BHN / Rc)

Required Finish: _____ RMS

State: _____ (Casting / Hot rolled / Forging)

Machine Information

Machine Type: _____ (Lathe / Screw machine / Machine center / etc.)

Builder: _____ (Haas, Mori Seiki, etc.)

Model #: _____

Shank Required: _____ (CAT50 / Morse taper, etc.)

Power: _____ HP/KW

Thrust: _____ lbs/N

Rigidity:
- ☐ Excellent
- ☐ Good
- ☐ Poor

Orientation:
- ☐ Vertical
- ☐ Horizontal

Tool Rotating:
- ☐ Yes
- ☐ No

Coolant Information

Coolant Delivery: _____ (Through tool / Flood)

Coolant Pressure: _____ PSI / bar

Coolant Type: _____ (Air mist, oil, synthetic, water soluble, etc.)

Coolant Volume: _____ GPM / LPM

Requested Tooling

QTY	Item Number

QTY	Item Number

engineering.eu@alliedmachine.com

Allied Machine & Engineering Co. (Europe) Ltd
93 Vantage Point, Pensnett Estate,
Kingswinford, DY6 7FR, United Kingdom

+44 (0)1384 400 900
www.alliedmachine.com

ALLIED MACHINE & ENGINEERING
WOHLHAUPTER®
Holemaking Solutions for Today's Manufacturing

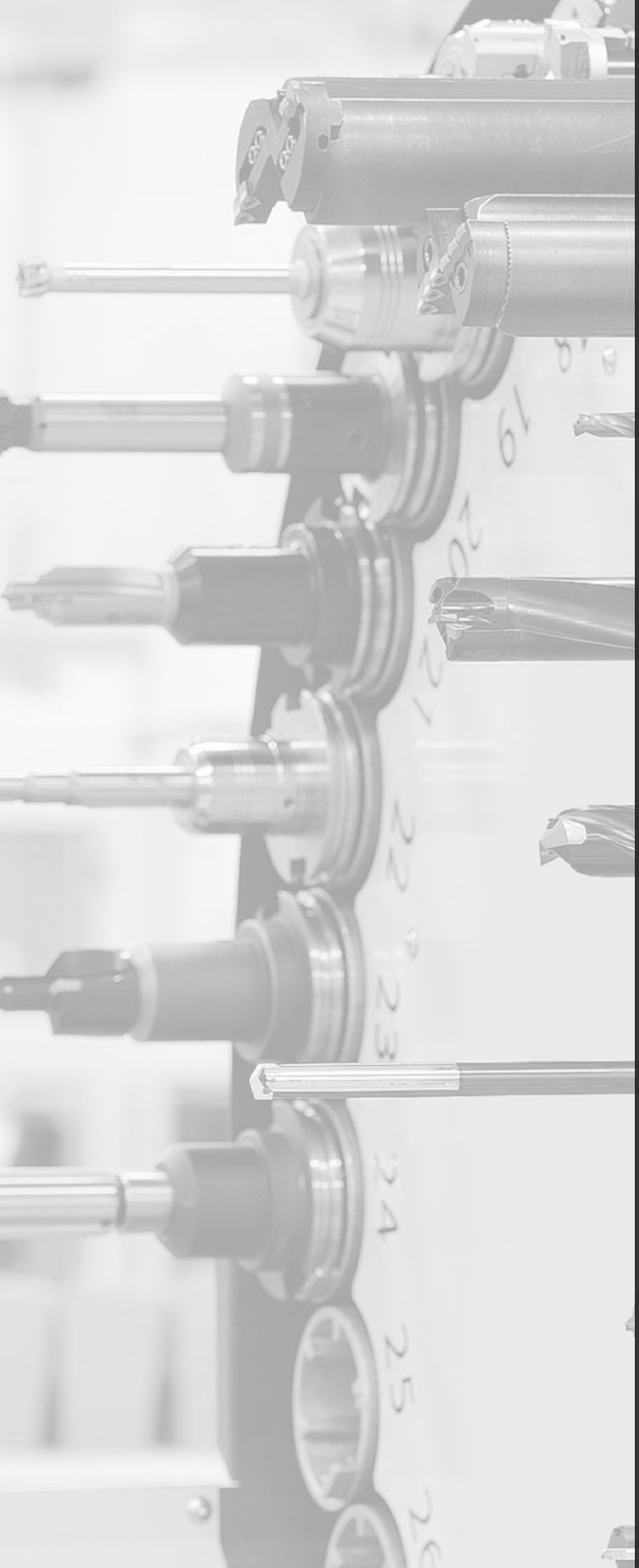

ALLIED MACHINE & ENGINEERING

Warranty Information

Allied Machine & Engineering ("Allied Machine") warrants to original equipment manufacturers, distributors, industrial and commercial users of its products for one year from the original date of sale that each new product manufactured or supplied by Allied Machine shall be free from defects in material and workmanship.

Allied Machine's sole and exclusive obligation under this warranty is limited to, at its option, without additional charge, replacing or repairing this product or issuing a credit. For this warranty to be applied, the product must be returned freight prepaid to the plant designated by an Allied Machine representative and which, upon inspection, is determined by Allied Machine to be defective in material and workmanship.

Complete information as to operating conditions, machine, setup, and the application of cutting fluid should accompany any product returned for inspection. This warranty shall not apply to any Allied Machine products which have been subjected to misuse, abuse, improper operating conditions, improper machine setup or improper application of cutting fluid or which have been repaired or altered if such repair or alteration, in the judgement of Allied Machine, would adversely affect the performance of the product.

THIS WARRANTY IS IN LIEU OF ALL OTHER WARRANTIES, EXPRESS OR IMPLIED, INCLUDING ANY IMPLIED WARRANTY OF MERCHANTABILITY OR FITNESS FOR A PARTICULAR PURPOSE. Allied Machine shall have no liability or responsibility for any claim, whether in contract, tort or otherwise, for any loss or damage arising out of, connected with, or resulting from the manufacture, sale, delivery or use of any product sold hereunder, in excess of the cost of replacement or repair as provided herein.

Allied Machine shall not be liable in contract or in tort (including, without limitation, negligence, strict liability or otherwise) for economic losses of any kind or for any special, incidental, indirect, consequential, punitive or exemplary damages arising in any way out of the performance of, or failure to perform this agreement.

ALL PRICES, DELIVERIES, DESIGNS, AND MATERIALS ARE SUBJECT TO CHANGE WITHOUT NOTICE.

Allied Machine & Engineering Co. Europe Ltd. is registered to ISO 9001:2015 by bsi.

Allied Machine & Engineering is registered to ISO 9001:2015 by DQS

Wohlhaupter GmbH is registered to ISO 9001:2015 by QA TECHNIC

Europe

Allied Machine & Engineering Co. (Europe) Ltd.
93 Vantage Point
Pensnett Estate
Kingswinford
West Midlands
DY6 7FR England

Phone:
+44 (0) 1384.400900

Wohlhaupter GmbH
Maybachstrasse 4
Postfach 1264
72636 Frickenhausen
Germany

Phone:
+49 (0) 7022.408.0

Fax:
+49 (0) 7022.408.212

United States

Allied Machine & Engineering
120 Deeds Drive
Dover OH 44622
United States

Phone:
+1.330.343.4283

Toll Free USA and Canada:
800.321.5537

Fax:
+1.330.602.3400

Toll Free USA and Canada:
800.223.5140

Allied Machine & Engineering
485 W Third Street
Dover OH 44622
United States

Phone:
+1.330.343.4283

Toll Free USA and Canada:
800.321.5537

Fax:
+1.330.364.7666
(Engineering Dept.)

Asia

Wohlhaupter India Pvt. Ltd.
B-23, 3rd Floor
B Block Community Centre
Janakpuri, New Delhi - 110058
India

Phone:
+91 (0) 11.41827044

Your local Allied Machine representative:

www.alliedmachine.com

Allied Machine & Engineering Co. (Europe) Ltd is registered to **ISO 9001:2015** by bsi.

Allied Machine & Engineering is registered to **ISO 9001:2015** by DQS

Wohlhaupter GmbH is registered to **ISO 9001:2015** by QTA TECHNIC

ALLIED MACHINE & ENGINEERING

WOHLHAUPTER®

Holemaking Solutions for Today's Manufacturing

Copyright © 2023 Allied Machine & Engineering Corp. All rights reserved.
All trademarks designated with the ® symbol are registered in the United States and other countries.
Literature Order Number: B10-EU-EN
Print Date: October 2023